R990525

ECL6 - ECL6E - ECL12 - ECL12E

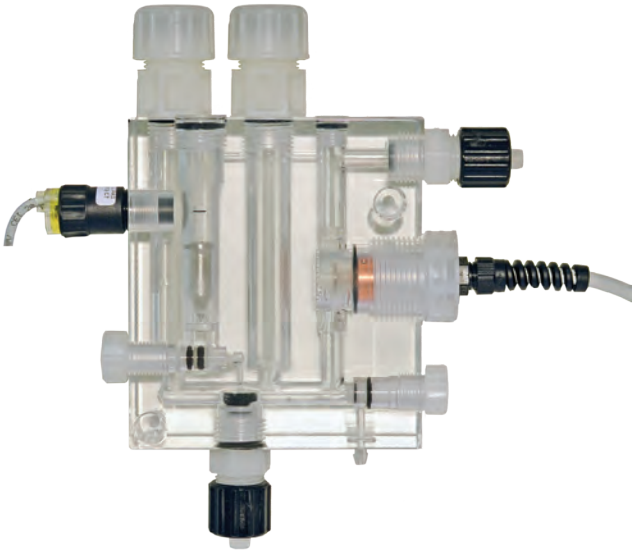

EN

OPERATING MANUAL

OPEN AMPEROMETRIC CELLS

INDEX

GENERAL SAFETY GUIDELINES 3
PURPOSE OF USE AND SAFETY 4
ENVIRONMENTAL SAFETY.....5
SPARE PARTS.....5
INTRODUCTION.....7
Open amperometric cells 7
MODELS 8
Packaging 8
ECL6 9
ECL6/E 9
ECL12 10
ECL12/E 10
Operating principle 11
Precautions 11
Installation 12
pH/ORP/temperature probes installation 13
Commissioning..... 13
Electrode replacing 14
Electrode cleaning 14
Calibration 15
Decommissioning 15
MAINTENANCE 16
Maintenance schedule..... 16
Maintenance inspection 16
Calibration procedure 16
TROUBLESHOOTING 17
Repair service..... 17
ECL6 18
ECL6/E 19
ECL12 20
ECL12/E 21

This operating instructions contains safety information that if ignored can endanger life or result in serious injury.
The original instruction is in English.

Read these instructions **carefully** before use and keep them for future reference.

Information and specifications on this manual could be uncorrect or could have printing errors. Specifications are subject to change without notice.

Version: R1-02-17

D.M. 7 Febbraio 2012 n.25 – D.M.6 Aprile 2004 n.174 – Regolamento UE 10/2011
Apparecchiature finalizzate al trattamento dell'acqua destinata al consumo umano/
Equipment intended to come into contact with food/
Materiales y objetos plasticos destinados a entrar en contacto con alimentos.

GENERAL SAFETY GUIDELINES

Operating, installing, or maintaining the unit in any way that is not covered in this manual could cause death, serious personal injury, or damage to the equipment.

ICON

This manual use the following safety message icon:

Danger!
Indicates a hazardous situation which, if not avoided, will result in death or serious injury.

Warning!
Indicates a hazardous situation which, if not avoided, could result in death or serious injury.

Important - A practice not related to personal injury or additional information.

Cross reference - An instance which refers to related information elsewhere in the same document

PURPOSE OF USE AND SAFETY

EQUIPMENT INTENDED FOR THE MEASUREMENT OF CHLORINE IN WATER.

Do not use in explosive area (EX).
Do not use with flammable chemicals.
Do not use with radioactive chemicals.

Use the equipment in accordance with the data and specifications printed on the label.

Do not modify or use in a manner inconsistent with the provisions of the operating manual.

⚠ **When using this product with aggressive chemicals observe the regulations concerning the transport and storage of aggressive fluids.**

⚠ **When installing always observe national regulations.**

⚠ **Manufacturer is not liable for any unauthorized use or misuse of this product that may cause injury, damage to persons or materials.**

⚠ **Probes must be serviced and repaired by qualified and authorized personnel only.**

⚠ **Before any operation:**
- **always read chemical Material Safety Data Sheet (MSDS);**
- **always wear protective clothing;**
- **empty and rinse the liquid end before work on a the product which has been used with hazardous or unknown chemicals.**

⚠ **Avoid grinding / shock / falls / friction.**

Environmental safety

Work area

Always keep the area clean to avoid and/or discover emissions.

Recycling guidelines

EWC code: 16 02 16

Always recycle according to these guidelines:
1. If the unit or parts are accepted by an authorized recycling company, then follow local recycling laws and regulations.
2. If the unit or parts are not accepted by an authorized recycling company, then return them to the nearest representative.

Waste and emissions regulations

Observe these safety regulations regarding waste and emissions:
- Dispose appropriately of all waste.
- Handle and dispose of the dosed chemical in compliance with applicable environmental regulations.
- Clean up all spills in accordance with safety and environmental procedures.
- Report all environmental emissions to the appropriate authorities.

Spare parts

For spare parts orders or any other communication, refer to the pump's label.
Code (CODE) and serial number (P / N) uniquely identify the probe.

Transportation and storage

An unsuitable transportation or storage can cause damages.

Use original box to pack the amperometric cell.

Observe storage conditions also for transportation.

Although packed, always protect the unit against humidity and the action of chemicals.

Before returning the probe to the manufacturer repair service, refer to Decommissioning.

DO NOT DISCARD PACKAGING. USE IT TO RETURN THE PROBE.

Storage

To store the probe refer to Decommissioning.

1. Clean the electrode, refer to Cleaning procedure.

2. Store the probe in the original box, protected against sun, chemicals and humidity.

Transportation and storage temperature ..... +10°C - +50°C (+32°F - +122°F)
Humidity ..... 95% relative humidity (not condensed)

INTRODUCTION

Open amperometric cells

ECL Series is designed for measuring free chlorine (both organic and inorganic).
Open amperometric cells comprise an Off-line probe holders, a sensing electrode and a flow electrode. Probe holders can contain up to three probes (temperature, pH and ORP).

The flow of water within this cell must remain constant and within 40 l/h. A pressure stabilizer is available for areas subject to sudden pressure changes.

It is recommended to instal a filter before the probe holder.

Suitable for non-clean water thanks to the presence of cleaning balls.

Fig. 1. Description

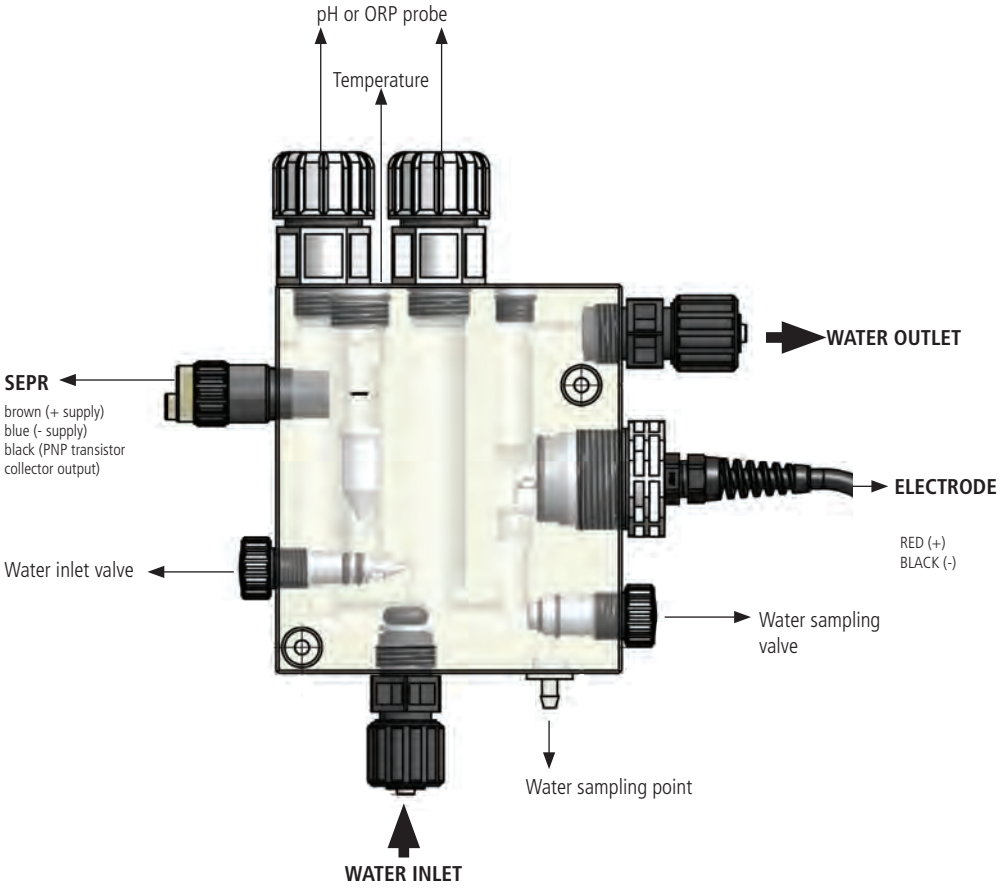

MODELS

- ECL6 for free chlorine (organic and inorganic) - pH and ORP probe-holder
- ECL6/E for free chlorine (organic and inorganic)
- ECL12 for free chlorine (organic and inorganic) for salt water - pH and ORP probe-holder
- ECL12/E for free chlorine (organic and inorganic) for salt water

Packaging

Packaging includes:

- AMPEROMETRIC CELL
- COD. 11070081: KIT SCREW + WASHER +SCREW COVERS
- COD. 11067291: STANDARD KIT (1/2" PP+FP NIPPLE; 1/2" PVC GREY BALL VALVE M/M; FLAT GASKET 1/2" F 1/4" M EPDM)
- COD. 02502121: 1/2" 6X8 HOSE HOLDING KIT FOR BLACK PP VALVE
- 4 MT 6X8 PE HOSE

ECL6
ECL6/E

	ECL6	ECL6/E
Parameter	FREE CHLORINE (ORGANIC AND INORGANIC) / BROMINE	
Measuring range	0-10 mg/l (0-10 ppm) resolution: ± 0.05	
Connection	2 wires (+red; -black)	
Measuring system	amperometric - 2 electrodes (platinum/copper; on request gold/copper)	
Ph working range	6-8 pH	
Run-in-time	First polarization: 2 h about Next polarizations: 50 min. about	
Response time	T_{90}: 2 min. about	
Zero point adjustment	See Operating manual: "Calibration"	
Alcalinity	100 ppm	
Working temperature	5-40° C (41-104°F)	
Pressure	0.4 - 5 bar (5.8 - 72.5 PSI)	
Cable (standard)	2 m (6.6 ft); 1 m if assembled on panel	
Working flow	40 l/h	
Suitable as probe holder for	pH, ORP and temperature	temperature
Fittings for connection to the sample pipeline	6x8	
Material	Electrode: platinum/copper Measurement cell: metacrylate (PMMA)	
Mounting	On flat vertical surface (panel, support, etc.).	
Storage	Frost and dry protected (5-40° C)	
Maintenance	Regular control of the signal SHORTEN THE MAINTENANCE INTERVALS APPROPRIATELY DEPENDING ON WATER QUALITY.	

ECL12
ECL12/E

	ECL12	ECL12/E
Parameter	FREE CHLORINE (ORGANIC AND INORGANIC) FOR SALT WATER	
Measuring range	0-10 mg/l (0-10 ppm) resolution: ± 0.05	
Connection	2 wires (+red; -black)	
Measuring system	amperometric - 2 electrodes (platinum/silver)	
Ph working range	6-8 pH	
Run-in-time	First polarization: 2 h about Next polarizations: 50 min. about	
Response time	T_{90}: 2 min. about	
Zero point adjustment	See Operating manual: "Calibration"	
Slope calibration	See Operating manual: "Calibration"- DPD1 method	
Alcalinity	100 ppm	
Working temperature	5-40° C (41-104°F)	
Pressure	0.4 - 5 bar (5.8 - 72.5 PSI)	
Cable (standard)	2 m (6.6 ft); 1 m if assembled on panel	
Working flow	40 l/h	
Suitable as probe holder for	pH, ORP and temperature	temperature
Fittings for connection to the sample pipeline	6x8	
Material	Electrode: platinum/silver Measurement cell: metacrylate (PMMA)	
Mounting	On flat vertical surface (panel, support, etc.).	
Storage	Frost and dry protected (5-40° C)	
Maintenance	Regular control of the signal SHORTEN THE MAINTENANCE INTERVALS APPROPRIATELY DEPENDING ON WATER QUALITY.	

Operating principle

ECL amperometric cells have an amperometric measuring system.
Measurement method is an electrochemical technique: the two electrodes (platinum and copper, or platinum and silver) produces a current directly proportional to the concentration of chlorine.

Precautions

Before any operation (preparation, cleaning and replacements) and before handly the amperometric cell you MUST FOLLOW these PRECAUTIONS.

⚠ DANGER

AUTHORIZED AND QUALIFIED PERSONNEL
Installation and maintenance tasks should be carried out by AUTHORIZED AND QUALIFIED PERSONNEL only in accordance with local regulations.

⚠ DANGER

WEAR UNPOWDERED NITRILE GLOVES.
Avoid contact of the electrolyte with the skin.
In case of contact with skin, rinse immediately with plenty of water.

⚠ DANGER

WEAR EYE PROTECTION
Avoid contact of the electrolyte with the eyes.
In case of contact with eyes, rinse immediately with plenty of water and seek medical advice.

Installation

1. Secure amperometric cell on a stable wall by screwing the two fixing screws on the body of the amperometric cell (⎘ Dimensional).
2. Connect water inlet and outlet to the pipe.
3. We recommend the installation of a filter before the amperometric cell.
4. Install pH, ORP and temperature probes (if any) in their seats.
5. Connect SEPR and electrode to the instrument terminal board (refer to the manual of the instrument).

Fig. 2. Amperometric cell installation

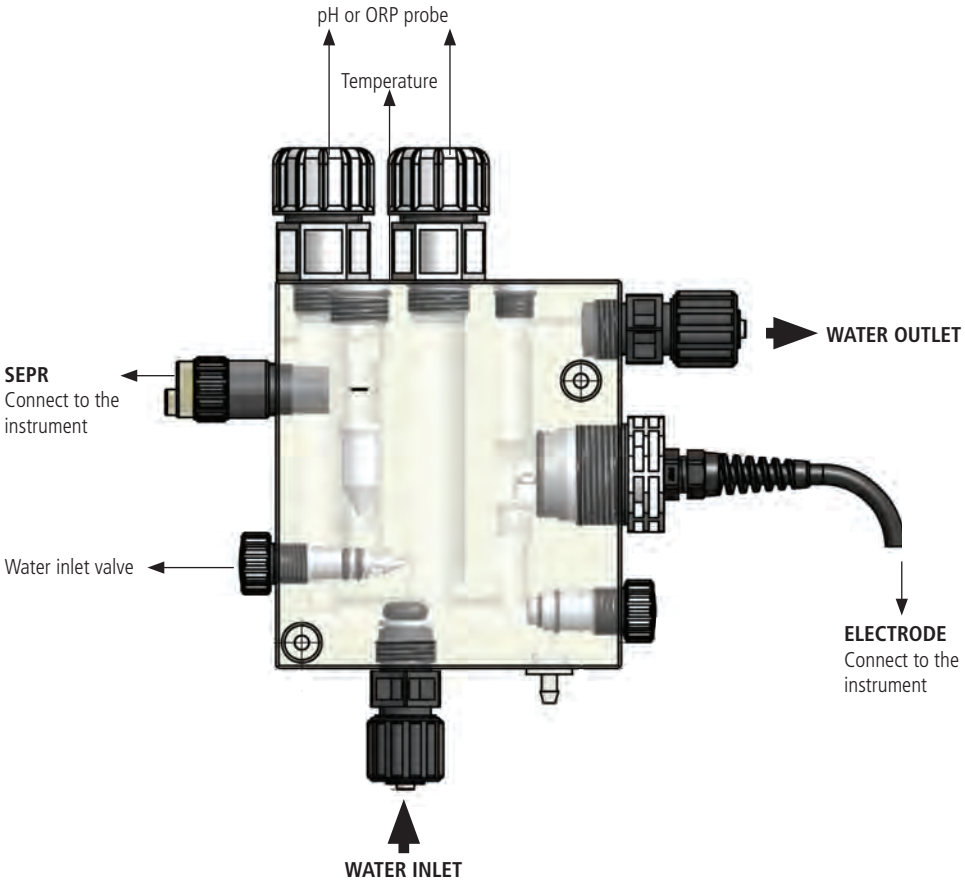

pH/ORP/ temperature probes installation

Referring to the drawing below, follow the assembly sequence.

Fig. 3. pH, ORP, temperaure porbes installation.

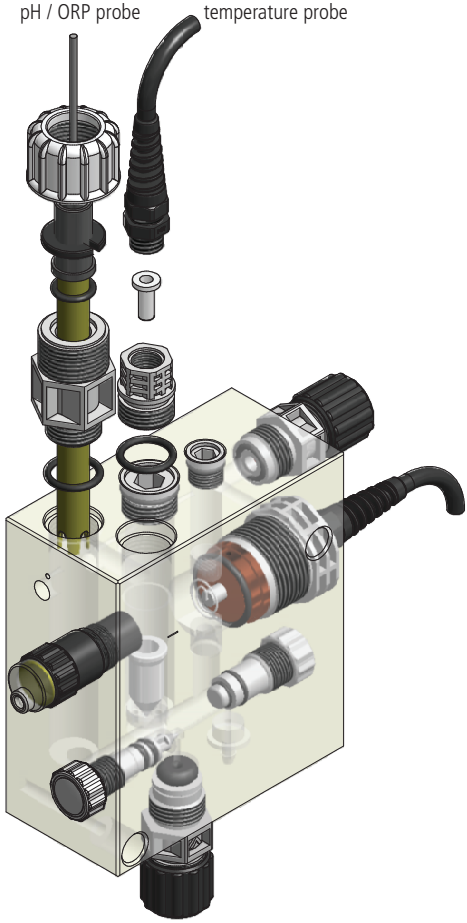

Commissioning

1. Open water flow into the cell turning water inlet valve.
2. Turn until the float reaches the black mark on the cell.
3. SEPR LED lights to indicate the proper flow into the cell.

Fig. 4. Correct float position

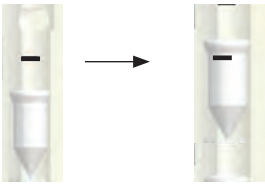

Electrode replacing

DANGER
AUTHORIZED AND QUALIFIED PERSONNEL

Installation and maintenance tasks should be carried out by AUTHORIZED AND QUALIFIED PERSONNEL only in accordance with local regulations.

DANGER
POWER SUPPLY DISCONNECTION

Always disconnect power to the equipment before you perform any installation or maintenance tasks. Failure to disconnect power will result in serious physical injury.

1. Follow precautions described in paragraph "Precautions".
2. Close water inlet valve.
3. Disconnect electrode's wirings on the instruments terminal (refer to the manual of the instrument).
4. Unscrew the screw at the top right that secures the amperometric cell to the wall / panel.
5. Pivoting on bottom left screw, gently rotate the cell to the left approximately 30 degrees so as not to fall outside the cleaning balls.
6. Unscrew the electrode and replace it with a new one or clean as specified in paragraph "Electrode cleaning".
7. Screw electrode in its seat.
8. Tighten right screw onto the amperometric cell in order to secure it on the wall / panel.
9. Reconnect wires on the instrument terminal (refer to the manual of the instrument).
10. Proceed to the calibration of amperometric cell.

Electrode cleaning

To clean electrode, follow from step 1 to 6 of paragraph "Electrode replacing", then

1. Unscrew electrode.
2. Clean the copper with a cotton ball soaked in acid solution, gently rub with a fine-grain abrasive paper and rinse with water.
3. Screw electrode in its seat.
4. Reconnect wires on the instrument terminal (refer to the manual of the instrument).
5. Proceed to the calibration of amperometric cell.

DANGER
Do not USE alcohol to clean the amperometric cell.

Calibration

Perform calibration of amperometric cell on a monthly basis or more, if necessary.
Amperometric cell must be calibrated with the instrument to which it is connected.
Calibration is carried out on two points: 0 and a second point near the work value.
For calibration procedure refer to the manual of the instrument.

Decommissioning

Decommission the cell before any maintenance operation, shipping and long downtimes.

DANGER
AUTHORIZED AND QUALIFIED PERSONNEL
Installation and maintenance tasks should be carried out by AUTHORIZED AND QUALIFIED PERSONNEL only in accordance with local regulations.

DANGER
POWER SUPPLY DISCONNECTION
Always disconnect power to the equipment before you perform any installation or maintenance tasks. Failure to disconnect power will result in serious physical injury.

1. Disconnect power supply.
2. Stop water feeding by turning water inlet valve.
3. Keep a basin under sampling point and open water sampling valve to drain the liquid inside.
4. Disconnect electrode's wirings on the instruments terminal (refer to the manual of the instrument) and uscrew electrode (keep cleaning balls in a basin).
5. Disconnect hydraulic connections.
6. Unscrew amperometric cell from panel / wall.
7. Unscrew SEPR:
8. Wash the PMMA body from chlorine residues.
9. Air dry.

Maintenance schedule

DANGER
MAINTENANCE SCHEDULE
In order to ensure the requirements of potable drinking water treated and the maintenance of the improvements as declared by the manufacturer, this equipment must be checked at least once a week.

DANGER
OPERATOR PROTECTION
Use safety equipment according to the company regulations.
Use this safety equipment within the work area during installation, service and when handling chemicals:

- protective mask
- unpowdered nitrile gloves
- safety goggles
- further security device, if necessary.

DANGER
POWER SUPPLY DISCONNECTION
Always disconnect power to the equipment before you perform any installation or maintenance tasks. Failure to disconnect power will result in serious physical injury.

DANGER
AUTHORIZED AND QUALIFIED PERSONNEL
Installation and maintenance tasks should be carried out by AUTHORIZED AND QUALIFIED PERSONNEL only in accordance with local regulations.

IMPORTANT
Use original spare parts.

Maintenance inspection

INTERVAL	MAINTENANCE INSPECTIONS	REFERENCE
Weekly	Check probe reading (DPD1 or colorimetric method)	Calibration procedure
Monthly	Check electrical wiring and cable	-
Periodically	Check electrode	Cleaning procedure

Shorten the inspection intervals appropriately if necessary.

TROUBLESHOOTING

PROBLEM	CAUSES	SOLUTIONS
Sensor cannot be calibrated and measured value greater than DPD measurement	Run-in period too short	Observe the run-in period
	Troublesome substances in the water	Check water for troublesome substances and contact supplier
	Short circuit in the measuring line	Identify short circuit and eliminate the cause. Contact supplier
	Electrode is dirty	Clean or replace electrode
Sensor measured value is unstable	Dirty / damaged electrode	Clean or replace electrode
	Unstable pressure	Check installation
Nessun segnale di lettura	Insufficient flow into the cell	Check correct position of the float. If necessary, open water flow into the cell
	Desoldering wires in the electrode cable	Contact supplier
	Black and red wires reversed	Check for proper connection of the wires on the instrument terminal

Repair service

Before return the amperometric cell to the manufacturer Repair service, follow ⎘ Decommisioning procedure.
If there is the possibility that residual corrosive liquid into pump head could cause damages, declare it on REPAIR FORM.

Complete the PRODUCT SERVICE REPAIR FORM and send it with the amperometric cell.
Repair service is not accepted if PRODUCT SERVICE REPAIR FORM is missing.

ECL6

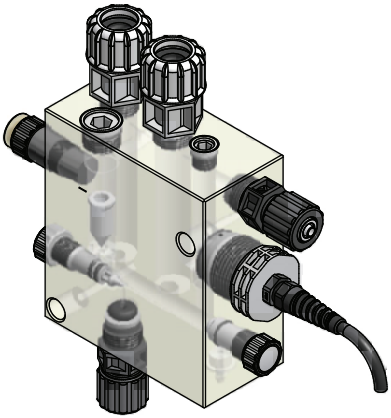

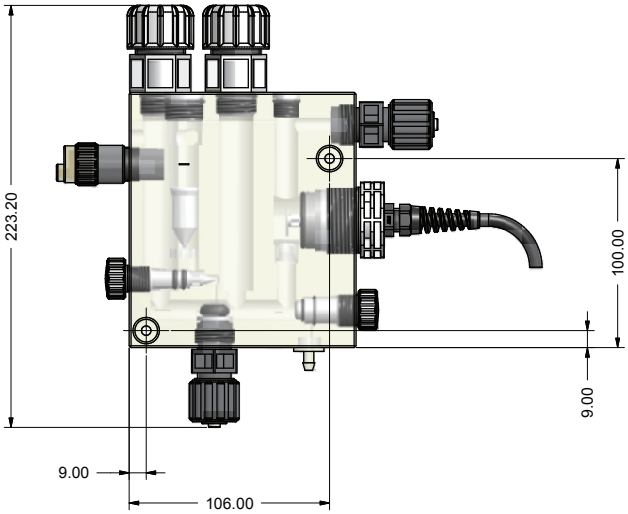

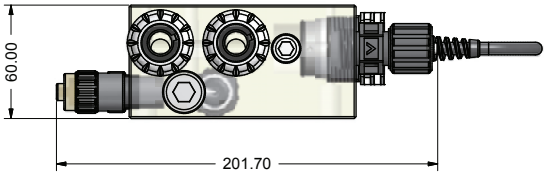

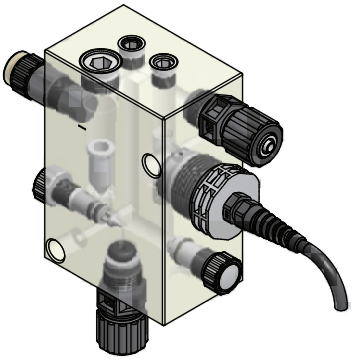

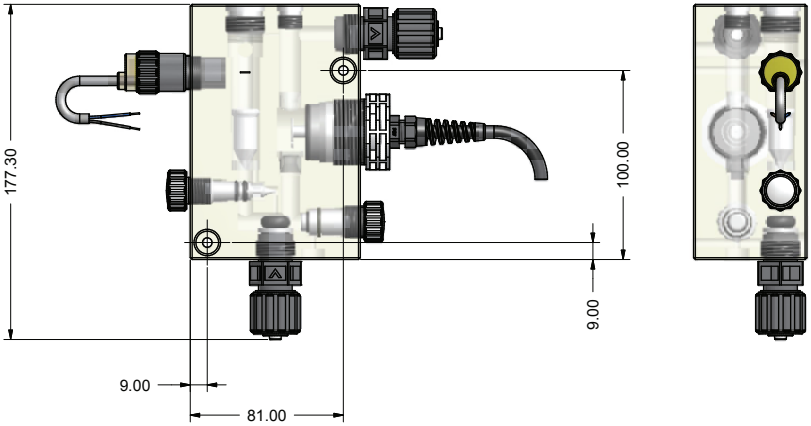
177.30
100.00
9.00
9.00
81.00

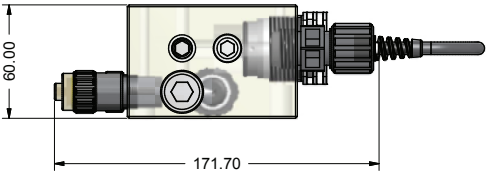
60.00
171.70

DIMENSIONS

ECL12

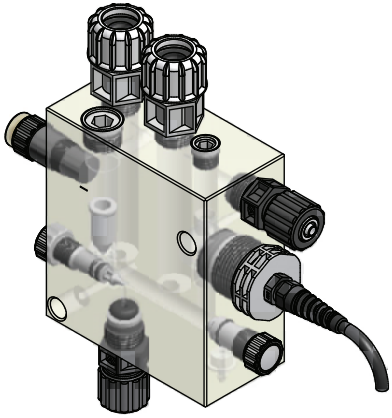

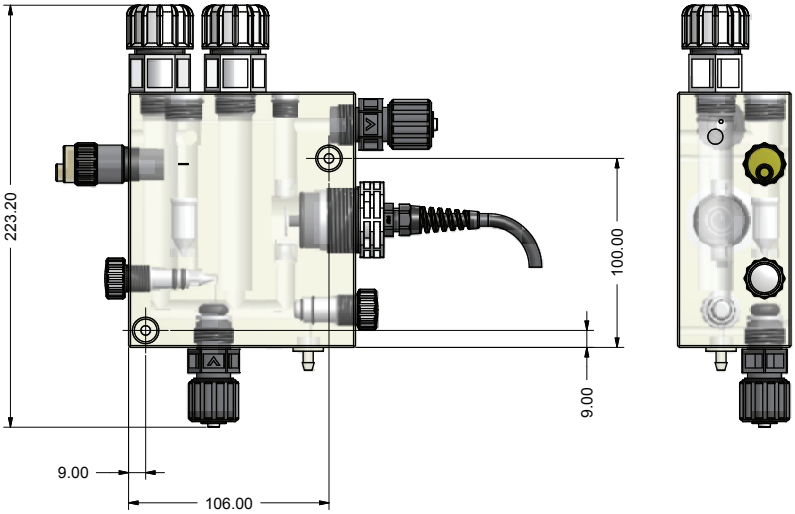

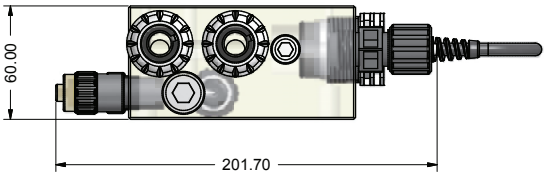

ECL12/E

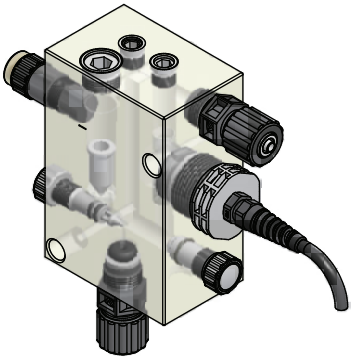

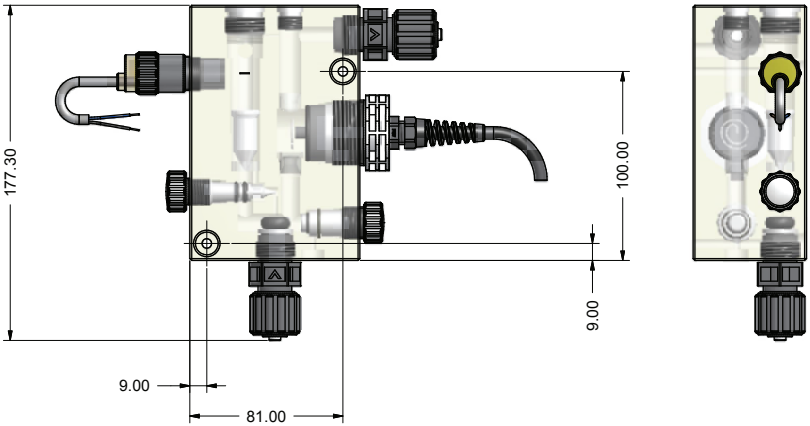

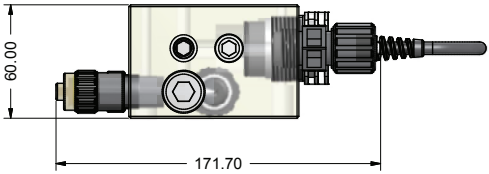

PRODUCT SERVICE REPAIR FORM

ENCLOSE THE PRESENT FORM TO THE DELIVERY NOTE

DATE .....

SENDER

Company name.....

Address .....

Phone no. .....

Contact person.....

PRODUCT TYPE (see product label)

DEVICE CODE .....

S/N (serial number).....

OPERATING CONDITIONS

Location/installation description .....

.....

Chemical .....

Start-up (date) ..... Running time (approx. hours).....

REMOVE ALL THE LIQUID AND DRY IT BEFORE PACKAGING IN ITS ORIGINAL BOX.

DESCRIPTION OF PROBLEM

☐ MECHANICAL

Wear parts.....

Brekage/other damages .....

Corrosion.....

Other.....

☐ ELECTRICAL

Connections, connector, cables .....

Other.....

☐ NOT OR INADEQUATE FUNCTION/OTHER

.....

.....

.....

I declare that the product is free of any hazardous chemical.

Signature of the compiler

Company stamp

PRECAUTIONS RELATING TO DIRECTIVES, REGULATIONS AND STANDARDS

§ CE/EU and UKCA marking

We guarantee that this product meets the essential requirements of the applicable Directives and Regulations based on the following specifications. Please carefully consider the following specifications for use of the product in European Union member countries and the United Kingdom.

• CE/EU harmonized directives and standards

Directives

DIRECTIVE 2014/30/EU
DIRECTIVE 2011/65/EU
DELEGATED DIRECTIVE (EU) 2015/863

Harmonized standards

EN ISO 12100
EN IEC 61326-1
EN IEC 63000

• UKCA harmonized regulations and standards

Regulations

2008 2016 No. 1091
2012 No. 3032

Harmonized standards

BS EN ISO 12100
BS EN IEC 61326-1
BS EN IEC 63000

Disposal of end-of-life equipment by users

This symbol warns you not to dispose of the product with normal waste. Respect human health and the environment by giving the discarded equipment to a designated collection center for the recycling of electronic and electrical equipment. For more information visit the online site.

When dismantling a pump please separate material types and send them according to local recycling disposal requirements. We appreciate your efforts in supporting your local Recycle Environmental Program. Working together we'll form an active union to assure the world's invaluable resources are conserved.