This manual contains important information about safe installation and operation of the unit. Strictly comply with this information to avoid harming people or damaging property.

It is strictly prohibited to use this equipment with radioactive chemicals!

Before switching this instrument on, read this manual in its entirety.

Keep the manual near the instrument for future reference

ERMES COMMUNICATION
www.ermes-server.com

OPERATING INSTRUCTIONS FOR THE "LOTUS AIR" SYSTEM

Il biossido di cloro, come tutti gli agenti ossidanti, potrebbe produrre fenomeni di corrosione dell'impianto. Si consiglia di effettuare verifiche cadenzate e di trattare l'impianto con prodotti chimici specifici. Si consiglia, inoltre, di utilizzare nel punto d'iniezione del prodotto materiali resistenti al biossido di cloro.

Chlorine dioxide, like all oxidizing agents, could produce corrosion phenomena of the plant. It is advisable to perform cadenced checks and to treat the plant with specific chemical products. It is also advisable to use chlorine dioxide resistant materials at the point of injection of the product.

Le dioxyde de chlore, comme tous les agents oxydants, pourrait produire des phénomènes de corrosion de l'installation hydraulique. Il est conseillé d'effectuer des contrôles cadencés et de traiter l'installation avec des produits chimiques spécifiques. Il est également conseillé d'utiliser des matériaux résistants au dioxyde de chlore au point d'injection du produit.

Read carefully!

ENGLISH edition

R070426

This manual contains important information about SAFE installation and operation of the unit. Read and retain for future reference.

Strictly comply with this information to avoid harming people or damaging property.

The information contained in this manual may contain inaccuracies or typographical errors.

The information contained in this manual is subject to change at any time without prior notice.

Descrizione Prodotto
Product Description

Sistemi di disinfezione, serie LOTUS AIR
Disinfection systems, LOTUS AIR series

Codici Identificativi Prodotto
(i simboli "_" completano il codice del prodotto in base alla configurazione delle varianti)
Product Identification Codes
(the "_" symbols complete the product code based on the configuration of the variants)

112 _ _ _ _ 1 _ _ B

GENERAL NOTES ON SAFETY

During installation, testing and inspection it is mandatory to comply with the following management and safety instructions.

	LOTUS AIR 10	LOTUS AIR 30	LOTUS AIR 60
ClO_2 max capacity (g/h)	10 g/h	30 g/h	60 g/h
ClO_2 max capacity (g/day)*	240 g/die	720 g/die	1440 g/die
Max chemicals consumption (l/h)	0,250 l/h (HCl) 0,250 l/h ($NaClO_2$)	0,750 l/h (HCl) 0,750 l/h ($NaClO_2$)	1,5 l/h (HCl) 1,5 l/h ($NaClO_2$)
Dilution water consumption (l/h)	5 l/h	15 l/h	30 l/h
Max pressure (feed water)	2 bar	3 bar	3 bar
Max pressure delivery pump (bar)	8 bar	5 bar	5 bar
Concentration (g/l)	2 g/l		
Power supply	230 VAC (190-265 VAC) 115 VAC (90-135 VAC)		
Average power consumption (W/h)	60		
Weight Kg	60	90	90

* Max capacity (gr/day) is referred to a 100% capacity / 24h.

Safety

This manual contains basic instructions for installation, operation and maintenance. It is therefore mandatory for the installation technician and the equipment administrator to study the entire manual prior to installing and commissioning. The manual must be found near the generator at all times. It is also mandatory for the operator to consider the general rules listed in the "Safety standards" chapter as well as the specific safety instructions in the other chapters of this manual.

Warning

Some of the functions described below may require other accessories (not included in the "LOTUS AIR" supply). Some of the features described may not be available with the "LOTUS AIR" software release purchased. Or some functions are available but not described in this manual. In this case, contact your dealer for more information.

Symbols

In accordance with the European guidelines concerning the characterisation of special risks, all safety instructions in this manual are marked with the following symbols:

Danger

This symbol draws attention to the risks that may be encountered.
Failure to comply can lead to serious consequences for personal safety and damage to property.

Attention

This symbol draws attention to the problems that can be caused by incorrect equipment operation.

Additional notes

This symbol indicates additional important information.

PART ON THE DOSING PUMPS IN THE "LOTUS AIR" SYSTEM

Attention

The pump must only be used for dosing liquid products.
It should not be used in explosive atmospheres (EX).
It should not be used to dose flammable chemicals.
It should not be used with radioactive chemicals.

Use the pump only after installation.

Use the pump in accordance with the data and technical specifications on the label.

Do not modify or use differently from that indicated in the user manual.

Additional notes

Keep the pump protected from sun and rain. Avoid splashing water.

The power to the system must be immediately disconnected and the pump disconnected from the electrical outlet during any emergency within the environment where the pump is installed.

If you use particularly aggressive chemicals strictly comply with the regulations concerning their use and storage.

Always comply with local safety regulations.

The manufacturer of the dosing pump cannot be held liable for damage to persons or property caused by incorrect installation, improper or incorrect use of the dosing pump!

Install the dosing pump so that it is accessible at all times for maintenance purposes.
Do not block the dosing pump area!

The unit must be controlled by an external control system. Dosing must be interrupted if there is no water.

Assistance and maintenance of the dosing pump and all its accessories must always be performed by qualified pe sonnel.

Before any installation and maintenance:

- **carefully read the chemical characteristics of the product to be dosed and refer to the Safety Data Sheet of the product;**
- **wear the most suitable PROTECTIVE EQUIPMENT;**
- **drain the connection hoses of the dosing pump;**
- **carefully wash the hoses that have been used with particularly aggressive materials.**

General safety regulations

The manual describes the proper use of the "LOTUS AIR" generator.

Danger

Improper use of the generator compromises its safety function and that of the other devices connected to it and therefore such use is strictly forbidden.

Installation and maintenance must only be carried out by authorised technicians.

Maintenance repairs should only be carried out only by the manufacturer or by technicians authorised by the manufacturer. Interventions or alterations to the device that are not in accordance with the provisions of this manual, with respect to regular maintenance, shall be considered improper and render any product warranty null and void.

The operator is responsible for compliance with safety-related local regulations.

The device must be accessible at any time for operation and maintenance.

Before activating the dosing pumps, remove the pressure from the pump heads.

Before starting maintenance, drain and thoroughly wash the tested pumps.

Pay attention to the chemical safety data sheets!

Wear protective clothing when you must handle unknown or hazardous chemicals.

Additional notes

For proper compliance with European regulations concerning the use of this equipment with hazardous chemicals, refer to EU directives DIN 939 (HYDROCHLORIC ACID) and DIN 938 (SODIUM CHLORITE)

Operating safety instructions

Danger

Strict compliance with all national and local regulations is required when using the "LOTUS AIR" generator. The operator is responsible for compliance with safety-related local instructions.

The generator must be installed and operated in accordance with the instructions in this manual.

It is forbidden to use installation materials that are not approved by the manufacturer or supplier.

The generator can only be used with appropriate safety valves approved by the manufacturer. Failure to comply with this rule leads to be loss of the right to any kind of warranty!

Before operating the system, turn off the pressure from all parts of the system.

The system must never work with the valves closed as there lies the risk of the flexible hoses or rigid hoses bursting.

Disconnect the power supply before opening the controller container.

Pay attention to all the national regulations during installation.

Additional notes

The system must not be installed outdoors.

The system must be protected from unauthorised access.

The place where the unit is installed must be protected from direct sunlight and frost and should be well ventilated.

Places with temperatures below 10°C must be provided with appropriate systems that enhance the temperature.

It must be possible to transport the chemical containers to the system without any restriction.

An emergency exit is strictly required!

The system must be mounted on a vertical solid wall without stress and the dioxide pipe must be anchored to avoid damage.

The system must be mounted in such a way as not to cause vibrations.

Make sure free access from all sides is possible for operation and maintenance!

A valve and an attachable floor draining duct must be set up for any spilled chemicals to be eliminated without any risk.

Safety regulations in case of chemical spills I

Danger

If the odour of chlorine dioxide (a penetrating odour similar to that of chlorine) can be smelt, access is allowed only with the required personal protective equipment.

If the odour of chlorine dioxide is smelt, immediately turn off the system from a safe position, for example with an emergency stop switch away from the system

In rare error cases, the hazardous ClO_2 solution can leak. For example, install a gas detector that disables the system in case of a leak of ClO_2 and triggers an alarm that is recognised at a distance.

When using hazardous substances, keep in mind that their latest safety data sheets provided by the manufacturers are available. The safety data sheets indicate the measures to be adopted. Since the risk potential of a substance can be evaluated at any time based on newly learnt knowledge, the safety data sheet should be checked regularly and replaced if necessary.

The system administrator is responsible for the availability of the updated version of the safety data sheet and the preparation of the risk assessment of the relative workstations.

The administrator generates hazardous substances with this system.

The administrator is obliged to adjust the operating instructions according to the system if any recent knowledge concerning the risks of a particular hazardous substance is learnt and must include how to avoid them or if national regulations contain different provisions from those specified in the instruction manual supplied.

Safety regulations in case of chemical spills II

Attention

The following personal protective equipment is required to access the "LOTUS AIR" device

Face shield
Rubber or plastic boots
Protective gloves (ClO_2 sealed model)
Protective apron
Full face respirator

The composition and the type of personal protective equipment required may vary from one country to another and change over time.

Danger

If you come in contact with the acid: See the "Acid CE safety data sheet" of the supplier.

If you come in contact with the chlorite: See the ''Chlorite CE safety data sheet'' of the supplier.

If you come in contact with the ClO_2 solution or the ClO_2 gas: immediately remove the clothes that have come in contact with the chlorine dioxide or with the liquid solution, wash the skin thoroughly with soap and plenty of water. Splashes in the eye must be washed with running water for several minutes while keeping the eyelid wide open. If you have inhaled chlorine dioxide move to a place where there is fresh air, lying down in a position of absolute rest and protected from temperature changes. Consult a doctor immediately even if the affects do not appear immediately. If necessary, organise rapid transport to the hospital.

Orange-yellow ClO_2 gas has leaked: immediately clear the environment and disconnect the power supply, for example, from the emergency stop switch. Use complete protective equipment and water spray for the gas to settle.

Orange-yellow ClO_2 solution has leaked: immediately clear the environment and disconnect the power supply, for example, from the emergency stop switch. Wear protective equipment and pour a ClO_2 sodium thiosulphate solution then dilute with water and eliminate into the drain.

An incorrect dilution or with concentrated HCl in the HCl tank and with dosing pumps that have already pumped the concentrated chemicals to the reactor: immediately clear the environment and disconnect the power supply, for example, from the emergency stop switch. Alert the fire department and inform them of the risk of explosion due to concentrated ClO_2. The ClO_2 gas can explode even after hours!

Storage, transport and repairs

Additional notes

In case of repairs, return the unit after having cleaned it and having washed the hydraulic components. Attach the material decontamination declaration to be sent for repairs.

The unit can be damaged due to non-compliant storage or transport.

Store or transport the unit adequately packed, preferably in its original packaging.

Always follow the storage conditions when transporting or storing, even when the unit is packed.

Although packed, always protect the unit from moisture and the action of chemicals.

Introduction & First Start

The chlorine dioxide generator named "LOTUS AIR" is used to produce liquid chlorine dioxide. This disinfectant kills all bacteria, germs, viruses and fungi very rapidly and works at very low concentration. The generator works according to the hydrochloric acid - chlorite process and uses diluted chemicals such as hydrochloric acid (HCl 9%) and sodium chlorite ($NaClO_2$ 7.5%) in accordance with the following chemical formula:

Hydrochloric acid + Sodium chlorite = Chlorine dioxide + Sodium chlorite + Water

$$4\ HCl + 5\ NaClO_2 = 4\ ClO_2 + 5\ NaCl + 2\ H_2O$$

In the process, each chemical is pumped with a certain proportion in a reactor, which does not work pressurised, by means of two dosing pumps. Within the reactor, the chemicals react with each other generating chlorine dioxide. Adding water for dilution it produces a final concentration of 2000ppm of ClO_2 into storage tank and a 10gr/h, 30gr/h or 60gr/h (based on purchased model) of production. The chlorine dioxide can be pumped directly into the pressurised systems at the pressure of the pumps and similarly in the storage tanks if there is no pressure, to distribute the disinfectant to the various points of use. The system can work proportionally with a contact water meter, a current signal or measurement of chlorine dioxide.

FIRST START

The power cable located behind the main controller powers the entire panel, including pumps. For the first start-up and the hydraulic check it is necessary to **use FRESH WATER instead of chemical products** by inserting the suction lances into a water container. Refer to the numbering in the diagram on page 11.

1) Check that **continuous fresh water** is available to the Solenoid valve inlet (9) then open the inlet tap.

2) Check that the pressure reducer has been installed upstream of the solenoid valve (9), set it to 2bar max (LOTUS10gr version) or to 3bar max (LOTUS 30gr and 60gr versions)

3) Check that on the multifunction valve (5) the injection valve is installed and connected to the injection point.

4) Check that the injection valve is present at the injection point.

5) Connect the cables of the suction lance levels (check colors for acid and chlorite) to the instrument and the suction part to the pumps (acid and chlorite).

6) Check that the purging of the pumps is connected to the suction lances (side connector).

7) If PEF (12) is available for reading the dioxide value by means of a probe, check that the water withdrawal point is installed in the delivery by the recirculation pump and check that the probe holder output is in "drain" or re-introduced into plant.

8) If the PEF (12) is available, prepare the dioxide probe with cleaning kit (hot water version) or with the membrane (cold water version). Follow the probe instructions.

9) Check that the reaction and storage tanks (6 and 10) are empty by opening the drain tap (11) and setting to ON the motorized valve (7) through the "EV Emptying" from the controller. To set this function, turn the instrument on, press and immediately release the knob to access the output management menu.

10) Close the drain tap and close the motorized valve ("EV emptying") from the controller.

11) To start production, return to the instrument main screen. The EV (9) will let water flow into the reactor (6), the acid pump and the chlorite pumps will start to dose. Once the reaction in the reactor (6) is completed, the product (water) will be added and the emptying valve (7) will open for the transfer of the product to the storage container (10). The dioxide pump (3) will start dosing the final product using the working-mode set on the controller.

12) At the end of the procedure check that there are no leaks, then turn off the instrument and repeat the reaction and storage (6 and 10) cleaning procedure. Put the lances in the tanks with their respective products: acid and chlorite and the system will automatically start.

Main components

The "LOTUS AIR" unit consists of the following main components. The IN/OUT connections for the pumps and the multivalve are designed for 4 × 6 mm tubing.

"LOTUS AIR 10"

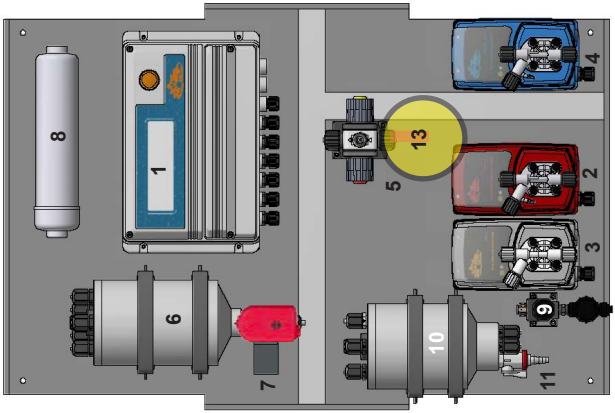

"LOTUS AIR 10 Reading"

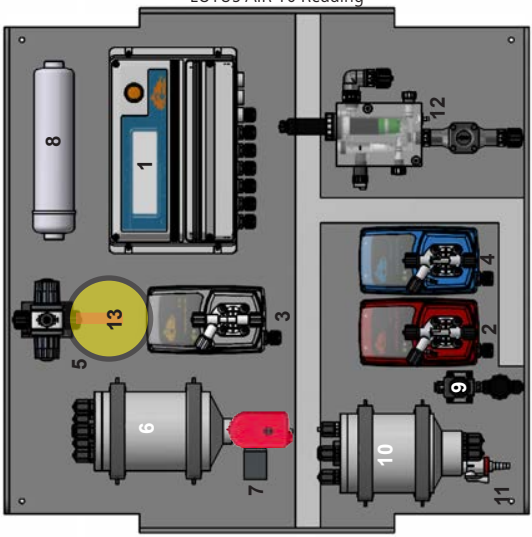

1 - "LOTUS" control and management instrument
2- HCl dosing pump
3- Chlorine dioxide dosing pump
4- $NaClO_2$ dosing pump
5- Pressure balancing multi-function valve
12 -PEF probes holder
13 - Delivery hose

6- Reaction tank
7- Reaction tank emptying motorized valve
8- Active carbon filter
9- Reaction tank water filling solenoid valve
10- Storage tank
11- Drain tap

Note: components position could be different

Main components

The "LOTUS AIR" unit consists of the following main components.

"LOTUS AIR 60 Reading"

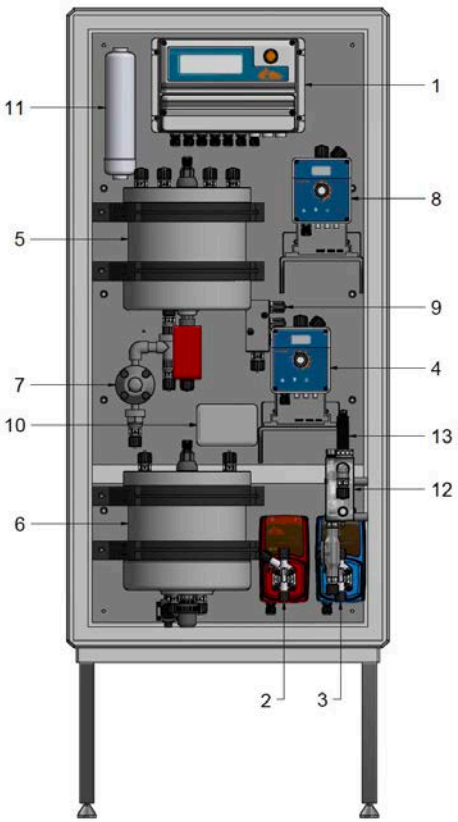

"LOTUS AIR 30 Reading"

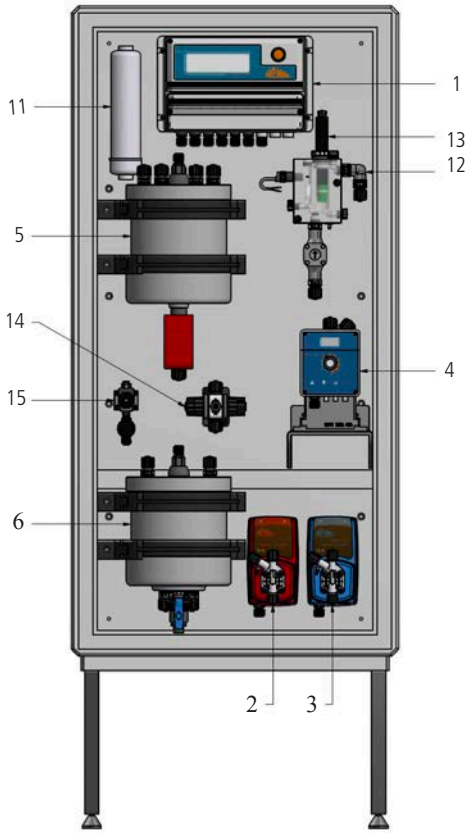

Note: components position could be different

1 LOTUS AIR Controller
2 Dosing pump VCO 0512 - HCl
3 Dosing Pump VCO 0512 - NaClO2
4 Dosing pump AMSIS 0720
5 Reaction tank
6 Storage tank
7 Security system
8 Dosing pump AMSIS 0720
9 Pump breather manifold
10 Junction box
11 Activated carbon filter
12 PEF1ER-K (optional)
13 SVCL Probe (optional)
14 MFKT Multifunction Valve
15 Solenoid Valve

Hydraulic connections

The hydraulic components to be installed for the pumps to work properly are:

Suction Hose with a level probe and bottom filter x
Delivery Hose with injection valve
Discharge hose x 3

Suction Hose.

Unscrew the suction ring nut completely on the pump body and draw the components required to assemble the hose: tightening ring nut, Holding ring and hose holder.

Assemble as shown, making sure that the hose is fully inserted on the hose holder.

Tighten the hose on the pump body by tightening the ring nut with your hands.

Connect the other end of the hose to the bottom filter using the same procedure.

Figure A

Delivery Hose.

Unscrew the suction ring nut completely on the pump body and draw the components required to assemble the hose: tightening ring nut, Holding ring and hose holder.

Assemble as shown, making sure that the hose is fully inserted on the hose holder.
Tighten the hose on the pump body by tightening the ring nut with your hands.
Connect the other end of the hose to the injection valve using the same procedure.

Discharge hose.

Insert one end of the Discharge hose on the drain hose connection as shown in figure A (page 12).
Place the other end directly into the tank containing the product that is to be dosed. In this way, the liquid that leaked during the priming phase will return into the tank.

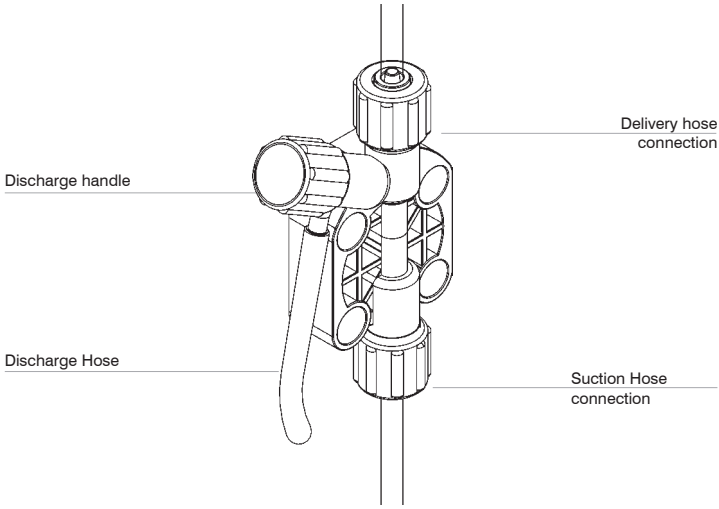

Self-venting pump body (chlorine dioxide dosing pump)

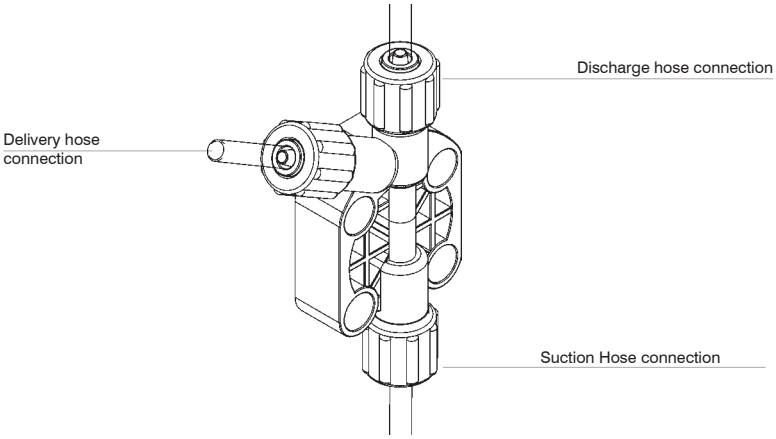

Note:

- the suction, delivery and Discharge valves are DIFFERENT.
- the delivery and Discharge hoses are of the same type.
- the Discharge hose can be slightly bent to be inserted into the tank of the product that is to be dosed.

Injection Valve.

Injection valve must be installed on plant from water's input. Injection valve will open at pressure greater than 0,3 bar.

Venting hose.

Insert one side of venting hose into venting connector as shown in fig (C).

Insert other side of venting hose into product's tank.
During priming procedure product exceeding will flow into tank.

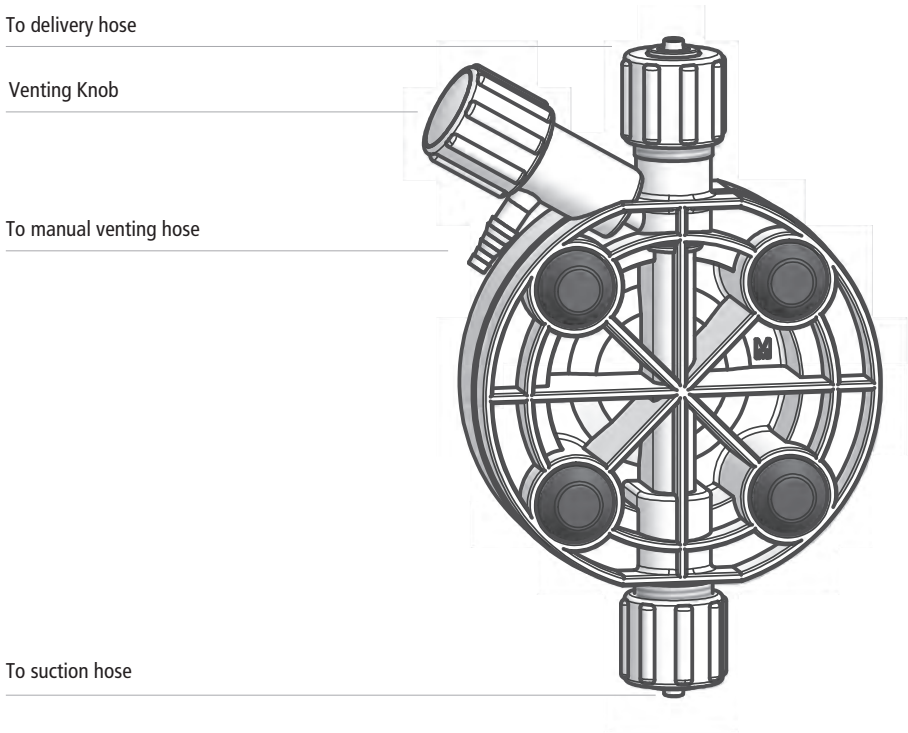

fig. (C)

Self-venting pump head must be used when using chemicals that produce gas (i.e. hydrogen peroxide, ammonium, sodium hypoclorite at particular conditions).

Fig. 4. Self-venting models pump head: LA, MA, NA (AMSA).

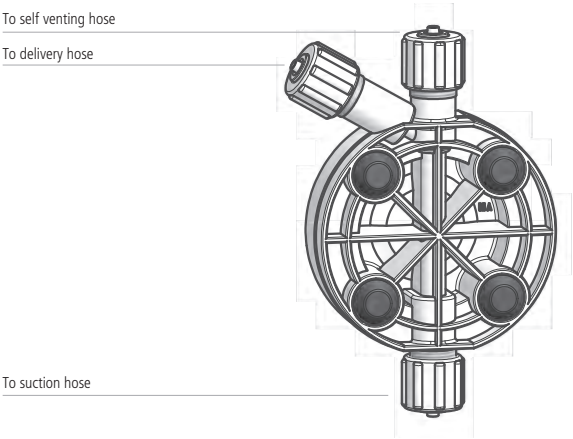

Fig. 5. Self-venting models pump head: SA, TA (AMSA).

ON "SA" AND "TA" MODELS THERE IS A RED THREADING NUT

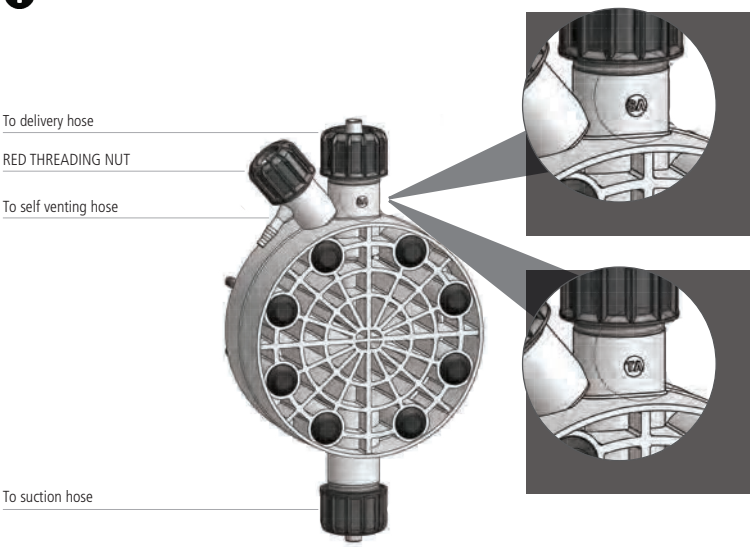

Assembling the bottom filter with a level p obe.

The level probe must be assembled using the relative kit with the supplied foot valve.
The foot valve is made to be installed at the bottom of the product container without sediment priming issues.

Connect the BNC on the level probe on the level input on the right side of the instrument. Insert the level probe with the assembled bottom filter at the bottom of the tank of the product to be dosed.

Additional connections (with reference to page 11)

Danger

Connect the dioxide pump delivery (3) to the multi-function valve suction (5)
Connect the multi-function valve delivery to the system to dose the chlorine dioxide by injection
Connect the filling solenoid valve input (9) to a water source*
Connect the filter Discharge output (8) and the bleed of the reserve tank (10) to a drain
Connect the dosing pump suction (2 and 4) to the chemicals

If you use customized tanks it is advisable to drill a 38mm hole on the cap of them and fix the level probes on it tightening the ring placed at the beginning of the rods.

*max 2bar with pressure stabiliser

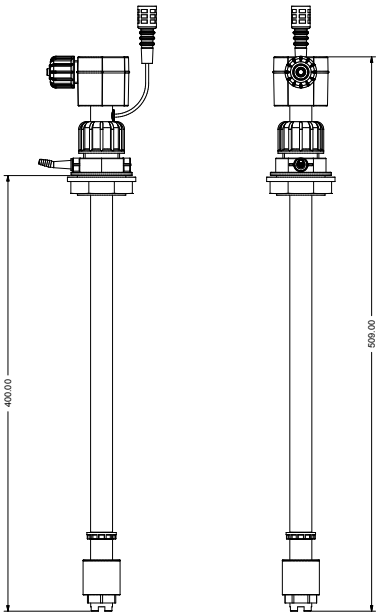

Operating logic

The "LOTUS AIR" chlorine dioxide generator consists of the following main components: a production management tool, 4-filling level reaction tank, 2-filling level storage tank, HCl dosing pump, $NaClO_2$ dosing pump, chlorine dioxide dosing pump, reaction tank emptying solenoid valve and reaction tank with water filling solenoid valve. Note: during first startup use water instead of chemicals (e.g.: priming, seal check, calibration)

Dioxide production cycle, the 7 main phases

Phase 1: Activation of the water filling solenoid valve up to the first level in the reaction tank. Disabling the solenoid valve.

Phase 2: Activating the pump to dose the HCl up to the second level in the reaction tank. Disabling the pump.

Phase 3: Activating the pump to dose $NaClO_2$ up to the third level in the reaction tank. Disabling the pump and the instrument outputs.

Phase 4: 15-minute count for the chemical reaction and consequent production of chlorine dioxide.

Phase 5: Activation of the water filling solenoid valve up to the fourth level in the reaction tank. (dilution)

All the levels must be reached in less than 60 seconds, otherwise an alarm is triggered. Any alarm during this phase stops the procedure and empties the reaction tank.

Phase 6: Activating the emptying solenoid valve of the reaction tank and filling the reserve tank.

Phase 7: Disabling the emptying solenoid valve until the product decreases to the last level in the reaction tank.

Once this operation is complete, the dioxide production cycle begins again and, depending on the setting of the set-points, the dioxide dosing pump is activated to empty the storage tank.

Connections to the motherboard

Before performing any operation on the terminal board of the instrument, it is mandatory to disconnect it from the mains. To facilitate the connections to the motherboard, it has been divided into two blocks: electrical connections and I/O connections.

Unplug power cable from main power supply before operate on controller's board

The terminal numbering is relative to the connection on which you are working on (Electrical or I/O)

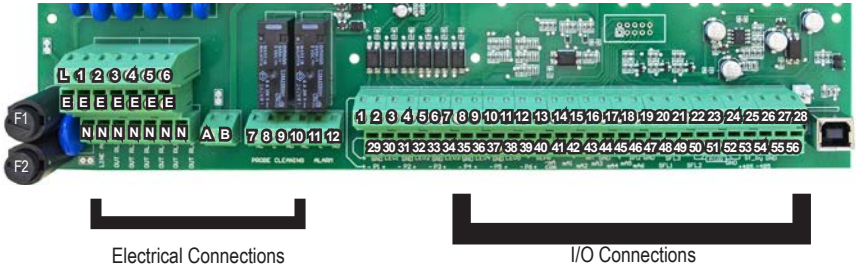

Electrical connections:

F1: Main fuse (6.3AT)
F2: Instrument fuse (3.15AT)

MAIN POWER SUPPLY (115VAC / 240VAC): L(Phase), E(Earth), N(Neutral)

MOTORIZED VALVE OPENING CONTROL: 6(OPEN/GREEN) - A(PHASE/BROWN) - B(NEUTRAL/BLUE)

SET-POINT OUTPUTS (115VAC TO 240VAC):
(free contact outputs are not protected with a fuse and isolation between the outputs and the power supply is 250V MAX):

1 - E - N (F2 Fuse-protected) OUT HCl
2 - E - N (F2 Fuse-protected) OUT $NaClO_2$
3 - E - N (F2 Fuse-protected) OUT H_2O

DIOXIDE LEVEL INTO STORAGE TANK:
7(N.C. for no dioxide), 8(C), 9(N.O. for dioxide) Free contact

GENERAL ALARM OUTPUT:
10(N.C.), 11(C), 12(N.O.) Free contact

Warning: Do not connect the power supply of the dosing pumps in PWM mode.
Warning: Maximum relay output power consumption in PWM mode: 5 W.

Attention: the connections must be implemented by qualified pe sonnel

I/O Connections:

OUTPUTS FOR A DIGITAL SIGNAL PROPORTIONAL PUMP:

1(-) ; 2(+): ClO2 pump signal output
3(-) ; 4(+): Pump VIS HCl
5(-) ; 6(+): Pump VIS $NaClO_2$
7(-) ; 8(+): Pump retainer 4 ext
9(-) ; 10(+): Pump retainer 5 ext
11(-) ; 12(+): Pump retainer 6 ext

OPTO ISOLATED SIGNALS open manifold

(-)not a shared signal!

mA CURRENT OUTPUTS (MAX RESIST. LOAD: 500 OHM):

mA Outputs Active – Do not connect any external voltage - Driver voltage without load: 15V

13: GND (common)
15: mA output for PROD (production)
16: mA output for READING (probe's dioxide reading)

RS485:

26: + Signal 485 (A)
27: - Signal 485 (B)

GND is a shared ground!

REACTION TANK LEVEL INPUTS:

29 (-) ; 30 (+ White) Water Level 1
31 (-) ; 32 (+ Grey) HCl Level
33 (-) ; 34 (+ Brown) $NaClO_2$ Level
35 (-) ; 36 (+ Green) Water Level 2

(-) is a shared (GND) ground ! YELLOW

STORAGE TANK LEVEL INPUTS:

37 (- Black) ; 38 (+ Light Blue) "Low" Level
55 (- Black) ; 54 (+ Brown) "High" Level

PROXIMITY SENSOR INPUT (MOD. "SEPR"):

39 (+ Brown) ; 40 (Black) ; 41 (- Blue)
connect terminal 41 with terminal 37

FLOW CONTACT INPUT:

39 ; 40
connect terminal 41 with terminal 37

PULSE EMITTING WATER METER (HALL EFFECT):

42(+12VDC) ; 43(INPUT) ; 44(GND)

PULSE EMITTING WATER METER (CONTACT):

43(INPUT) ; 44(GND)

TEMPERATURE PROBE INPUT (PT100)

50(green) ; 51(brown) ; 52(white) ; 53(yellow)
(remove the jumper before installing the probe)

STANDBY:

48(+) ; 49(-)

HCL LEVEL:

46(+) ; 47(-)

$NACLO_2$ LEVEL:

20(+) ; 21(-)

Probe modules connection

At the top of the motherboard there are 4 adaptors for the installation of the probe modules and inputs.
Upon request, these modules are installed by the manufacturer. For proper installation, check the installed modules and implement the required connections. A standard Ethernet cable (RJ45) is required for the ETHERNET version (module with red circle).

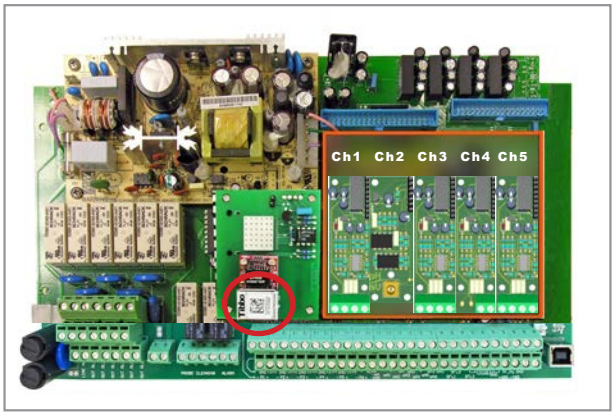

Danger

Unplug power cable from main power supply before operate

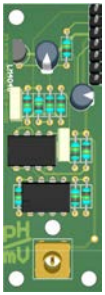

MDPH Ch2

MDRH Ch2

pH or ORP probe input module*

Adaptor: supplied BNC
*as specified when order

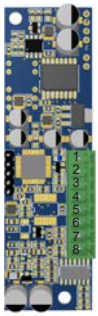

MDSVCL Ch3

SVCL probe connection:

1)-12 VDC SVCL probe
2)+12 VDC SVCL probe
3)ext. PT100 yellow wire
4)ext. PT100 white wire
5)ext. PT100 brown wire
6)ext. PT100 green wire
7)+ SVCL probe mV
8)- SVCL probe mV

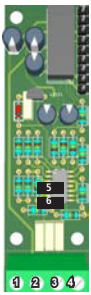

MDCL Ch3

CI probe connection:
ECL2/2
ECL2/20
ECL17/10
ECL18/10
Jumpers: 5 and 6 open
Block 1 : (+) Brown
Block 2 : (-) White
Block 3 : (IN) Green
Block 4 : (GND) Yellow

ECL4
ECL5
ECL6
ECL7
Jumpers 5 and 6 closed
Block 3 : (-) Black
Block 4 : (+) Red

MDSCL Ch3

CI probe conn.:
SCLxx

1 (-485) GREEN wire
2 (+485) WHITE wire
3 (GND) BLACK wire
4 (+5VDC) RED wire

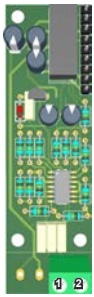

MDMA Ch4

Flow sensor module (mA)

Block 1 : red wire (+)
Block 2 : black wire (-)

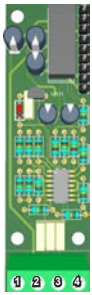

DIOXIDE SENSOR Ch5

Connection:

Bl. 1 : (+12) Brown
Bl. 2 : (-12) White
Bl. 3 : (V out) Green
Bl. 4 : (GND) Yellow

Browsing the menus

At the top right of the "LOTUS AIR", there is the knob to browse and programme the instrument. The knob can be rotated in both directions to move the cursor through the menus and the selection. The function is confirmed by pressing the relative function.

NOTE: When the changes have been made press the wheel on "OK" to save and exit the sub-menu. Select "ESC" key and press the knob to exit without saving. Access to configuration menu is enbled during reaction time or during storage tank filling only.

Probes (page 25)
Water Meter (page 28)
Mode Selection (page 29)

System Settings (page 23)
Service (page 33)
Clean (page 33)

Alarms (page 31)
Pump Calibration (page 32)
Priming page (page 33)

Communication (page 34)
Log Setup (page 36)
Test Reaction Time (page 41)

mA Outputs (page 41)
Reactor calibration (page 41)

Main screen

Additional notes

*The configuration and screens may differ (i.e.: ORP probe or pH Probe when ordering).; you can download the latest version of this manual from the manufacturer's website or by contacting Technical Support. A locker icon means that access to main menu isn't available during a discharging or filling tank cycle.

"LOTUS AIR" system setting

For the "LOTUS AIR" system to work properly all the settings listed below must be configured properly. It is recommended to primarily set the DATE & TIME.

"System Settings", "Mode Selection"
"Probes", "Water Meter", "mA Input"
"Clean", "Service"

SETTINGS

Enter this menu by selecting "MENU'" from the main screen, enter the PASSCODE (default is: 0000) and select "Settings". Save the settings by selecting "ESC", then confirm the changes by moving to "YES" and pressing the knob.

pH Comp* & Cl Comp

To enable the pH (based on temperature) or chlorine dioxide (based on the pH value) compensation factor, move the cursor next to the item that is to be changed, press and turn the knob. The compensation can be enabled (YES) or disabled (NO). pH compensation isn't available in ORP version. *not available for ORP model

PASSCODE to access the menus of the instrument

To set a new PASSCODE to access the instrument menu, choose "PASSCODE" and enter the 4-digit number. Move the cursor to "EXIT" and select "YES" to save. The new PASSCODE is now operational.

Language / Time / Date

To set the display language of the instrument move the cursor to "ENGLISH/EU" (default language and metric system) and press the knob to select. Note: when using the "ENGLISH/US" option, the units of measurement will be changed with respect to the United States. To adjust the time and/or date, move the cursor to the desired item and press the knob to adjust the individual fields.

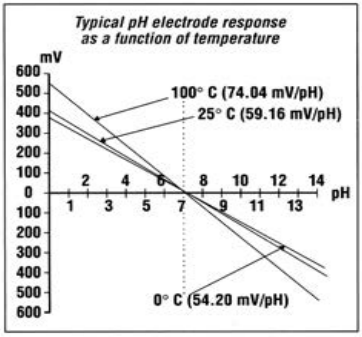

The pH measurement in a system highly depends on temperature. The degree to which the latter, influences conductivity depends on the solution used.

In the "LOTUS AIR" system it is calculated using the table at the side. The "LOTUS AIR" system can be configured to use a fixed (25°C) or variable temperature and compensate automatically.

View pH or ORP* / Cl / Temp

The instrument can only display a few items on the main screen, including the 3 main parameters: pH, chlorine dioxide and temperature. Set YES or NO to enable or disable the display of these items.

Feeding

The distribution of the dioxide from the storage tank it's launched by using an internal relay. Field not editable.

Reset

To restore the instrument to the factory settings, select this item and confirm with "YES". The instrument will restart with the initial configuration values. Note: this operation also deletes and restores the two PASSCODEs. Once restarted you must configure the instrument.

Standby

This function allows the stop all instrument activities (LOCK ALL) or the dosing activity only (DOSING ONLY) when there is a change in the contact. Configurable options are: contact type NO - N.C. or disabled. Choose LOCK ALL for the complete stop of instrument or DOSING ONLY to stop dosing activity only. The contact is located on module MDCL-CH1 (pin 1 and GND).

CC/S

This option set CC/S value for storage pump and can be configured from 0,01 to 9,99 CC/S. Change this value only if system is working at different values than 5bar.

RESERVE

This option set production cycles countdown starting from last low level warning (for Hcl and $NaClO_2$ pumps). Accetted values are within 0 (disabled) and 200.

PROD.

This option allows you to limit dioxide production until the storage tank is not completely empty. Select "LEVEL CONTROL." To enable this option. To disable select "CONT."

SYS.STP

This option allows you to set a time limit (from 0 disabled to 240 hours) which enables the sending of an alert message via email if the set dioxide production cycles are not carried out within the set time.

*as specified during order

PROBES

Enter this menu by selecting "MENU'" from the main screen, enter the PASSCODE and select "PROBES". Save the settings by selecting "ESC", then confirm the changes by moving to "YES" and pressing the knob.

Chlorine Dioxide & Select Probe

Before calibrating the chlorine dioxide probe (Ch3) verify that the selected model is the correct one. Select "SELECT PROBE" in the "PROBES" menu. If necessary, select the item and turn the knob until you see the correct model of the probe. Confirm by pressing the knob and moving the cursor to "ESC", then confirm the changes by moving to "YES" and pressing the knob.

Probe	Scale (mg/l)
ECL 2/2	2,000mg/l ClO_2
ECL 2/20	20,00mg/l ClO_2
ECL4,5,6,7	10,00mg/l ClO_2
ECL 17/10	10,00mg/l ClO_2
None (rH only)*	999mV

*setpoints are related to Redox channel and chlorine dioxide view is disabled

Select "CHLORINE DIOXIDE" in the "PROBES" menu to calibrate 2 points of the previously selected probe.

Attention

Attention: this procedure assumes that the instrument is configured properly and connected to a working probe, otherwise the results may not be reliable.

Calibrating the first point (P1)

- move the cursor to "P1" and press the knob.
- install an "active carbon filter" in the probe-holde .
- let water flow into the probe-holder for 30 minutes
- press the knob with the cursor on "OK". Remove the filte .

Calibrating the first point (P2)

- move the cursor to "P2" and select it.
- use a photometer or DPD system to read the chlorine dioxide in the plant. Enter the value read in "Cal. at".
- press the knob with the cursor on "OK".

If an error message is displayed repeat the calibration procedure!

pH Probe

Before you calibrate the pH probe (Ch2) verify that you have two buffer solutions with values close to those found in the plant (e.g. 7pH and 4pH). Select "pH PROBE" in the "PROBES" menu to calibrate 2 points of the probe.

Attention

Attention: this procedure assumes that the instrument is configured properly and connected to a working probe, otherwise the results may not be reliable.

Calibrating the first point (P1)

Select "P1" in the "pH Calibration" menu and press the knob to enter the first point that is to be calibrated. Prepare the buffer solution 7,00 pH and immerse the probe sensor. Wait for the value to stabilise. Enter the value of the buffer solution in the "Cal. at" field Press to confirm End by moving the cursor to "OK" and press to move on to the next step.

Attention

Warning: The value of the buffer solution may change if the ambient temperature is different from 20°C. Read the label of the buffer solution for more information. In this case the "pH Default" value should be changed.

Calibrating the second point (P2)

Select "P2" in the "pH Calibration" menu and press the knob to enter the second point that is to be calibrated. Prepare the buffer solution 4,00pH and immerse the probe sensor. Wait for the value to stabilise. Enter the value of the buffer solution in the "Cal. at" field Press to confirm

To end the procedure, select "OK" and press the knob. The tool will prompt the saving ("Save") of the settings. Press "YES" or "NO" to either save or not.

Attention

Warning: The value of the buffer solution may change if the ambient temperature is different from 20°C. Read the label of the buffer solution for more information. In this case the "pH Default" value should be changed.

ORP Probe

ORP calibration procedure involves probe's selection with one point (P1) calibration. From "Menu Calibration" choose "ORP probe".

Attention

Note: This procedure assumes that instrument is correctly configured and a working ORP probe connected and installed on system. Measurement must be performed using plant water. Otherwise unattended results may occurr.

Calibration can be performed in two ways: the first by alignment with a bu fer solution, the second by reading the residual ORP level of the pool with the DPD1, comparison with the attached graph followed by alignment of the pumps group. The choice of method is exclusively at the user's discretion.
In both cases, to establish the set-point value, a check using the DPD1 or other analysis system is necessary. The enclosed graphs provide a reference between the mV value read by the pumps group and the quantity of residual ORP expressed in mg/litre, and are l
1) Measure buffer solution temperature and verify that it is the same printed on solution's label.
2) Remove protective cap from probe and wash probe's tip into water. Then dry it by shaking up to the air.
3) Set "Cal. at" value to match buffer solution value then put probe's tip into buffer solution and wait until instrument shows a stable reading value (mV field)
4)Move cursor on "OK" and press wheel ton cofirm the new calibration value. If calibration process fails the instrument will show "CALIBRATION FAILED". Repeat procedure otherwise move on "ESC" and press wheel.

Temperature Probe

To calibrate the temperature probe select “Calibration Temp” from the “Probe” menu. In order to complete this task, it is necessary to use a professional thermometer to take the temperature of the plant.

Warning: this procedure can be completed only if the instrument is correctly installed and the temperature probe is in good condition. Otherwise you could get unreliable results.

Take the temperature of the plant using a thermometer and enter it in the “Calib at.” field. Then press the knob and move the cursor on “OK”. Confirm by pressing the knob again. End by moving the cursor to “EXIT” and pressing the knob. Then turn the knob to select “YES” if you want to save the changes or “NO” to exit, restoring the previous values. Then press the knob again to enforce your choice.

Temperature Alarm

Use this function to set a temperature value above which the instrument stops all activities, activates the main alarm output and generates a warning message. To set the temperature value proceed as follows:

- press on the knob

- set the value by turning the knob

- press the knob and move the cursor on "ESC". Then press the knob again to confirm ("YES") and save the setting.

ECL probe selection

pH probe calibration menu

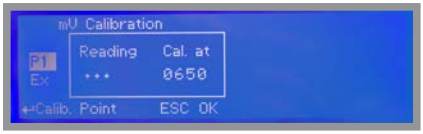

ORP probe calibration menu

Temperature calibration menu

WATER METER

This menu allows you to set the operation mode of a pulse emitting water meter connected to the "LOTUS AIR" system. Enter this menu by selecting "MENU'" from the main screen, enter the PASSCODE and select "WATER METER". Save the settings by selecting "ESC", then confirm the changes by moving to "YES" and pressing the knob.

Mode

This function allows you to set the display mode and to calculate the reading scale of the pulse emitting water meter connected to the "LOTUS AIR" system. The possible configurations are:

IMP/LTR (calculation based on number of pulses set in VALUE for each litre)
LTR/IMP (calculation based on number of litres set in VALUE for each pulse)
mA (calculation based on RESOLUTION and MAXFLOW)

Value

Setting the operation mode on "IMP/LTR" or "LTR/IMP" defines the number of pulses or litres necessary to complete a single unit for each pulse or litre.

Max.Flow (cbm/h) & Resolution

Set these values if you use the mA calculation method. Max Flow defines the maximum value of the flow in cbm/h (cubic meters per hour) to achieve compared with the highest resolution mode of 20mA.
Resolution determines the operation of the pulses based on the incoming signals received in 0/20mA or else 4/20mA. It is recommended to perform the calibration of this incoming signal, after having chosen the configuration type (see page 28)

TIMEOUT

If no more pulses are received from water meter during seconds set (e.g.: 20s, max 99s) then "LOTUS AIR" system will end the dosage .

WORKING MODE

This menu allows you to set the operation mode of the system. Enter this menu by selecting "MENU'" from the main screen, enter the PASSCODE and select "WORKING MODE". Save the settings by selecting "ESC", then confirm the changes by moving to "YES" and pressing the knob.

PROPORTIONAL (WM)

This function allows you to set the operation mode proportional to the PUMP output based on the flow detected by the pulse emitting water meter. The PUMP CL output (based on 180 strokes per minute) is referred to as "P1" on the main board of the instrument.

In the absence of flow the instrument will stop and a countdown (settable from 0 to 180 minutes, TIME) will begin at the end of which the dosage will re-start with set Stk / h. On the main display an asterisk will highlight this mode which will be active until the end of the product or when the flow is estored. To disable this function, set TIME to 0.

Example: Set PUMP CL [%] at 100 with flow at 10 m³/h
The chlorine dioxide pump will dose to its full capacity (180 strokes per minute) for flux values greater than or equal to 10m³/h.
The chlorine dioxide pump will dose at 50% of its capacity (90 strokes per minute) for values of flow reading of 5m³/h.
The activity of the chlorine dioxide pump will be proportional to flux values lower than that set.

PROP.(WM) + READING (CL)

This function allows you to set the operation mode proportional to the PUMP output based on the flow detected by the pulse emitting water meter and the value read by the chlorine dioxide probe.
The PUMP CL output (based on 180 strokes per minute) is referred to as "P1" on the main board of the instrument.

Example: Set PUMP CL [%] to 100 @ 10m3/h; 1mg/l a 0p/m ; 0.80 a 180p/m
When the values of the flow will be greater than or equal to 10mc/h, the pump will be active in proportion to the reading values of the chlorine dioxide probe. For example at 0.9mg/l and at 10mc/h, the pump will dose at 90 strokes per minute (out of 180). For flux values less than or equal to 10mc/h, the pump will also be dependent on the input flow. For example, at 0.9mg/l and at 5mc/h, the pump will be active with 45 strokes per minute (out of 180).

50% of 180 strokes per minute are determined by the value of chlorine dioxide read and 50% from the input flow, then the percentage of strokes produced by the pump will be determined by (50 * 50) /100 = 25%. 25% of 180 strokes is 45 cpm

PROPORTIONAL (mA)

This function allows you to set the operation mode proportional to the PUMP output based on current received from mA input.
The PUMP CL output (based on 180 strokes per minute) is referred to as "P1" on the main board of the instrument.
T
Example: set PUMP CL to 180p/m @ 20mA and 0p/m @ 0mA

The chlorine dioxide pump will dose to its full capacity (180 strokes per minute) for ma reading values greater than or equal to 20mA. The chlorine dioxide pump will dose at 50% of its capacity (90 strokes per minute) for ma reading values of 10mA. The activity of the chlorine dioxide pump will be proportional to mA values lower than that set.

Note: one of mA value must be set to 0 otherwise the insturment will change it automatically.

CONSTANT

This mode allows you to set the constant operation mode for the PUMP [pulses per minute].

The **PUMP CL** output (based on 180 pulses per minute) is called "P1" on the main board of the instrument.
Timer: Yes or No (enables timed activity)
Start / Stop: specifies in which time intervals (hours, minutes) this mode operates.

Eg: set PUMP CL [P / m] to 180

The chlorine dioxide pump, when activated, will dose to its maximum capacity (180 minute strokes)
If the timer is set, the Lotus will dose within the set time window, within it the dioxide will be dosed with constant pulses as set in the Pump ClO2 [P / m]. If the timer is not set, Lotus will always dose with constant pulses as set in the Pump ClO2 [P / m].

READING (Cl)

This mode allows you to set the operation mode proportional to the values read from the chlorine probe.
The PUMP CL output (based on 180 strokes per minute) is referred to as ''P1'' on the main board of the instrument.

Example: Set PUMP CL [%] to 1,00mg / l to 180 strokes per minute and 0,80mg / l for 0 strokes per minute
The chlorine pump will dose to its full capacity (180 strokes per minute) for reading values greater than or equal to 1,00mg/l.
The chlorine pump will dose at 50% of its capacity (90 strokes per minute) for reading values of the chlorine of 0,9mg/l.
The activity of the chlorine pump will be proportional to the values of chlorine between the two set points set.

EXTERNAL IS

This mode allows to duplicate a signal coming from an "IS" output of another controller and send it to 1(-) ; 2(+): Pump Output ClO_2 of mainboard.

Used input is: 37 ; 38 of mainboard.

Alarms

Probe flow alarm (contact) can be enabled to stop a dosing procedure using a N.O. contact mode (normally open) or N.C. contact mode (normally closed) when status on blocks changes. Rotate wheel to choose between: "DISABLE", "REVERSE" (N.O. contact) or "DIRECT" (N.C. contact).

Furthermore "Flow contact" can starts after a specified time when contact status changes. To set it move wheel on "Time:00 min", click it and rotate to choose time (from 0 to 99 minutes). Confirm selection by clicking wheel.

Min / Max Range can be set to stop or continuing to dose if reading probe value aren't within selected range after a settable amount of time. Parameters to set are:

Mode: stop, dose, disabled.

Time: after this amount of time the selected mode is enabled

Max / Min: mV reading value from probe (refer to select probe for correct value) within the selected mode isn't operative.

To end procedure move cursor on "OK" and press wheel to proceed to "Save" request screen. Move wheel on "YES" to save or "NO" to discard changes.

Pump Calibration

This function allows the calibration of the "chlorine dioxide" dosing pump based on strokes capability. To calibrate, proceed as follows:

1. Set strokes of the metering pump according to its capability (eg 100)
2. Place an additional suction hose in a graduated beaker
3. Move curson on Mode, press wheel, select Start, then press the knob.
4. Wait until the end of the 100 strokes
5. Measure the product in the Becker
6. Enter measured quantity in ml (ml field). The instrument calculates the cc/s that the pump is able to produce.
7. Move cursor on OK and press the wheel to save settings.

In the event of an emergency, procedure can be interrupted moving cursor on Mode and selecting STOP.

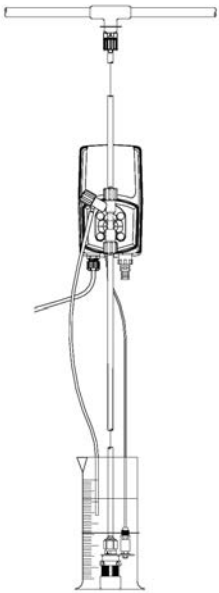

Service & Clean

Enter this menu by selecting "MENU'" from the main screen, enter the PASSCODE and select "SERVICE" or "CLEAN". Save the settings by selecting "ESC", then confirm the changes by moving to "YES" and pressing the knob.

Service

From this menu it is possible to view the functions of the inputs relative to:

pH or ORP Probe (as specified when ordering)

Cl2 Probe

Temperature Probe

Instrument's MAC address and 6 DIGITS Code for ERMES Communication Service

Clean

From this menu you can start the cleaning process of the reaction tank by filling it and emptying it with water.

1. Select this menu to start the procedure
2. The solenoid valve (9) to load water to the reaction tank "EV H_2O_2: ON" is active
3. The systems displays the message "PLEASE OPEN DRAIN". Open drain tap (11).
4. When the reaction tank is full, the water loading solenoid valve (9) stops "EV H_2O_2 : OFF"
5. The solenoid valve (7) of the reaction tank and the instrument displays "EV BLEED: ON"
4. Open the drain tap (11) on the storage tank (10) to drain the water
5. The procedure ends and the instrument displays "EV BLEED: OFF"

Priming

Enter into this menu to manually enable or disable pumps and outputs. This function can be used for initial pumps priming. At the end of the procedure it is recommended to empty both the tanks: storage and reaction.

Note: if the storage tank isn't completely empty, the EV for chlorine dioxide discharging will not turn on.

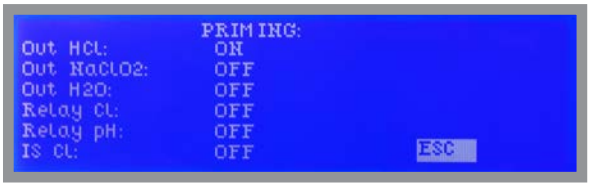

Rotate knob, highlight output (Relay) or pump (Out) and press knob to change its own status.

COMMUNICATION (TCP/IP & GPRS)

This instrument can be controlled and programed remotely using the system called ERMES and a standard web browser (i.e.: Google Chrome or Safari). In order to use this service an internet connection is required (lan or wan) and user must configure the instrument to obtain a valid IP address (through a valid DHCP service or manually). If this instrument is installed within an office network please contact your system-administrator to obtain required parameters and eventually unlock TCP/IP port 2020.

Things to do before setup.

Network administrstor required

1. Ensure that on instrument MAC ADDRESS (see SERVICE menu) the TCP/IP port 2020 is unlocked. Check it with your system-administrator.

2. Connect to your ERMES account or create a new one at: **www.ermes-server.com**

3. Within ERMES account add the new instrument using the 6 digits code located into SERVICE menu. (choose LAN DEVICE or MODEM code based on connection type choosen prior to buy the instrument)

Parameters to be configu ed in the communication menu (TCP/IP)

In order to communicate **via LAN cable to ERMES** server the following parameters must be set:

Basic Network skills required

If configuration requires the presence of a ROUTER with automatic IP address assignment from TCP/IP menu select IP MODE and set it to DYNAMIC.

If local LAN needs to provide static IP address then from TCP/IP menu select STATIC IP MODE and enter the following parameters:

IP address: enter the unit unique available IP address using syntax xxx.xxx.xxx.xxx

SUBNET (netmask): range of belonging to the host within a subnet IP. For example: 255.255.255.0

GATEWAY: The IP address of the device that routes packets. For example: 192.168.1.1

DNS: IP address of the device that resolves the names of network nodes.
It is usually the same as the GATEWAY. It can bel also a public DNS address (e.g.: 8.8.8.8)

Parameters to be configu ed in the communication menu (GPRS)

In order to communicate **via GPRS modem to ERMES** server insert SIM into modem's slot the slot.
A data plan subscription is suggestes to reduce SIM costs. From GPRS menu set the following parameters:

Ermes SERVER: select YES to activate the traffic data with Ermes server or select NO to use the GPRS modem only for SMA and/or EMAIL alerts messages.

APN: ask SIM mobile company what is the name of the access point designated

APN Username & Password: ask SIM mobile company both these parameters

PIN: Enter the assigned 4 digits code to automatically unlock the SIM

COMMUNICATION (MESSAGES Setup - RS485)

This instrument can send emails and / or sms when a system failure or warning happens. If instrument is configured to operate through the LAN only email messages can be send. Otherwise if instruments has a mobile modem both SMS and emails messages can be send.

MESSAGES Setup

Within this menu is possible to setup up to three SMS (SMS1, SMS2, SMS3) recipients and two email (email 1, email 2) addresses. Editing MSG ALARM and MSG WARNING ALARM is possible to setup which type of error must be notified (see below table).

MSG warning	MSG alarm
MAXIMUM TIME REACHED	PROBE FLOW ALARM
HCl LEVEL	CHLORINE DIOXIDE IN STORAGE NO LONGER USABLE
NaClO2 LEVEL	SYSTEM NOT READY
ST.Tank Full	
SYSTEM NOT READY	

RS485 Setup

This instrument can be connected in a network of instruments via RS485 (max 32) to take advantage of a single modem or LAN connection for remote programming (through ERMES server) or local (ask your provider).

Make the cable connections as described in RS485 terminal blocks (page 17) and then in the RS485 menu, set the RS485 unique ID NAME for each instrument.

CHECK if entered in ID NAME has been properly accepted by clicking on ID CHECK, if an error message is reported by the instrument modify it.

COMMUNICATION (LOG & LOGBOOK)

This function, when enabled, allows to record and send to ERMES server all instrument activities (date, time, temperature, levels, alarms, totalizers, outputs status) for a set period (EVERY) and starting from a certain time (TIME) .

Note: SET TIME AND DATE PRIOR TO ENABLE THE LOG. If not fed after 30 days the instrument will lose current date and time.

TIME: log starting time (format 23h 59min)

EVERY: frequency of recording (format 23h 59min)

E.g.: To set the instrument to begin logging events starting from 16:00 every hour set TOME to 16h: 00 and EVERY of 1h: 00m

Note: To view on instrument's display the archived logs select LOGBOOK

REACTION TIME TEST

This feature allows to perform a test of the permanence of liquid inside the reaction tank (1 to 20 minutes) for the specified duration and for a single production cycle. Can be used to verify the correct functioning of the system.

WIFI Connection

Within Communication Menu choose "WIFI" to bring wireless sub-menu.To manually enter the WiFi Network highlight and click on first line to the right side of the menu and choose cryptography type (WPA, WEP or OPEN). Otherwise move cursor below to choose within an existing network. If network doesn't apper move cursor on SCAN and click on it. Wait until desired wireless network appears, then move wheel on it then click. Enter WEP / WPA / WPA2 password (if required) and wait until connection has been estabilished and WiFi signal strength appears. To obtain a reliable connection be sure to install the controller within WiFi range. See your router features and installation procedure for best results.

WiFi signal strength

Note: if an existing network doesn't appear at first scan please repeat scanning procedure after a whil .

MODBUS

Modbus is a serial communications protocol originally published by Modicon (now Schneider Electric) in 1979 for use with its programmable logic controllers (PLCs). Simple and robust, it has since become a de facto standard communication protocol, and it is now a commonly available means of connecting industrial electronic devices.

From main menu select COMMUNICATION then MODBUS to access the options. Set the communication speed according to the PLC system available. Set the ID assigning an UNIQUE address to avoid conflict .

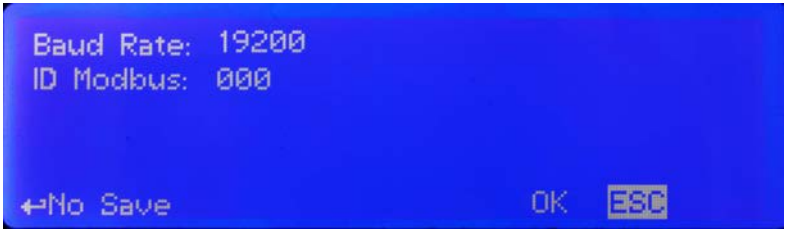

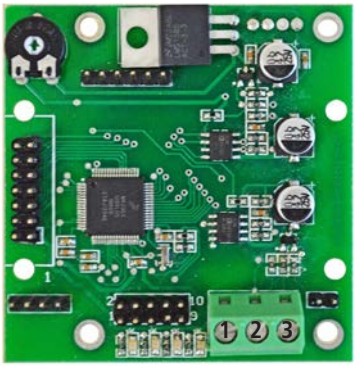

To access the module MODBUS open the instrument only after power is switched off!

Never make connections with the instrument powered!

WARNING

1: GND
2: A-RS485 (+)
3: B-RS485 (-)

STATUS MESSAGES

On main screen, the instrument displays the status of the dosing activities and bioxide chlorine dioxide production. See table below to better understand and solve any problems.

Shown Message	EXPLANATION / What to do
STORAGE TANK FULL	Product ready and storage tank full. Chlorine dioxide is ready to be used.
MAXIMUM TIME REACHED	Use chlorine dioxide as soon as possibile for better results.
PROBE FLOW ALARM	Check plant's flow and probes.
CHLORINE DIOXIDE IN STORAGE NO LONGER USABLE	Chlorine dioxide life expired. Discharge storage tank.
WAITING FOR FLOW BACK	Instrument is waiting for flow back
CHECKING FOR FLOW RELIABILITY	Instrument noticed that the flow is back and it's testing reliability during set time
CHECK EV	Check reaction tank emptying solenoid valve (7) for anomalies

In the event of a anomaly (e.g.: temporary loss of power and return to activity) the instrument will enter into a "SAFE MODE" or "ALARM MODE". Please use the below procedure to return to normal working mode:

- check alarm type and fix it (e.g: low level in tank, re-fill it)
- open drain tap (11) and wait for about one minute
- move cursor over RESTART and press WHEEL
- when instrument shows "PLEAS OPEN DRAIN" open drain tap (11)
- wait until instrument shows "PLEASE CLOSE DRAIN" then close drain tap (11)
- restore is complete when all 6 "D" letters (level down) are shown in upper right part of the display.

ERMES

The web-based application ERMES allows plants remote control: with it is possibile to read, analize and modify instruments parameters from PCs, smartphones or tablets.

PLUS

- It reduces plant intervention and inspections.
- It reports on the current status of the network's devices and connections (probes, outputs, alarms, setpoints)
- It instantly gives notification of alarms by sms or email
- It generates an up to date report of all plant instruments
- It can display the instruments activity log as line graphs and charts and it can download it to your pc in excel or pdf format

HOW TO USE WEB ERMES

Enter the website **www.ermes-server.com** and, after registration, set plants.
EMEC instruments with ETHERNET, GSM/GPRS or WiFi. configuration will be immediatly connected and available for remote control. Furthermore, with ERMES you can receive alarm messages via email, with different report option on instrument status. If instrument has been bought with the GSM/GPRS option it's possible to receive SMS reports on any mobile phone.

Read "COMMUNICATION" chapters to better understand how to configu e the instrument and refer to ERMES WEB manual for further info.

WIFI

Within Communication Menu choose "WIFI" to bring wireless sub-menu.To manually enter the WiFi Network highlight and click on first line to the right side of the menu and choose cryptography type (WPA, WEP or OPEN). Otherwise move cursor below to choose within an existing network. If network doesn't apper move cursor on SCAN and click on it. Wait until desired wireless network appears, then move wheel on it then click. Enter WEP / WPA / WPA2 password (if required) and wait until connection has been estabilished and WiFi signal strength appears. To obtain a reliable connection be sure to install the controller within WiFi range. See your router features and installation procedure for best results. Note: if an existing network doesn't appear at first scan please repeat scanning procedure after a while.

COMMUNICATION ICONS

When in main screen is possible to know connection status by following these icons located in the upper right part of the screen.

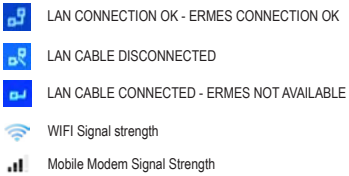

SAFETY OPTIONAL SYSTEM

Dioxide Probe

Use this function to setup sensor that detects dioxide into air. This option is useful during a plant's dioxide leakage to prevent dangerous high dioxide concentration. **Do not edit this function if not otherwise specified or if unsure of value to enter.**

Other options are:

MAIN MENU: HIDE to not show a warning message. Use exclusively if no sensor is connected.

MAIN MENU: SHOW to enable warning message and related alarm on main screen. Enabled by default.

Attention

Attention: this procedure assumes that the instrument is con igured properly and connected to a working sensor, otherwise the results may not be reliable.

Dioxide Alarm

Use this menu to set a maximum dioxide into air concentration value into environment. Don't change this value if unsure of value to enter. **Do not edit this function if not otherwise specified**

mA CURRENT OUTPUTS

Use this menu to set mA current outputs for dioxide pump (PROD, production) and dioxide probe (READING). mA values can be set between: 0/20 mA or 4 / 20mA based on pulsers per minute (PROD.) and parts per million (READING).

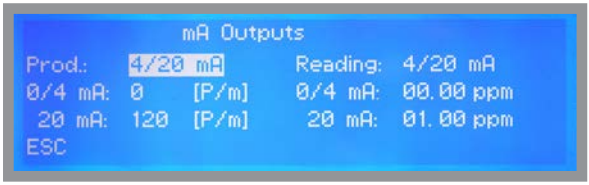

Current outputs on mainboard are:

PROD (Production, Dioxide Pump) Terminal 13 (GND); 15
READING (dioxide sensor reading) Terminal 13 (GND); 16

Reaction Tank Test

For the most accurate dosing results the reaction tank capacity can be measured. Click on “START” to open drain-valve and dump tank content. Press “START” and close the drain-valve to stop..

ALARM CONTACT SETUP WHEN WARNING

To enable or disable the controller to stop in case of WARNING (non-blocking case) for each type of alarm, scroll through the settings menu to the end and select the required function, then enable to stop the controller with YES ore leave the warning message on with NO. Choosing NO the instrument will not stop but will display the corresponding alarm message.

L.HCL: HCl level

L.NA: Na level

TFull: Storage tank full

Flow: No Flow

Limit: Limit on reading values

Time: Water filling time exceede

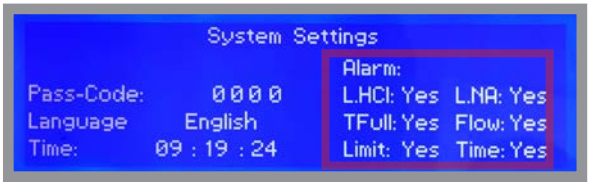

Logical working scheme

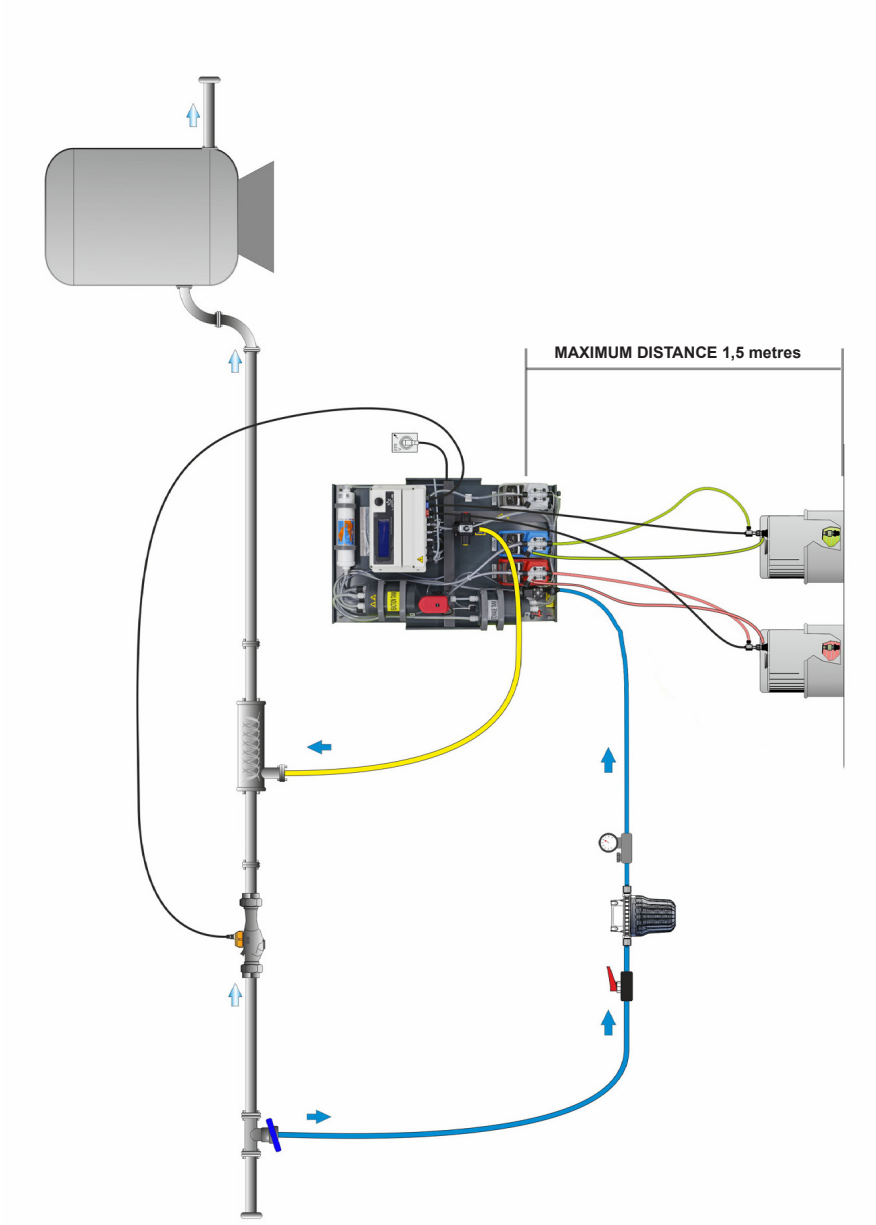

Maintenance

OPERATOR PROTECTION. Use safety equipment according to the company regulations. Use this safety equipment within the work area during installation, service and when handling chemicals:

• protective mask
• protective gloves
• safety goggles
• ear plugs or hear muffs
• further security device, if necessary.

POWER SUPPLY DISCONNECTION. Always disconnect main power before you perform any installation or maintenance tasks. Failure to disconnect power will result in serious physical injury. Installation and maintenance tasks should be carried out by AUTHORIZED AND QUALIFIED PERSONNEL only in accordance with local regulations. LOUTUS AIR does not require any particular maintenance except for the typical use of traditional dosing pumps. Therefore, it is advisable to check the fittings and lances in the tanks to prevent leaks and, if necessary, to clean or replace the suction, delivery and discharge pipes, paying attention to any leaks or residues. In order to facilitate the cleaning and maintenance procedure of the LOTUS AIR, the “CLEAN” menu is available (see relative paragraph). Always adopt all the individual and environmental safety devices provided in the presence of dioxide. In this regard it is necessary to read carefully the security chapters in this manual.

A maintenance schedule includes these types of inspections:
• Routine maintenance and inspections
• Three-month inspections
• Annual inspections

Routine maitenance and inspections
Perform these tasks whenever you perform routine maintenance:
• Ensure that there are no leaks from the orings.
• Check electrical wiring
• Check for unusual noise and vibration (noise allowed 70.4 dbA; ± 5 dB).
• Check the pump and piping for leaks.
• Check for corrosion on parts of the pump and / or on hoses.

Three-month inspections
Perform these tasks every three months:
• Check that the tightenings.
• Check the mechanical seal if the pump has been left idle.
• Check the correct operation of motorized valve (closing opening)
• Check the water inlet filter and the solenoid valve seal
• Check the reaction and storage level probes.

Annual inspections and replacements kit
Perform these inspections one time each year:
• Calibrate chlorine dosing pump
• Check the pump capacity (as per nameplate).
• Check the pump pressure (as per nameplate).
• Check the pump power (as per nameplate).
• Check electrovalve a water suction valve
• Replace pumps heads and carbon filter (ask for a replacement kit

Index

Safety	page 3
Introduction and first start	page 10
Hydraulic connections	page 13
Electrical connections	page 19
Main screen	page 22
System Settings	page 23
Probes	page 25
Water Meter	page 28
Mode Selection	page 29
Alarms	page 31
Pump Calibration	page 32
Service	page 33
Clean	page 33
Priming / Manual Outputs operation	page 33
Communication (TCP/IP & GPRS)	page 34
Communication (Messages Setup & RS485)	page 35
Communication (Log & Logbook) / Reaction Time Test	page 36
Communication (Wi-Fi) optional	page 36
MODBUS	page 37
Status messages	page 38
ERMES / Communication Icons	page 39
DIOXIDE SENSOR (optional)	page 40
mA Current Outputs	page 41
Alarm contact setup when WARNING	page 42
Logical working scheme	page 43
Maintenance	page 44

Information on this manual may contain technical inaccuracies or typographical errors.
The information contained may be changed at any time without prior notification or obligation.

PRECAUTIONS RELATING TO DIRECTIVES, REGULATIONS AND STANDARDS

§ CE/EU and UKCA marking

We guarantee that this product meets the essential requirements of the applicable Directives and Regulations based on the following specifications. Please carefully consider the following specifications for use of the product in European Union member countries and the United Kingdom.

• CE/EU harmonized directives and standards

Directives
DIRECTIVE 2006/42/EC
DIRECTIVE 2014/35/EU
DIRECTIVE 2014/30/EU
DIRECTIVE 2011/65/EU
DELEGATED DIRECTIVE (EU) 2015/863

Harmonized standards
EN ISO 12100
EN 809
EN ISO 20361
EN IEC 61326-1
EN 61010-1
EN IEC 63000

• UKCA harmonized regulations and standards

Regulations
2008 No. 1597
2008 2016 No. 1091
2016 No. 1101
2012 No. 3032

Harmonized standards
BS EN ISO 12100
BS EN 809
BS EN ISO 20361
BS EN IEC 61326-1
BS EN 61010-1
BS EN IEC 63000

Disposal of end-of-life equipment by users

This symbol warns you not to dispose of the product with normal waste. Respect human health and the environment by giving the discarded equipment to a designated collection center for the recycling of electronic and electrical equipment. For more information visit the online site.

When dismantling a pump please separate material types and send them according to local recycling disposal requirements. We appreciate your efforts in supporting your local Recycle Environmental Program. Working together we'll form an active union to assure the world's invaluable resources are conserved.