"MTOWER CL"
CONTROL INSTRUMENT

Data Sheet

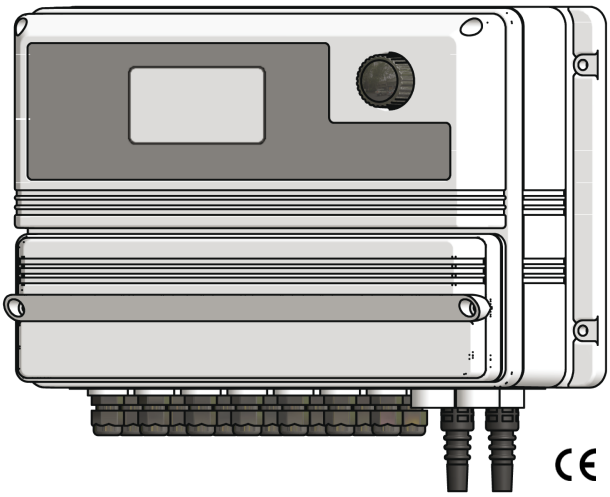

MTOWER CL is a fully featured cooling towers controller for Chlorine and Conductivity, with two-way biocide options and inhibitor / bleed control.

Wheel Control with easy setup interface.

Communication Ready.

FEATURES

- 2 channels controlling system
- Large LCD backlight graphic display
- Wheel control with easy setup interface
- Bleed and Feeders live display
- Universal power supply
- Permanent data storage
- Multiple alarms control :
  - Hi & Low conductivity
  - Hi & Low Chlorine
  - Bleed timeout
  - Chemicals level
  - Flow

INPUTS

- Conductivity probe
- Temperature probe (compensated)
- Flow meter makeup
- Flow meter bleed
- 2 Biocide levels
- 2 Biocide activator levels
- Inhibitor level
- Flow sensor
- Chlorine amperometric cell
- Chlorine level

OUTPUTS

- Bleed
- Inhibitor
- 2 Biocides
- 2 Biocides activators
- Alarm
- 0/20 or 4/20 mA Conductivity
- 0/20 or 4/20 Chlorine
- 0/20 or 4/20 Temperature
- 1 proportional Chlorine
- 1 digital Chlorine
- Serial Port
- Inhibitor proportional

Via Donatori di Sangue, 1 - 02100 Rieti (Italy)
+39 074622841 | emecpumps.com

Specifications subject to change without notice | R2025

emec SIMPLE AS WATER

IQNET CERTIFIED MANAGEMENT SYSTEM
qualityaustria SYSTEM CERTIFIED
ISO 9001:2015 No.07728/0
ISO 14001:2015 No.00997/0
ISO 45001:2018 No.01121/0

"MTOWER CL"
CONTROL INSTRUMENT

Data Sheet

ELECTRICAL

SIGNAL INPUT
Terminal block

POWER SUPPLY
UNIVERSAL 90÷265 VAC; 50/60 Hz

POWER CONSUMPTION
Average 20 W

THE WHEEL CONTROLLING SYSTEM

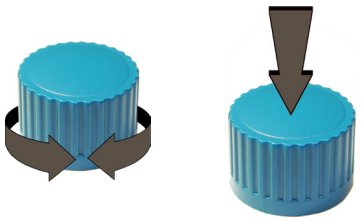

CONTROL PARAMETERS

Conductivity
Timer 1 (1 - 2 - 4 Weeks)
Timer 2 (1 -2 - 4 Weeks)

Inhibitor:

Feed and Bleed	Chlorine
Feed as a percentage of bleed	PWM / On-Off
Feed as a percentage of time	Proportional
Driven by pulse sender water meter	
PPM setup with water meter	

ENCLOSURE

IP65 enclosure (NEMA4x)
MTOWER CL control instruments are manufactured in ABS housing to ensure protection against aggressive chemicals and tough environment.

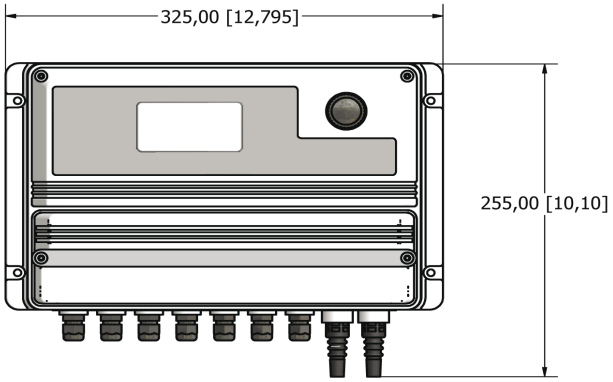

ENVIRONMENT

-10°C ÷ 50°C (14°F ÷ 122°F)
0÷95% (non condensing) relative humidity

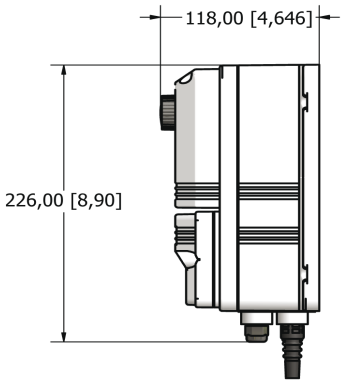

mm[inches]

Via Donatori di Sangue, 1 - 02100 Rieti (Italy)
+39 074622841 | emecpumps.com

Specifications subject to change without notice | R2025

emec SIMPLE AS WATER

IQNET CERTIFIED MANAGEMENT SYSTEM
qualityaustria SYSTEM CERTIFIED
ISO 9001:2015 No.07728/0
ISO 14001:2015 No.00997/0
ISO 45001:2018 No.01121/0