LDOSIN PLUS

Data Sheet

REVERSE OSMOSIS SYSTEM

Reverse osmosis controllers enables the process and control of osmosis in industrial plants.

The main working mode are: continuous production without level control, one level control production, two levels control with manual hysteresis and production based on the amount set.

Combined with probes and probe holders, they can be assembled on panels to have a complete turnkey control system.

Remotely controlled using ERMES web app system.

SOFTWARE
English and French software available. Ask for Deutsch.

CUSTOMIZATION
Instruments can be customized with client logo on frontal panel.

STAND-BY INPUT

HIGH LEVEL INPUT

LOW LEVEL INPUT

PERMANENT DATA STORAGE (WITHOUT BATTERY)

AUTOMATIC TEMPERATURE COMPENSATION
With PT100 temperature probe.

ALARMS
Alarm reporting for: low pressure, high pressure, high osmosis pump temperature, threshold.

DISPLAY
Probe readings, alarms notification are shown on display.

DUE USCITE IN CORRENTE

WATER METER OUTPUT 0/4-20mA

TWO WATER METER INPUT

RELAIS ALARM (FREE CONTACT)

THREE SETPOINT
Input conductivity, outpu conductivity and temperature.

WORKING MODES
- Production
- Washing
- Waiting
- Manual production (only with water meter)

MEMBRANE WASHING
Washing with input valve or osmosis pump.

SETTING WASHING
At start production, end production, cyclic and periodic to preserve the membrane.

Via Donatori di Sangue, 1 - 02100 Rieti (Italy)
+39 074622841 | emecpumps.com

Specifications subject to change without notice | R2025

emec SIMPLE AS WATER

IQNET CERTIFIED MANAGEMENT SYSTEM
qualityaustria SYSTEM CERTIFIED
ISO 9001:2015 No.07728/0
ISO 14001:2015 No.00997/0
ISO 45001:2018 No.01121/0

DIMENSIONS (mm)

VISTA FRONTALE

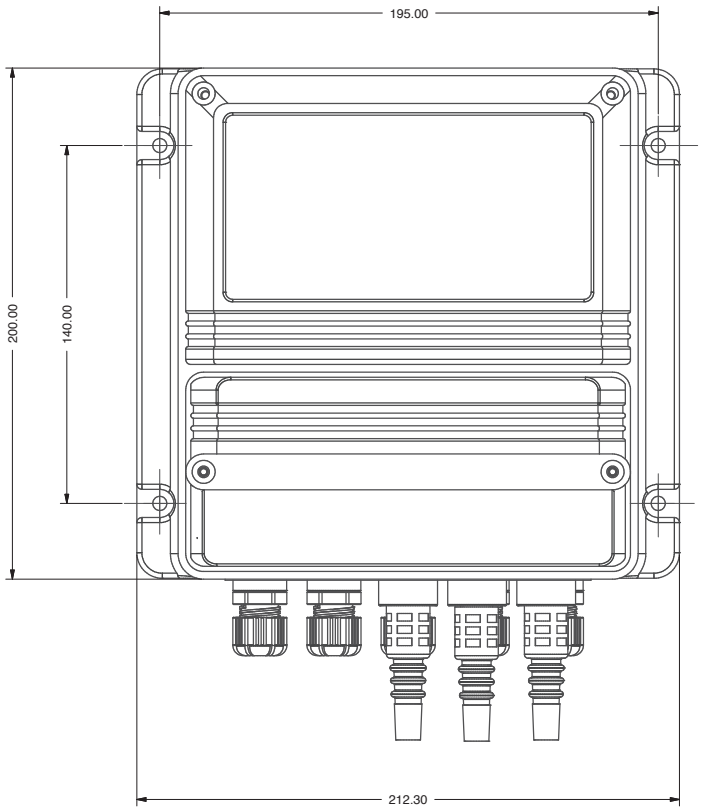

VISTA LATERALE

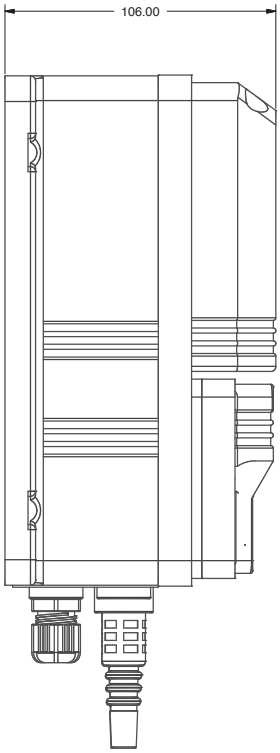

DIMENSIONS RACK (mm)

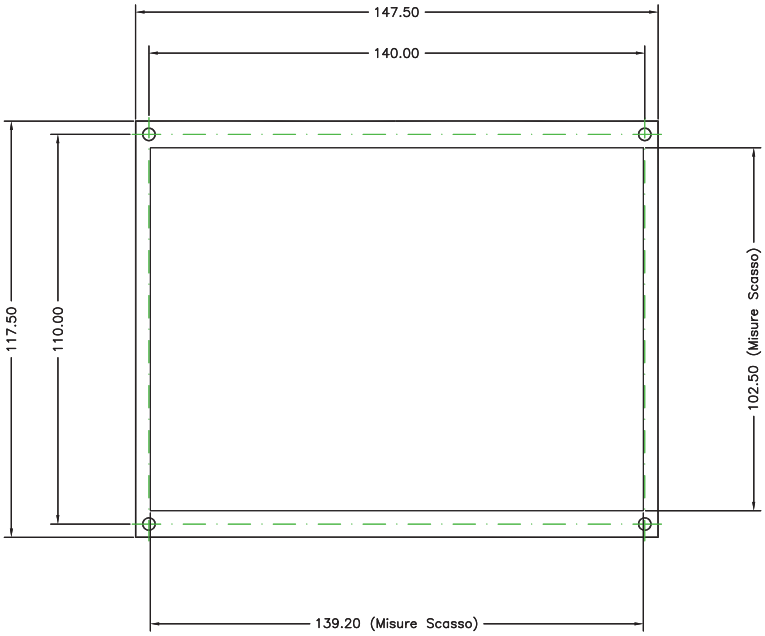

LDOSIN PLUS

	LDOSIN PLUS
MEASURED PARAMETER	Conductivity
RANGE	0-300 µS (K=0,1); resolution 0,1 µS 0-3000 µS (K=1); resolution 1 µS 0-30 mS (K=1; K=10); resolution 0,01 mS 0-300 mS, only with probe (K=10); resolution 0,1 mS
TEMPERATURE COMPENSATION	PT100
INPUT SIGNAL	PCB
POWER SUPPLY	85-264 VAC; 50/60 Hz
AVERAGE CONSUMPTION	25 W
ON/OFF OUTPUT	4 relays; 5A @ 230 VAC (fuse protected) 1 relays; 1,5kw @ 230 VAC (fuse protected) 1 relays; 2A a contatto libero (fuse protected)
ALARM OUTPUT	85-264VAC alarm output
INPUT	Stand-by Low level High level Low pressure High pressure High temperature alarm for osmosis pump Dosing pump alarm Generic alarm Temperature probe 2 water meter input 2 mA water meter input
OUTPUT	5 relais output 2 mA output Main Alarm (free contact)
ENVIRONMENT TEMPERATURE	-10°C ... 50°C (14°F ... 122°F)
PROTECTION	IP65 - % working RH: 85% with ≤40 °C; 70% at 50 °C (non condensing)
POLLUTION LEVEL	2
ENCLOSURE	ABS
TEST/CERTIFICATION	CE
DIMENSIONS	refer to the drawing
WEIGHT	1,45 kg (3.1967 lb)
INSTALLATION	vertical wall (4 fixing holes
OPTIONS	• 12 VDC power supply • 24 VDC power supply • 24 VAC power supply