# "T" series Metering Pumps

Data Sheet

## "TA Self Venting"

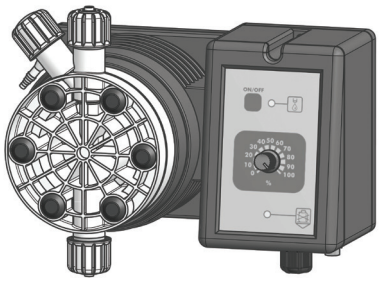

- Wall mounted
- Stroke speed adjustment
- Microprocessor technology
- Manual venting (T) or self venting (TA) PVDF pump head
- All liquid ends (pump head, injection valve, foot filte , delivery hose) are in PVDF

| | |
|---|---|
| Power supply: | 230 VAC (190-265 VAC) - 50/60 Hz<br>115 VAC (90-135 VAC) - 50/60 Hz<br>24 VAC (20-32 VAC) - 50/60 Hz<br>24 VDC (20-32 VDC)<br>12 VDC (10-16 VDC) |
| Pump Strokes | 0-120 |
| Environment Temperature: | 0-45°C (32-113°F) |
| Chemical Temperature: | 0-50°C (32-122°F) |
| Packaging and Transporting Temperature: | -10-50°C |
| Installation Class: | II Pollution Level: 2 |
| Audible Noise: | 62.0 db(A) |
| Protection Degree Rating: | IP 65 (% working RU: 85% T<=40°C; 70% T=50°C - without condensing water) |
| Max altitude: | 2000 m |

## Configura ion code

| MODELS | | | |
|---|---|---|---|
| **Code T** | **Cod. TA** | **MOD.** | **DESCRIPTION** |
| **CO** | **OA** | "CO" | Constant pump with stroke speed (frequency) adjustment. |
| **CL** | **CA** | "CL" | Constant pump with level control, stroke speed (frequency) adjustment. |

| CAPACITIES | | | | | |
|---|---|---|---|---|---|
| **T Models** | | | Delivey hose (PVDF) | Suction hose | Pump head mod. |
| **2005** | 5 l/h at 20 bar | 1.32 GPH at 290 PSI | 4 x 6 | 4 x 6 | L |
| **0515** | 15 l/h at 5 bar | 3.96 GPH at 73 PSI | 6 x 8 | 6 x 8 | N |
| **0420** | 20 l/h at 4 bar | 5.28 GPH at 58 PSI | 6 x 8 | 6 x 8 | N |
| **0330** | 30 l/h at 3 bar | 7.93 GPH a 44 PSI | 8 x 10 | 8 x 12 | S |
| **0150** | 50 l/h at 1 bar | 13.2 GPH a 15 PSI | 8 x 10 | 8 x 12 | S |
| **00100** | 100 l/h at 0 bar | 26.4 GPH at 0 PSI | 12 x 18 PVC reinforced | 12 x 18 PVC reinforced | T |
| **TA Models** | | | Delivey hose (PVDF) | Suction hose | Pump head mod. |
| **203.2** | 3.2 l/h at 20 bar | 0.85 GPH at 290 PSI | 4 x 6 | 4 x 6 | LA |
| **0510** | 10 l/h at 5 bar | 2.64 GPH at 73 PSI | 6 x 8 | 6 x 8 | NA |
| **0413** | 13 l/h at 4 bar | 3.43 GPH at 58 PSI | 6 x 8 | 6 x 8 | NA |
| **0320** | 20 l/h at 3 bar | 5.3 GPH at 43.5 PSI | 8 x 10 | 8 x 12 | SA |
| **0135** | 35 l/h at 1 bar | 9.2 GPH at 14.5 PSI | 8 x 10 | 8 x 12 | SA |

## Model T CO 2005 K 00 00

| LIQUID ENDS | | | | | | | | |
|---|---|---|---|---|---|---|---|---|
| | **HEAD** | **ORINGS** | **VALVE** | | **DIAPHRAGM** | **HOSES** | | **VISCOSITY** |
| | | | Body | Balls | | Delivery | Suction | Max CPS |
| K | PVDF | FKM B | PVDF | Ceramic | PTFE | PVDF | PVC | 100 |
| P | PVDF | EPDM | PVDF | Ceramic | PTFE | PVDF | PVC | 100 |
| Y | PVDF | Nytrile | PVDF | Ceramic | PTFE | PVDF | PVC | 100 |
| V | PP | FKM B | PP | Ceramic | PTFE | PVDF | PVC | 100 |
| D | PP | EPDM | PP | Ceramic | PTFE | PVDF | PVC | 100 |
| W | PP | Nytrile | PP | Ceramic | PTFE | PVDF | PVC | 100 |
| J | PVDF | FKM B + PTFE | PVDF | Ceramic | PTFE | PVDF | PVC | 100 |
| A | Acrylic | FKM B | PVDF | Ceramic | PTFE | PVDF | PVC | 100 |
| Z | SS | FKM B | SS | SS | PTFE | N/A | N/A | 100 |
| $ | Acrylic | FKM B | PP | SS + Hastelloy spring | PTFE | PE | PVC | 8000 * |

* Using high viscosity pump head mod. $, pump output may results lower in some applications.

| POWER SUPPLY | |
|---|---|
| **00** | 230 VAC Schuko plug |
| **0S** | 230 VAC australian plug |
| **01** | 230 VAC without plug |
| **03** | 115 VAC US plug |
| **04** | 24 VAC without plug |
| **05** | 12 VDC * |
| **07** | 24 VDC |

* On some models only.

Via Donatori di Sangue, 1 - 02100 Rieti (Italy)
+39 074622841 | emecpumps.com

emec SIMPLE AS WATER

Specifications subject to change without notice | R2025

IQNET CERTIFIED MANAGEMENT SYSTEM
qualityaustria SYSTEM CERTIFIED
ISO 9001:2015 No.07728/0
ISO 14001:2015 No.00997/0
ISO 45001:2018 No.01121/0

# "T" series Metering Pumps

Data Sheet

## "TA Self Venting"

| INFORMATION | | | | | | |
|---|---|---|---|---|---|---|
| **T** | **Strokes speed** | | **Power consumption at max flow (230 VAC)** | **Power consumption at max flow (115 VAC)** | **Power consumption at max flow (24 VAC/VDC)** | **Weight** |
| | min | max | | | | |
| **2005** | 12 | 120 | 27 Watt | 21 Watt | n/a | 5,7 Kg (12,6 Lbs) |
| **0515** | 12 | 120 | 27 Watt | 15 Watt | 14 Watt | |
| **0420** | 12 | 120 | 27 Watt | 21 Watt | n/a | |
| **0330** | 12 | 120 | 27 Watt | 21 Watt | n/a | |
| **0150** | 12 | 120 | 27 Watt | 21 Watt | n/a | |
| **00100** | 12 | 120 | 27 Watt | 21 Watt | n/a | |
| **TA** | **Strokes speed** | | **Power consumption at max flow (230 VAC)** | **Power consumption at max flow (115 VAC)** | **Power consumption at max flow (24 VAC/VDC)** | **Weight** |
| | min | max | | | | |
| **203,2** | 12 | 120 | 27 Watt | 21 Watt | n/a | 5,7 Kg (12,6 Lbs) |
| **0510** | 12 | 120 | 27 Watt | 15 Watt | 14 Watt | |
| **0413** | 12 | 120 | 27 Watt | 21 Watt | n/a | |
| **0320** | 12 | 120 | 27 Watt | 21 Watt | n/a | |
| **0135** | 12 | 120 | 27 Watt | 21 Watt | n/a | |

| MORE INFORMATION | | | | | | | |
|---|---|---|---|---|---|---|---|
| **T** | **Flow** | | | | **cc per Stroke** | **Max injection pressure** | |
| | min cc/h | max l/h | Min GPH | Max GPH | **Max** | **bar** | **PSI** |
| **2005** | 500 | 5 | 0,13 | 1,32 | 0,7 | 20 | 290 |
| **0515** | 1500 | 15 | 0,39 | 3,96 | 2,1 | 5 | 73 |
| **0420** | 2000 | 20 | 0,52 | 5,28 | 2,8 | 4 | 58 |
| **0330** | 3000 | 30 | 0,79 | 7,93 | 4,2 | 3 | 43 |
| **0150** | 5000 | 50 | 1,32 | 13,2 | 7 | 1 | 15 |
| **00100** | 10000 | 100 | 2,64 | 26,4 | 14 | 0 | 0 |
| **TA** | **Flow** | | | | **cc per Stroke** | **Max injection pressure** | |
| | min cc/h | max l/h | Min GPH | Max GPH | **Max** | **bar** | **PSI** |
| **203,2** | 96 | 3,2 | 0,025 | 0,85 | 0,44 | 20 | 290 |
| **0510** | 300 | 10 | 0,079 | 2,64 | 1,39 | 5 | 73 |
| **0413** | 390 | 13 | 0,103 | 3,43 | 1,80 | 4 | 58 |
| **0320** | 600 | 20 | 0,16 | 5,3 | 2,78 | 3 | 43,5 |
| **0135** | 1050 | 35 | 0,28 | 9,2 | 4,86 | 1 | 14,5 |

Via Donatori di Sangue, 1 - 02100 Rieti (Italy)
+39 074622841 | emecpumps.com

Specifications subject to change without notice | R2025

emec SIMPLE AS WATER

IQNET CERTIFIED MANAGEMENT SYSTEM
qualityaustria SYSTEM CERTIFIED
ISO 9001:2015 No.07728/0
ISO 14001:2015 No.00997/0
ISO 45001:2018 No.01121/0

# "T" series Metering Pumps

Data Sheet

"TA Self Venting"

Measurement unit: mm

"S" - "T" PUMP HEAD

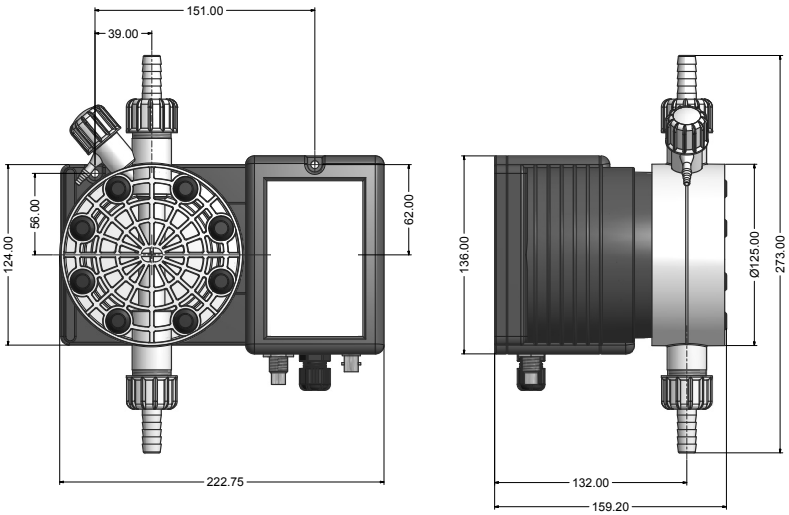


"N" - "P" PUMP HEAD

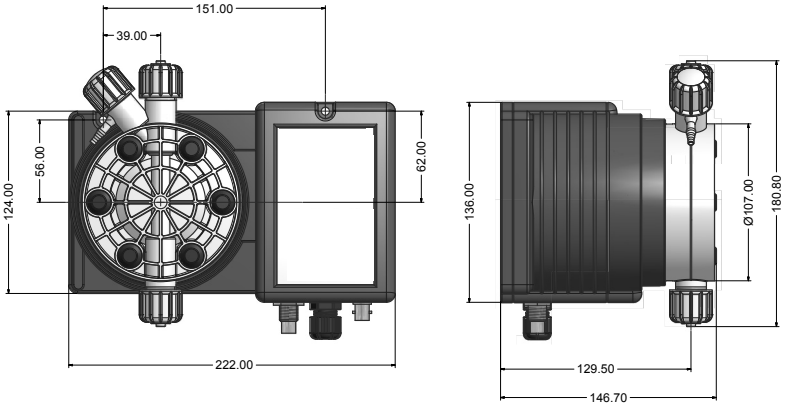


Via Donatori di Sangue, 1 - 02100 Rieti (Italy)
+39 074622841 | emecpumps.com

Specifications subject to change without notice | R2025

emec SIMPLE AS WATER

IQNET CERTIFIED MANAGEMENT SYSTEM

qualityaustria SYSTEM CERTIFIED

ISO 9001:2015 No.07728/0
ISO 14001:2015 No.00997/0
ISO 45001:2018 No.01121/0