"AMS PLUS" series Metering Pumps

Data Sheet

"AMSA PLUS"

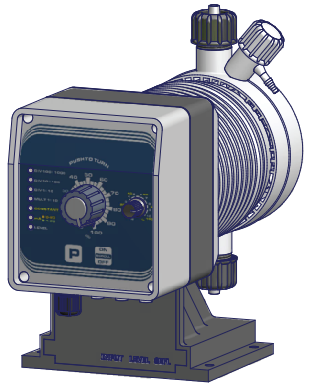

- Foot mounted
- Constant or proportional feeding
- Microprocessor technology
- Manual stroke length adjustment
- Manual (**AMS**) or self (**AMSA**) venting pump head
- Enclosure .....PP
- Environment temperature.....10-45°C (55-113°F)
- Chemical temperature.....0-50°C (32-122°F)
- Transportation and storage temperature .....-10-50°C (14-122°F)
- Altitude .....2000 m AMSL
- Installation class II
- Audible noise.....57.4 db(A)
- Protection degree .....IP65 (% working RU: 85% T<=40°C; 70% T=50°C - without condensing water)

Configuration code

MODELS			
Code AMS	Code AMSA	MOD.	DECRIPTION
MU	**AU**	AMS PLUS	Constant proportional pump with level control. Working mode: - constant - constant with divider (1/10) - pulse divider (1/10; 10/100; 100/1000) - pulse multiplier (1/10) - mA signal current (0/4 mA = 0 pulses: 20mA = max pulses)
CP	**AL**	AMS CL PLUS	Constant pump with level control. Speed reducer (1/10)
UO	**AC**	AMS CO PLUS	Constant pump with speed reducer (1/10)

CAPACITY					
AMS			Delivery hose (PVDF)	Suction hose	Pump head mod.
2505	5 l/h at 25 bar	1.32 GPH at 362 PSI	4 x 6	4 x 6	L
1510	10 l/h at 15 bar	2.64 GPH at 217 PSI	4 x 6	4 x 6	M
1015	15 l/h at 10 bar	3.96 GPH at 145 PSI	6 x 8	6 x 8	M
0720	20 l/h at 7 bar	5.28 GPH at 101 PSI	6 x 8	6 x 8	N
0340	40 l/h at 3 bar	10.56 GPH at 43 PSI	8 x 10	8 x 12	S
0260	60 l/h at 2 bar	15.85 GPH at 29 PSI	8 x 10	8 x 12	T
AMSA			Delivery hose (PVDF)	Suction hose	Pump head mod.
253.2	3.2 l/h at 25 bar	0.85 GPH at 362 PSI	4 x 6	4 x 6	LA
1506	6 l/h at 15 bar	1.59 GPH at 217 PSI	4 x 6	4 x 6	MA
1010	10 l/h at 10 bar	2.64 GPH at 145 PSI	6 x 8	6 x 8	MA
0713	13 l/h at 7 bar	3.43 GPH at 101 PSI	6 x 8	6 x 8	NA
0330	30 l/h at 3 bar	7.9 GPH at 43 PSI	8 x 10	8 x 12	SA
0238,5	38,5 l/h at 2 bar	10.17 GPH at 29 PSI	8 x 10	8 x 12	TA

Model A | UO | 2505 | K | 00 | 00 |

LIQUID ENDS								
	HEAD	ORINGS	VALVE		DIAPHRAGM	HOSES [1]		VISCOSITY
			Body	Balls		Delivery	Suction	Max CPS
K	PVDF	FKM B	PVDF	Ceramic	PTFE	PVDF	PVC	100
P	PVDF	EPDM	PVDF	Ceramic	PTFE	PVDF	PVC	100
Y	PVDF	Nytrile	PVDF	Ceramic	PTFE	PVDF	PVC	100
V	PP	FKM B	PP	Ceramic	PTFE	PVDF	PVC	100
D	PP	EPDM	PP	Ceramic	PTFE	PE	PVC	100
W	PP	Nytrile	PP	Ceramic	PTFE	PE	PVC	100
J	PVDF	FKM B + PTFE	PVDF	Ceramic	PTFE	PVDF	PVC	100
M	PVDF	EPDM + PTFE	PVDF	Ceramic	PTFE	PVDF	PVC	100
S	PVDF	Silicone	PVDF	Ceramic	PTFE	PVDF	PVC	100
A	Acrylic	FKM B	PVDF	Ceramic	PTFE	PVDF	PVC	100
Z[3]	SS	FKM B	SS	SS	PTFE	N/A	N/A	100
$	Acrylic	FKM B	Polypropylene	SS + Hastelloy spring	PTFE	Polyethylen	PVC	8000 [2]

[1] Size may be different from standard.
[2] Using high viscosity pump head mod. $, pump output may results lower in some applications.

POWER SUPPLY	
00	230 VAC Schuko plug
0S	230 VAC australian plug
01	230 VAC without plug
03	115 VAC US plug
04	24 VAC without plug
05	12 VDC *
07	24 VDC
* On some models only.	

Via Donatori di Sangue, 1 - 02100 Rieti (Italy)
+39 074622841 | emecpumps.com

emec SIMPLE AS WATER

Specifications subject to change without notice | R2025

IQNET CERTIFIED MANAGEMENT SYSTEM
qualityaustria SYSTEM CERTIFIED
ISO 9001:2015 No.07728/0
ISO 14001:2015 No.00997/0
ISO 45001:2018 No.01121/0

"AMS PLUS" series Metering Pumps

Data Sheet

"AMSA PLUS"

Technical features

INFORMATION						
AMS	Strokes speed		Stroke length range reliability	Power consumption at max flow (230 VAC)	Power consumption at max flow (115 VAC)	Weight
	min	max				
2505	12	120	from 30% to 100%	42 Watt	24 Watt	9 Kg (19.8 Lbs)
1510	12	120				
1015	12	120				
0720	12	120				
0340	12	120				
0260	12	120				
AMSA	Strokes speed		Stroke length range reliability	Power consumption at max flow (230 VAC)	Power consumption at max flow (115 VAC)	Weight
	min	max				
253.2	12	120	from 30% to 100%	42 Watt	24 Watt	9 Kg (19.8 Lbs)
1506	12	120				
1010	12	120				
0713	12	120				
0330	12	120				
0238,5	12	120				

MORE INFORMATION								
AMS	Flow				cc per Stroke		Max injection pressure	
	min cc/h	max l/h	Min GPH	Max GPH	min	max	bar	PSI
2505	150	5	0,039	1.32	0,21	0.70	25	362
1510	300	10	0,079	2.64	0,42	1.4	15	217
1015	450	15	0,118	3.96	0.62	2.08	10	217
0720	600	20	0,158	5.28	0,83	2.8	7	101
0340	1200	40	0,317	10.56	1,67	5.6	3	43
0260	1800	60	0,475	15.85	2,31	7,7	2	29
AMSA	Flow				cc per Stroke		Max injection pressure	
	min cc/h	max l/h	Min GPH	Max GPH	min	max	bar	PSI
253.2	96	3.2	0,025	0.85	0.13	0.44	25	362
1506	180	6	0,047	1.59	0.25	0.83	15	217
1010	300	10	0,079	2.64	0.48	1.39	10	217
0713	390	13	0,103	3.43	0.54	1.80	7	101
0330	900	30	0.237	7.9	1.25	4.16	3	43
0238.5	1155	38.5	0.305	10.1	1.6	5.34	2	29

QUANTITY	PACKAGE CONTENT[1]
n. 1	Assembly kit
n. 1	5 X 20 delayed fuse
n. 1	Level probe with axial foot filter (PVDF) - level probe not in AMSCO PLUS mod.
n. 1	0,3 Bar injection valve (PVDF)
m 2	Delivery hose
m 2	Suction hose
m 2	Discharge hose
m 2,5	Input signal cable (only for AMS PLUS mod.)
n.1	Operating manual

[1] Accessories not included with SS pump head.

POWER SUPPLY	FUSE
230 VAC (190-265 VAC)	1,25 A
115 VAC (90-135 VAC)	1,6 A
24 VAC (20-32 VAC)	6,3 A
12 VDC (10-16 VDC)	5 A

Via Donatori di Sangue, 1 - 02100 Rieti (Italy)
+39 074622841 | emecpumps.com

Specifications subject to change without notice | R2025

emec SIMPLE AS WATER

IQNET CERTIFIED MANAGEMENT SYSTEM
qualityaustria SYSTEM CERTIFIED
ISO 9001:2015 No.07728/0
ISO 14001:2015 No.00997/0
ISO 45001:2018 No.01121/0

"AMS PLUS" series Metering Pumps

Data Sheet

"AMSA PLUS"

"N" - "P" PUMP HEAD

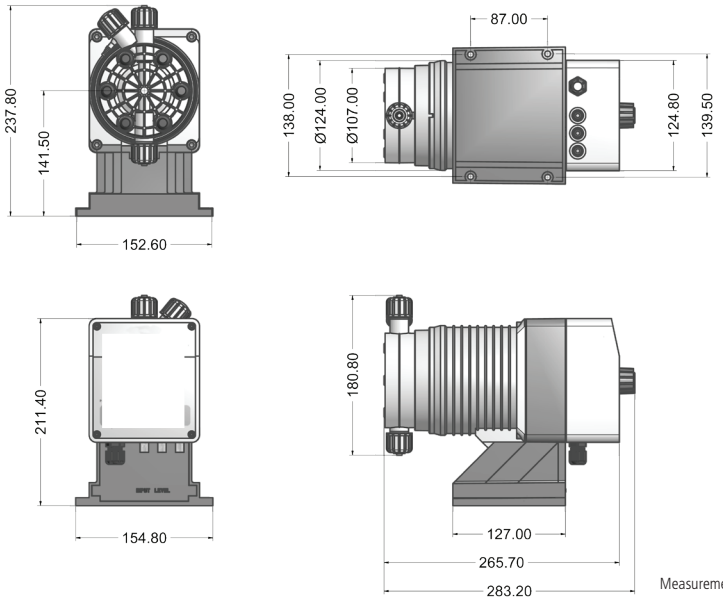

"S" - "T" PUMP HEAD

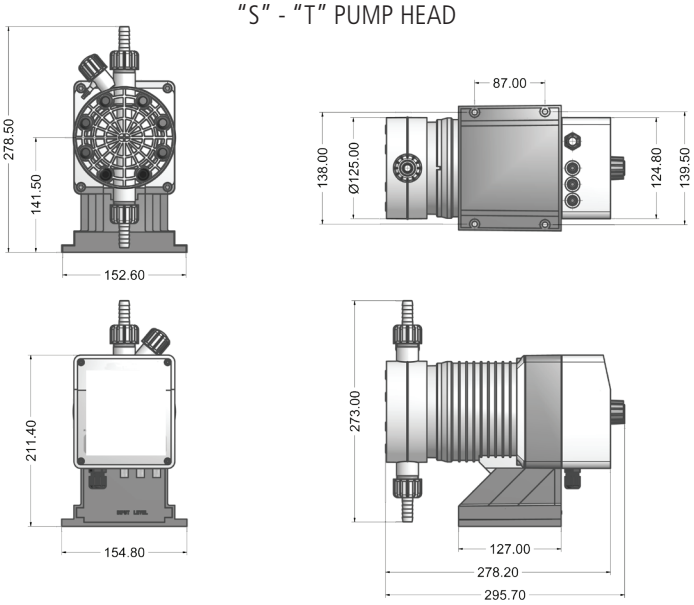

Measurement unit: mm

Via Donatori di Sangue, 1 - 02100 Rieti (Italy)
+39 074622841 | emecpumps.com

Specifications subject to change without notice | R2025

emec SIMPLE AS WATER

IQNET CERTIFIED MANAGEMENT SYSTEM

qualityaustria SYSTEM CERTIFIED

ISO 9001:2015 No.07728/0
ISO 14001:2015 No.00997/0
ISO 45001:2018 No.01121/0