R990525

# PRIUS P

PP PUMP HEAD

SS PUMP HEAD

MOTOR DRIVEN PLUNGER METERING PUMP

EN

OPERATING MANUAL

THIS OPERATING INSTRUCTIONS CONTAINS SAFETY INFORMATION THAT IF IGNORED CAN ENDANGER LIFE OR RESULT IN SERIOUS INJURY.

READ THESE INSTRUCTIONS **CAREFULLY** BEFORE USE AND KEEP THEM FOR FUTURE REFERENCE.
THE ORIGINAL INSTRUCTION IS IN ENGLISH.
INFORMATION AND SPECIFICATIONS ON THIS MANUAL COULD BE UNCORRECT OR COULD HAVE PRINTING ERRORS.
SPECIFICATIONS ARE SUBJECT TO CHANGE WITHOUT NOTICE.

Version: R1-03-17

---

| | |
|---|---|
| Descrizione Prodotto<br>*Product Description* | Pompa dosatrice a motore, serie PRIUS P<br>*Motor-driven dosing pump, PRIUS P series* |
| Codici Identificativi Prodotto<br>(i simboli "_" completano il codice del prodotto in base alla configurazione delle varianti)<br>*Product Identification Codes*<br>*(the "_" symbols complete the product code based on the configuration of the variants)* | **PP00** _ _ _ _ _ _ _ _ _ _ _ _ _ _ _ _ |

**SUMMARY**

GENERAL SAFETY GUIDELINES ..... 4
1. DESCRIPTION ..... 5
1.1 PRIUS Series ..... 5
1.3 Features ..... 8
1.3.1 PLUNGER ..... 9
2. INSTALLATION ..... 12
2.1 Installation warning ..... 12
2.2 Commissioning steps ..... 13
2.2.1 Pump location ..... 13
2.2.2 Oil filling ..... 13
2.2.3 Piping connection ..... 14
2.2.4 Pump head ..... 14
2.2.5 Foot filter ..... 14
2.2.6 Installation drawings ..... 15
3. ELECTRICAL WIRING ..... 16
3.1 Preliminary checks ..... 16
3.2 Connection diagrams ..... 16
4. START UP 18
4.1 Start up ..... 18
5. PRIMING 19
5.1 How to prime the pump ..... 19
6. MAINTENANCE ..... 20
6.1 Maintenance schedule ..... 20
6.2 Maintenance inspection ..... 20
6.3 Shutdown ..... 21
7. TROUBLESHOOTING ..... 22
7.1 Repair service ..... 22
8. COMPATIBILITY TABLE ..... 23
8.1 Chemical compatibility table ..... 23
8.2 Materials ..... 23

Figures

Fig. 1. PRIUS P pump ..... 7
Fig. 2. Installation drawings ..... 15

Tables

Tab. 1. Capacity ..... 8
Tab. 2. PRIUS P - PP pump head ..... 10
Tab. 3. PRIUS P - SS pump head ..... 11
Tab. 4. Acceptable oil for lubricating ..... 13
Tab. 5. Guide to troubleshooting. ..... 22
Tab. 6. Chemical compatibility table ..... 23

## GENERAL SAFETY GUIDELINES

Operating, installing, or maintaining the unit in any way that is not covered in this manual could cause death, serious personal injury, or damage to the equipment.

**ICON**

This manual use the following safety message icon:

**Danger!**
Indicates a hazardous situation which, if not avoided, will result in death or serious injury.

**Warning!**
Indicates a hazardous situation which, if not avoided, could result in death or serious injury

**Important** - A practice not related to personal injury or additional information.

**METERING PUMP IS INTENDED FOR CHEMICAL DOSING.**

**Use of this pump with radioactive chemicals is FORBIDDEN!**

**Keep the pump protected from sun and water. Avoid water splashes.**

**In EMERGENCIES the pump should be switched off immediately! Disconnect the power cable from the power supply!**

**When using pump with aggressive chemicals observe the regulations concerning the transport and storage of aggressive fluids!**

**Adequate measures shall be taken to prevent cross connection of chemicals!**

**Chemical feeding must be stopped during BACKWASH CYCLES AND PERIODS OF NOFLOW as these conditions may introduce the potential for chemical OVERDOSING. Not doing so may result in elevated chemical concentrations and hazerdous gas introduction into the piping, pool or spa.**

**Never operate any pumping system with a BLOCKED SUCTION AND DISCHARGE. You must take all necessary measures to avoid this condition.**

**When installing always observe national regulations!**

**Manufacturer is not liable for any unauthorized use or misuse of this product that may cause injury, damage to persons or materials.**

**Pump must be accessible at all times for both operating and servicing. Access must not be obstructed in any way!**

**Feeder should be interlocked with a no-flow protection device to automatically shut-off the pumps when there is no flow!**

**Pump and accessories must be serviced and repaired by QUALIFIED AND AUTHORIZED PERSONNEL ONLY!**

**Before any operation:**
- **always read chemical Material Safety Data Sheet (MSDS);**
- **always wear protective clothing;**
- **always discharge the liquid end before servicing the pump!**
- **empty and rinse the liquid end before work on a pump which has been used with hazardous or unknown chemicals!**

## 1. DESCRIPTION

### 1.1 PRIUS Series

PRIUS series is a motor-driven plunger series pumps with spring return mechanism.
The plunger produces the flow thanks to the suction and delivery valves on the pump head
PRIUS is a constant dosing pump.
Flow rate is determined by the stroke length. The stroke length is adjustable from 0 to 100% using the stroke length adjustment knob.

**Some functions described into this manual may need accessories not included into the pump packaging.**

PLEASE DO NOT TRASH PACKAGING. IT CAN BE USED TO RETURN THE PUMP.

## 1.2 Identification Code

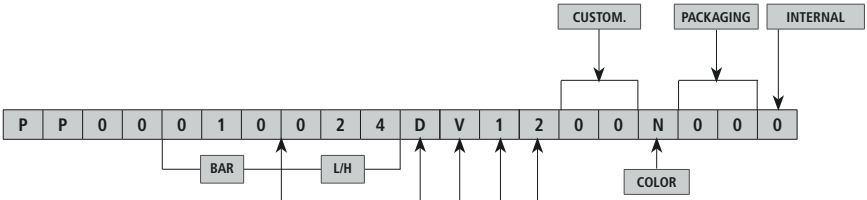


| CAPACITY | | | |
|---|---|---|---|
| 50 Hz | | 60 Hz | |
| **010024** | 24 l/h @ 10 bar | **010023** | 23 l/h @ 10 bar |
| **010013** | 13 l/h @ 10 bar | **010011** | 11 l/h @ 10 bar |
| **010010** | 10 l/h @ 10 bar | **010005** | 5 l/h @ 10 bar |
| **010005** | 5 l/h @ 10 bar | **010076** | 76 l/h @ 10 bar |
| **010080** | 80 l/h @ 10 bar | **010038** | 38 l/h @ 10 bar |
| **010043** | 43 l/h @ 10 bar | **010019** | 126 l/h @ 10 bar |
| **010032** | 32 l/h @ 10 bar | **010126** | 126 l/h @ 10 bar |
| **010016** | 16 l/h @ 10 bar | **010063** | 63 l/h @ 10 bar |
| **010130** | 130 l/h @ 10 bar | **010031** | 31 l/h @ 10 bar |
| **010070** | 70 l/h @ 10 bar | **010195** | 195 l/h @ 10 bar |
| **010052** | 52 l/h @ 10 bar | **010097** | 97 l/h @ 10 bar |
| **010026** | 26 l/h @ 10 bar | **010048** | 48 l/h @ 10 bar |
| **010210** | 210 l/h @ 10 bar | **010300** | 300 l/h @ 10 bar |
| **010113** | 113 l/h @ 10 bar | **010150** | 150 l/h @ 10 bar |
| **010084** | 84 l/h @ 10 bar | **010075** | 75 l/h @ 10 bar |
| **010042** | 42 l/h @ 10 bar | **007469** | 469 l/h @ 7 bar |
| **010320** | 320 l/h @ 10 bar | **007234** | 234 l/h @ 7 bar |
| **010172** | 172 l/h @ 10 bar | **007117** | 117 l/h @ 7 bar |
| **010128** | 128 l/h @ 10 bar | | |
| **010064** | 64 l/h @ 10 bar | | |
| **007508** | 508 l/h @ 7 bar | | |
| **007273** | 273 l/h @ 7 bar | | |
| **007203** | 203 l/h @ 7 bar | | |
| **007101** | 101 l/h @ 7 bar | | |

| MATERIAL pump head + plunger | |
|---|---|
| **D** | PP + CERAMIC (SIALOX 96) |
| **E** | SS (AISI316L) + SS (AISI420) |

| | MOTOR | POWER SUPPLY | PHASE |
|---|---|---|---|
| **1** | 0,18Kw | 220-240/380-420 - 50/60 Hz | 3-PHASE |
| **2** | 0,37Kw | 220-240/380-420 - 50/60 Hz | 3-PHASE |
| **3** | 0,18Kw | 220/380 - 60 Hz | 3-PHASE |
| **4** | 0,37Kw | 220/380 - 60 Hz | 3-PHASE |

| REDUCTION GEAR | |
|---|---|
| **1** | 8:1 |
| **2** | 15:1 |
| **4** | 20:1 |

| O RING | |
|---|---|
| **V** | FKM B |
| **D** | Dutral |
| **W** | WAX |

| LUBRICANT TYPE | |
|---|---|
| **BRAND** | **MODEL** |
| MOBIL | MOBILGEAR 632 |
| SHELL | OMALA OIL 320 |
| BP | ENERGOL GR-XP 320 |
| IP | MELLANA OIL 320 |
| ESSO | SPARTAN EP 320 |
| AGIP | BLASIA 320 |

Fig. 1. PRIUS P pump

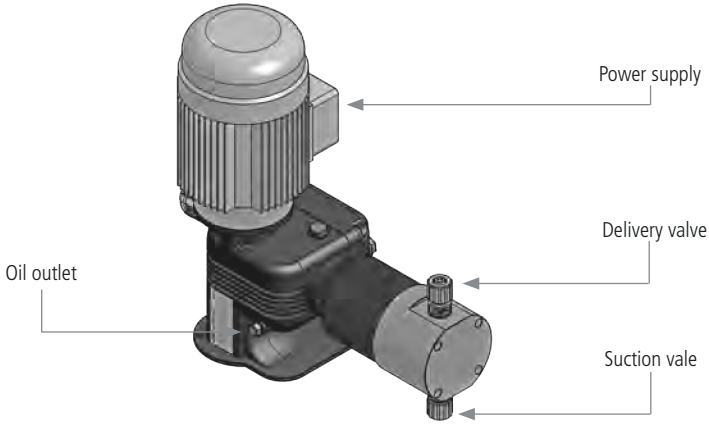


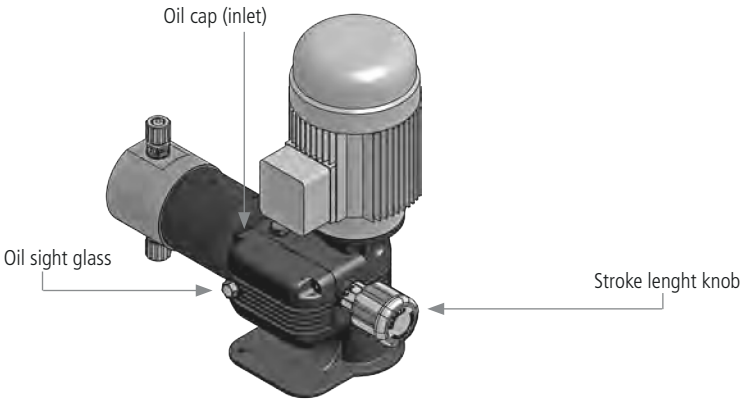

**1.3 Features**

Power supply..... 220-240/380-420 V - 50 Hz 3-PHASE
..... 220/380 V - 60 Hz 3-PHASE

Aluminium enclosure (epoxy coating)
Ceramic (SIALOX96 ) or stainless steel (AISI420) plunger

Environment temperature: -10 ÷ 40°C (14 ÷ 104°F)
Chemical temperature with SS pump head: -10 ÷ 90°C (14 ÷ 194°F)*
Chemical temperature with PP pump head: -10 ÷ 40°C (14 ÷ 104°F)

Installation class .....II
Pollution level .....2
Audible noise.....78 dbA (± 5 dB)
Protection degree.....IP 55
Max suction height.....3 m
Oil capacity.....0,3 lt (Refer to "Lubricant type" table)
Dosing accuracy .....± 5% at rated pressure.

* The specified temperature can be exceeded temporarily (max 15') for sterilization or flushing with hot water.

Tab. 7. Reduction factor for different site altitudes.

| Site altitude above sea level | Site altitude above sea level coolant temperature | | |
|---|---|---|---|
| m | <30 °C | 30 °C … 40 °C | 45 °C |
| 1000 | 1,07 | 1 | 0,96 |
| 1500 | 1,04 | 0,97 | 0,93 |
| 2000 | 1 | 0,94 | 0,9 |
| 2500 | 0,96 | 0,9 | 0,86 |
| 3000 | 0,92 | 0,86 | 0,82 |
| 3500 | 0,88 | 0,82 | 0,79 |
| 4500 | 0,82 | 0,77 | 0,74 |

**1.3.1 PLUNGER**

Prius P plunger pumps.

Material: ceramic (SIALOX96) or Stainless Steel (AISI420)

Lenghts available: 14, 25, 32, 40, 50.

Tab. 8. PRIUS P - PP pump head

| PRIUS P 50 Hz | | | | | | | | |
|---|---|---|---|---|---|---|---|---|
| **stroke length** | **PLUNGER diam. (mm)** | **PRIUS P 50 Hz** | **Stroke/1'** | **Pressure bar** | **Capacity l/h** | **Motor** | **HOSES CONNECTION** | **INSTALLATION KIT** |
| | | | | | | | **PP** | |
| 15 mm | 14 | **010024** | 175 | 10 | 24 | 0,18 kW | G1/2" 12x18 | A |
| | | **010013** | 94 | | 13 | | | |
| | | **010010** | 70 | | 10 | | | |
| | | **010005** | 35 | | 5 | | | |
| | 25 | **010080** | 175 | 10 | 80 | 0,18 kW | G1/2" 12x18 | A |
| | | **010043** | 94 | | 43 | | | |
| | | **010032** | 70 | | 32 | | | |
| | | **010016** | 35 | | 16 | | | |
| | 32 | **010130** | 175 | 10 | 130 | 0,18 kW | G1/2" 12x18 | A |
| | | **010070** | 94 | | 70 | | | |
| | | **010052** | 70 | | 52 | | | |
| | | **010026** | 35 | | 26 | | | |
| | 40 | **010210** | 175 | 10 | 210 | 0,37 kW | G3/4" d.i. 18 mm | B |
| | | **010113** | 94 | | 113 | | | |
| | | **010084** | 70 | | 84 | | | |
| | | **010042** | 35 | | 42 | | | |
| | 50 | **010320** | 175 | 10 | 320 | 0,37 kW | G3/4" d.i. 18 mm | B |
| | | **010172** | 94 | | 172 | | | |
| | | **010128** | 70 | | 128 | | | |
| | | **010064** | 35 | | 64 | | | |

Tab. 9. PRIUS P - SS pump head

| PRIUS P 50 Hz | | | | | | | |
|---|---|---|---|---|---|---|---|
| **stroke length** | **PLUNGER diam. (mm)** | **PRIUS P 50 Hz** | **Stroke/1'** | **Pressure bar** | **Capacity l/h** | **Motor** | **HOSES CONNECTION** |
| | | | | | | | **SS** |
| 15 mm | 14 | **010024** | 175 | 10 | 24 | 0,18 kW | R1/2" |
| | | **010013** | 94 | | 13 | | |
| | | **010010** | 70 | | 10 | | |
| | | **010005** | 35 | | 5 | | |
| | 25 | **010080** | 175 | 10 | 80 | 0,18 kW | R1/2" |
| | | **010043** | 94 | | 43 | | |
| | | **010032** | 70 | | 32 | | |
| | | **010016** | 35 | | 16 | | |
| | 32 | **010130** | 175 | 10 | 130 | 0,18 kW | R1/2" |
| | | **010070** | 94 | | 70 | | |
| | | **010052** | 70 | | 52 | | |
| | | **010026** | 35 | | 26 | | |
| | 40 | **010210** | 175 | 10 | 210 | 0,37 kW | R3/4" |
| | | **010113** | 94 | | 113 | | |
| | | **010084** | 70 | | 84 | | |
| | | **010042** | 35 | | 42 | | |
| | 50 | **010320** | 175 | 10 | 320 | 0,37 kW | R3/4" |
| | | **010172** | 94 | | 172 | | |
| | | **010128** | 70 | | 128 | | |
| | | **010064** | 35 | | 64 | | |
| | 63 | **007508** | 175 | 7 | 508 | 0,55 kW | R1" |
| | | **007273** | 94 | | 273 | 0,37 kW | |
| | | **007203** | 70 | | 203 | | |
| | | **007101** | 35 | | 101 | | |

## PRIUS P WITH PP PUMP HEAD AND CERAMIC PLUNGER
**60 HZ / 3-PHASE MOTOR**

| PRIUS P 60 Hz | | | | | | | | |
|---|---|---|---|---|---|---|---|---|
| stroke length | PLUNGER diam. (mm) | PRIUS P 60 Hz | Stroke/1' | Pressure bar | Capacity l/h | Motor | HOSES CONNECTION PP | INSTALLATION KIT |
| 15 mm | 14 | **010023** | 175 | 10 | 23 | 0,18 kW | G1/2" 12x18 | A |
| | | **010011** | 87 | | 11 | | | |
| | | **010005** | 44 | | 5 | | | |
| | 25 | **010076** | 175 | 10 | 76 | 0,18 kW | G1/2" 12x18 | A |
| | | **010038** | 87 | | 38 | | | |
| | | **010019** | 44 | | 19 | | | |
| | 32 | **010126** | 175 | 10 | 126 | 0,18 kW | G1/2" 12x18 | A |
| | | **010063** | 87 | | 63 | | | |
| | | **010031** | 44 | | 31 | | | |
| | 40 | **010195** | 175 | 10 | 195 | 0,37 kW | G3/4" d.i. 18 mm | B |
| | | **010097** | 87 | | 97 | | | |
| | | **010048** | 44 | | 48 | | | |
| | 50 | **010300** | 175 | 10 | 300 | 0,37 kW | G3/4" d.i. 18 mm | B |
| | | **010150** | 87 | | 150 | | | |
| | | **010075** | 44 | | 75 | | | |

## PRIUS P WITH SS PUMP HEAD AND PLUNGER
**60 HZ / 3-PHASE MOTOR**

| PRIUS P 60 Hz | | | | | | | |
|---|---|---|---|---|---|---|---|
| stroke length | PLUNGER diam. (mm) | PRIUS P 60 Hz | Stroke/1' | Pressure bar | Capacity l/h | Motor | HOSES CONNECTION SS |
| 15 mm | 14 | **010023** | 175 | 10 | 23 | 0,18 kW | R1/2" |
| | | **010011** | 87 | | 11 | | |
| | | **010005** | 44 | | 5 | | |
| | 25 | **010076** | 175 | 10 | 76 | 0,18 kW | R1/2" |
| | | **010038** | 87 | | 38 | | |
| | | **010019** | 44 | | 19 | | |
| | 32 | **010126** | 175 | 10 | 126 | 0,18 kW | R1/2" |
| | | **010063** | 87 | | 63 | | |
| | | **010031** | 44 | | 31 | | |
| | 40 | **010195** | 175 | 10 | 195 | 0,37 kW | R3/4" |
| | | **010097** | 87 | | 97 | | |
| | | **010048** | 44 | | 48 | | |
| | 50 | **010300** | 175 | 10 | 300 | 0,37 kW | R3/4" |
| | | **010150** | 87 | | 150 | | |
| | | **010075** | 44 | | 75 | | |
| | 63 | **007469** | 175 | 7 | 469 | 0,55 kW | R1" |
| | | **007234** | 87 | | 234 | 0,37 kW | |
| | | **007117** | 44 | | 117 | | |

## 2. INSTALLATION

### 2.1 Installation warnings

Before start installation, the operator must be aware of safety precautions to prevent physical injury.

**OPERATOR PROTECTION**

**Use safety equipment according to the company regulations.**
**Use this safety equipment within the work area during installation, service and when handling chemicals:**

- **protective mask**
- **protective gloves**
- **safety goggles**
- **ear plugs or hear muffs**
- **further security device, if necessary.**

**POWER SUPPLY DISCONNECTION**

**Always disconnect power to the motor before you perform any installation or maintenance tasks. Failure to disconnect power will result in serious physical injury.**

**INSTALLATION PUMP GUIDELINES**

Install the pump
- in a safety place and fixed to the table / wall to avoid vibration problems;
- in an easy accessible place;
- in horizontal position.

Use only hoses compatibles with product to dose.

See "8.1 Chemical compatibility table" page 24.
If dosing product is not listed please consult full compatibility table or contact chemical's manufacturer.

## 2.2 Commissioning steps

5 steps of installation procedure:

1. Pump location
2. Oil filling
3. Piping connection
4. Electric wiring
5. Start-up

### 2.2.1 Pump location

Pump must be installed on a flat base at max **3 m** height from tank's bottom.
Fasten the pump by clamping screws.

Injection point must be higher of tank to avoid accidental chemical injection.

Otherwise, connect a **multifunction valve** on delivery pipeline.

### 2.2.2 Oil filling

**Pumps are shipped WITH OIL AND WITH A BLIND CAP.**
**At the job site you must replace the blind cap with the one supplied.**
**KEEP THE BLIND CAP for further shipping.**

Fill the oil reservoir through oil inlet ("Fig. 2. Oil filling").
The required amount of oil is 0,30 lt. For acceptable lubricants see the table below.
Check oil level regularly. Change the oil every 8.000-10.000 operating hours.

**You must never start the pump without oil.**

Tab. 10. Acceptable oil for lubricating

| BRAND | LUBRICANT TYPE |
|---|---|
| MOBIL | MOBILGEAR 632 |
| SHELL | OMALA OIL 320 |
| BP | ENERGOL GR-XP 320 |
| IP | MELLANA OIL 320 |
| ESSO | SPARTAN EP 320 |
| AGIP | BLASIA 320 |

Fig. 2. Oil filling

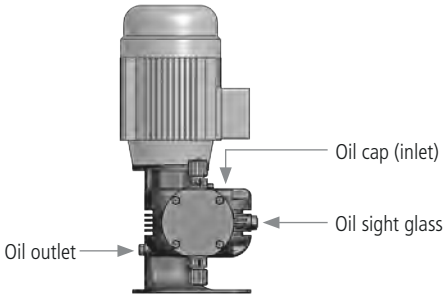

### 2.2.3 Piping connection

**Never operate any pumping system with a blocked suction and discharge. Operation, even for a brief period under these conditions, can cause motor to overheat. You must take all necessary measures to avoid this condition.**

**Suction piping should be as short as possible and installed in vertical position to avoid air bubbles suction.**

**Suction and delivery valves must be installed in vertical position.**

**Hand-tighten the nuts firmly.**
Do not use tongs or any other tool.

**Delivery hose must be firmly fixed to avoid suddenly movements that could damage near objects**

### 2.2.4 Pump head

Pump head priming procedure described in "5. PRIMING" page 20.
PP pump head or SS pump head available.

### 2.2.5 Foot filter

Foot filter is always recommended.
Foot filter should be adequate to suction piping and installed al least 10 cm from the tank bottom.

**2.2.6 Installation drawings**

Fig. 3. Installation drawings

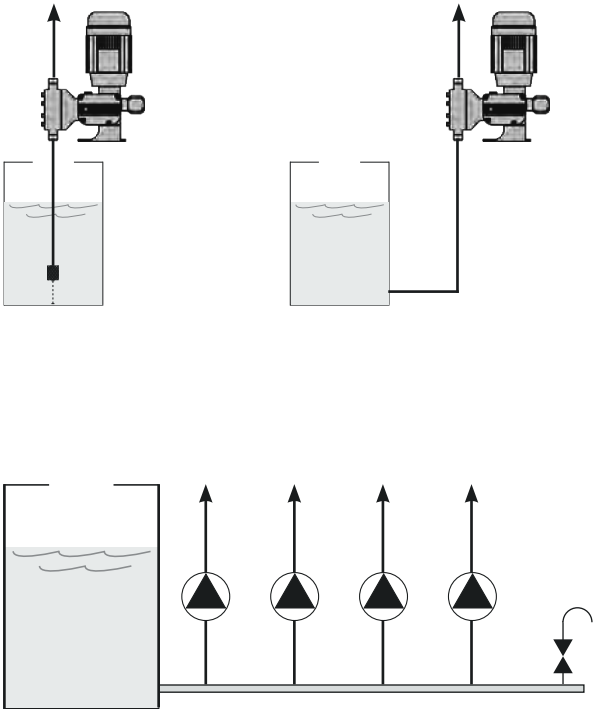

**If the injection valve of the Prius (1 ½ ") is assembled or used in line, do not apply the oring to prevent it from running into the system. Install o-ring only when fitting in to a system which has an o-ring flush.**

## 3. ELECTRICAL WIRING

### 3.1 Preliminary checks

**The electrical wirings should be carried out by AUTHORIZED AND QUALIFIED PERSONNEL only in accordance with local regulations.**

Before to proceed, verify the following steps:

1. **Verify the data on nameplate.**
   Make sure that the electrical data on the nameplate of the motor corresponds to the electrical supply.

2. **Verify the grounded power outlet.**
   The pump must be plugged to a grounded power outlet.

3. **Install a motor protection switch.**
   Pump must be connected to a motor protection switch (Residual Current Circuit Breaker - MCCB).

4. **Verify the cable.**
   Cable type and cross-section must be in accordance to motor data.

5. **Verify the motor rotation.**
   Start up the pump to check the motor's direction of rotation. It must comply with that indicated by the arrow marked on the motor fan cover. If the direction is reversed, rewire the motor power wires in accordance with the wiring diagram, refer to "3.2 Connection diagrams".

### 3.2 Connection diagrams

CONNECTION DIAGRAMS for 3~PHASE MOTOR 50 Hz

"Y" CONNECTION
380-420 Vac

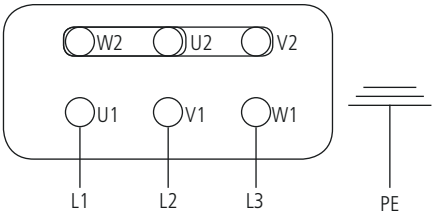


"Δ" (DELTA) CONNECTION
220-240 Vac

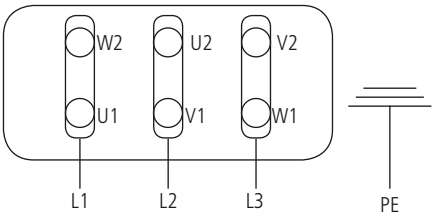

CONNECTION DIAGRAMS for 1~PHASE MOTOR

⚠ MOTOR SUITABLE FOR INSERTIONS WITH RANGE OF AT LEAST 6” INTERVAL

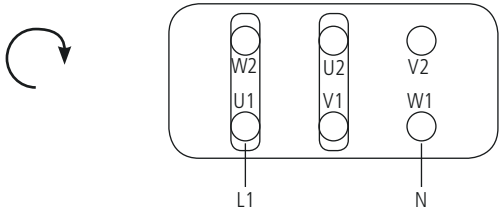


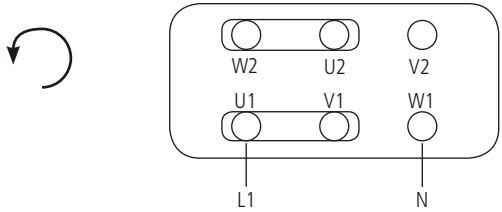

# 4. START UP

## 4.1 Start up

All operation before described must be carried out before starting the pump.

1. Pump location
2. Oil filling
3. Piping connection
4. Electric wiring

Follow the **"GENERAL SAFETY GUIDELINES" PAGE 4**.

1. Start the pump at minimum pressure.
2. Turn the stroke lenght knob on 20%.
3. After 5 minutes, gradually increase the capacity until reaching the prescribed value for the operating condition.

**Control the pressure correspond to the one on the nameplate. If not, stop the pump immediatly.**

If the pump does not start to dose:
a) Stop the pump.
b) Prime the pump head ("5. PRIMING" PAGE 20)
c) Start the pump again.

4. Monitor periodically the pump functioning.

## 5. PRIMING

### 5.1 Warnings

The first time and where use of the pump is suspended for a long period of time, priming may be necessary. It allows suction piping and pump head to fill with liquid before pumping against pressure.

Priming the pump is also recommended when there is air into pump head or into suction pipe.

⚠ **Feeder should be interlocked with a no-flow protection device to automatically shut-off the pumps when there is no flow!**

⚠ **Adequate measures shall be taken to prevent cross connection of chemicals!**

⚠ **Chemical feeding must be stopped during backwash cycles and periods of noflow as these conditions may introduce the potential for chemical overdosing. Not doing so may result in elevated chemical concentrations and hazerdous gas introduction into the pool or spa.**

⚠ **Never operate any pumping system with a blocked suction and discharge. You must take all necessary measures to avoid this condition.**

⚠ **SAFETY EQUIPMENT**
**Use safety equipment according to the company regulations. Use this safety equipment within the work area:**
- **Helmet**
- **Safety goggles (with side shields)**
- **Protective shoes**
- **Protective gloves**
- **Gas mask**

### 5.2 How to prime the pump

1. Connect all pipings (suction, delivery).
2. Rotate stroke lenght knob (pull and rotate) on 100%;
3. Power the pump.
4. Proceed to standard operating condition.

# 6. MAINTENANCE

## 6.1 Maintenance schedule

Before start maitenance, the operator must be aware of safety precautions to prevent physical injury.

**OPERATOR PROTECTION**
**Use safety equipment according to the company regulations.**
**Use this safety equipment within the work area during installation, service and when handling chemicals:**

- **protective mask**
- **protective gloves**
- **safety goggles**
- **ear plugs or hear muffs**
- **further security device, if necessary.**

**POWER SUPPLY DISCONNECTION**
**Always disconnect power to the motor before you perform any installation or maintenance tasks. Failure to disconnect power will result in serious physical injury.**

**Installation and maintenance tasks should be carried out by AUTHORIZED AND QUALIFIED PERSONNEL only in accordance with local regulations.**

**Before starting any maintenance or before long downtimes, drain the chemical from pump head.**

Use original spare parts.

## 6.2 Maintenance inspection

A maintenance schedule includes these types of inspections:

- Routine maintenance and inspections
- Three-month inspections
- Annual inspections

Shorten the inspection intervals appropriately if the pumped chemical is abrasive or corrosive.

### Routine maitenance and inspections

Perform these tasks whenever you perform routine maintenance:

- Inspect the seal. Ensure that there are no leaks from the mechanical seal.
- Check electrical wiring
- Check the level and condition of the oil through the sight glass
- Check for unusual noise and vibration (noise allowed 78 dbA; ± 5 dB).
- Check the pump and piping for leaks.
- Inspect the discharge pressure.
- Check temperature (motor temperature max 70°C; pump head max 40°C)
- Check for corrosion on parts of the pump and / or on hoses.

### Three-month inspections

Perform these tasks every three months:

- Check that the bolts are tight.
- Check the mechanical seal if the pump has been left idle.

### Annual inspections

Perform these inspections one time each year:

- Check the pump capacity (as per nameplate).
- Check the pump pressure (as per nameplate).
- Check the pump power (as per nameplate).
- Change the oil every year (8.000-10.000 operating hours).
- Change the oil more often if there are adverse conditions

If the pump performance does not satisfy your process requirements, and the process requirements have not changed, then perform these steps:

1. Disassemble the pump.
2. Inspect it.
3. Replace worn parts.

---

### 6.3 Shutdown procedure

⚠ **This procedure SHOULD BE CARRIED OUT BY AUTHORIZED AND QUALIFIED PERSONNEL**

⚠ **OPERATOR PROTECTION**

**Use safety equipment according to the company regulations.**
**Use this safety equipment within the work area during installation, service and when handling chemicals:**

- **protective mask**
- **protective gloves**
- **safety goggles**
- **ear plugs or hear muffs**
- **further security device, if necessary.**

Shutdown the dosing pump **before any maintenance operation** or **before long downtimes**.
Disconnect power to the motor and ensure it cannot be restarted.

⚠ **Depressurize the system. The liquid may leak splashing.**

Drain the chemical from pump head.
Release the pressure.
Rinse the pump head and clean all valves.

## 7. TROUBLESHOOTING

Tab. 11. Guide to troubleshooting.

| PROBLEM | CAUSE | REMEDY |
|---|---|---|
| Dosing pump not delivering or output too low | Suction valve leaking or blocked | Clean or replace suction valve |
| | Suction pipe leaking or blocked | Replace suction pipe |
| | Air bubbles into pump head or into suction pipe | Prime the pump as described in "5.1 How to prime the pump" page 20 |
| | Viscosity too high | Increase the pipe diameter or contact manufacturer |
| | Suction lift too high | Decrease lift |
| | Foot filter obstruction | Clean the foot filter |
| Motor and pump head too hot | Wrong wiring or defecting contact | Check wiring |
| | Pressure too high | Install a valve |
| | Delivery pipe obstructed or blocked | Clean delivery pipe |
| | Low level oil | Refill oil |
| Liquid loss | Plunger o-ring damaged | Contact manufacturer for replacement |

If the problem can not be solved, please contact after-sales service or return the dosing pump to the manufacturer.

### 7.1 Repair service

**Before return the dosing pump to the manufacturer Repair service, drain the chemical from pump head and rinse it.**
**If there is the possibility that residual corrosive liquid into pump head could cause damages, declare it on REPAIR FORM.**

**Remove oil and replace operating cap with the blind cap.**

Complete the PRODUCT SERVICE REPAIR FORM and send it with the dosing pump.
Repair service is not accepted if PRODUCT SERVICE REPAIR FORM is missing.

## 8. COMPATIBILITY TABLE

### 8.1 Chemical compatibility table

Metering pumps are widely used to dose chemical fluids and it is important that the most suitable material in contact with fluid is selected for each application. This compatibility table serves as a useful help in this respect. All the informations in this list are verified periodically and believed to be correct on the date of issuance. All the informations in this list are based on manufacturer's data and its own experience but since the resistance of any material depends by several factors this list is supplied only as an initial guide, in no way manufacturer makes warranties of any matter respect to the informations provided in this list.

Tab. 12. Chemical compatibility table.

| Product | Formula | Ceram. | PVDF | PP | PVC | SS 316 | PMMA | Hastel. | PTFE | FPM | EPDM | NBR | PE |
|---|---|---|---|---|---|---|---|---|---|---|---|---|---|
| Acetic Acid, Max 75% | CH3COOH | 2 | 1 | 1 | 1 | 1 | 3 | 1 | 1 | 3 | 1 | 3 | 1 |
| Hydrochloric Acid, Concentrate | HCl | 1 | 1 | 1 | 1 | 3 | 1 | 1 | 1 | 1 | 3 | 3 | 1 |
| Hydrofluoric Acid 40% | H2F2 | 3 | 1 | 3 | 2 | 3 | 3 | 2 | 1 | 1 | 3 | 3 | 1 |
| Phosphoric Acid, 50% | H3PO4 | 1 | 1 | 1 | 1 | 2 | 1 | 1 | 1 | 1 | 1 | 3 | 1 |
| Nitric Acid, 65% | HNO3 | 1 | 1 | 2 | 3 | 2 | 3 | 1 | 1 | 1 | 3 | 3 | 2 |
| Sulphuric Acid, 85% | H2SO4 | 1 | 1 | 1 | 1 | 2 | 3 | 1 | 1 | 1 | 3 | 3 | 1 |
| Sulphuric Acid, 98.5% | H2SO4 | 1 | 1 | 3 | 3 | 3 | 3 | 1 | 1 | 1 | 3 | 3 | 3 |
| Amines | R-NH2 | 1 | 2 | 1 | 3 | 1 | - | 1 | 1 | 3 | 3 | 1 | 1 |
| Sodium Bisulphite | NaHSO3 | 1 | 1 | 1 | 1 | 2 | 1 | 1 | 1 | 1 | 1 | 1 | 1 |
| Sodium Carbonate (Soda) | Na2CO3 | 2 | 1 | 1 | 1 | 1 | 1 | 1 | 1 | 2 | 1 | 1 | 1 |
| Ferric Chloride | FeCl3 | 1 | 1 | 1 | 1 | 3 | 1 | 1 | 1 | 1 | 1 | 1 | 1 |
| Calcium Hydroxide (Slaked Lime) | Ca(OH)2 | 1 | 1 | 1 | 1 | 1 | 1 | 1 | 1 | 1 | 1 | 1 | 1 |
| Sodium Hydroxide (Caustic Soda) | NaOH | 2 | 3 | 1 | 1 | 1 | 1 | 1 | 1 | 2 | 1 | 2 | 1 |
| Calcium Hypochlor.(Chlor. ted Lime) | Ca(OCl)2 | 1 | 1 | 1 | 1 | 3 | 1 | 1 | 1 | 1 | 1 | 3 | 1 |
| Sodium Hypochlorite, 12.5% | NaOCl + NaCl | 1 | 1 | 2 | 1 | 3 | 1 | 1 | 1 | 1 | 1 | 2 | 3 |
| Potassium Permanganate, 10% | KMnO4 | 1 | 1 | 1 | 1 | 1 | 1 | 1 | 1 | 1 | 1 | 3 | 1 |
| Hydrogen Peroxide, 30% (Perydrol) | H2O2 | 1 | 1 | 1 | 1 | 1 | 3 | 1 | 1 | 1 | 3 | 3 | 1 |
| Aluminium Sulphate | Al2(SO4)3 | 1 | 1 | 1 | 1 | 1 | 1 | 1 | 1 | 1 | 1 | 1 | 1 |
| Copper-II-Sulphate (Roman Vitriol) | CuSO4 | 1 | 1 | 1 | 1 | 1 | 1 | 1 | 1 | 1 | 1 | 1 | 1 |

1 - Good resistance rating

2 - Fairly resistance rating

3- Not resistant

### 8.2 Materials

Polyvinyldene fluoride (PVDF) .....Pump heads, Valves, Fittings
Polypropylene (PP).....Pump heads, Valves, Fittings
PVC .....Pump heads
Stainless steel (SS 316).....Pump heads, Valves
Polymethyl Metacrilate Acrylic (PMMA) .....Pump heads
Ceramic (SIALOX96) or Stainless steel (AISI420).....Plunger
Fluorocarbon (FPM).....O-ring
Ethylene propylene (EPDM).....O-ring
Nitrile (NBR).....O-ring

## 9. DIMENSIONS

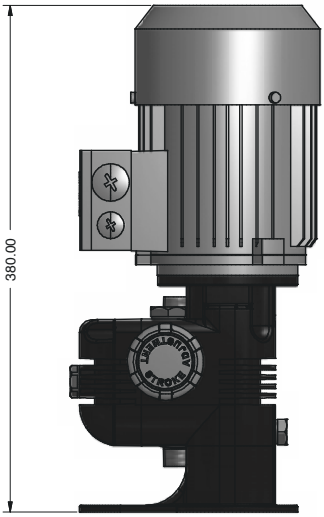


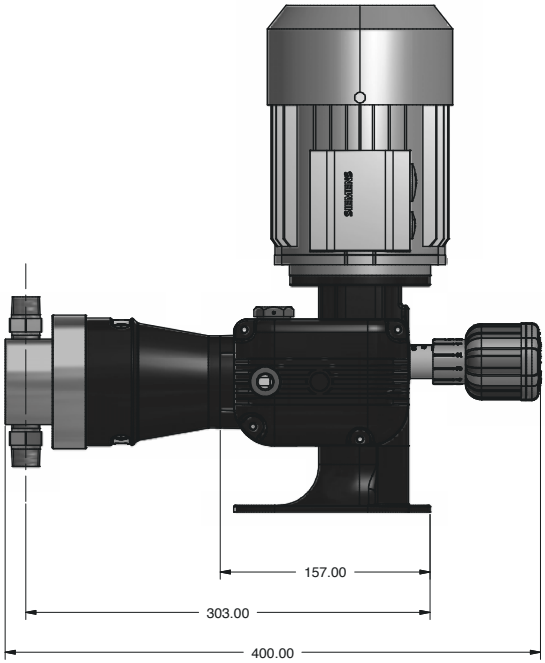


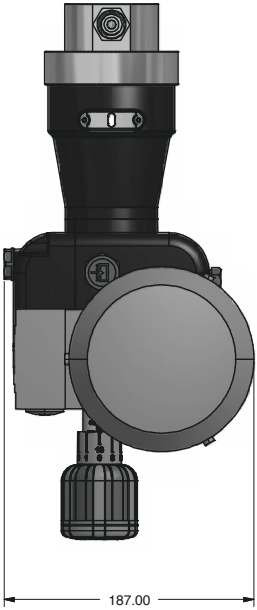

**PRODUCT SERVICE REPAIR FORM**

ENCLOSE THE PRESENT FORM TO THE DELIVERY NOTE

**DATE** .....

**SENDER**

Company name.....

Address .....

Phone no. .....

Contact person.....

**PRODUCT TYPE (see product label)**

DEVICE CODE .....

S/N (serial number).....

**OPERATING CONDITIONS**

Location/installation description .....

.....

Chemical .....

Start-up (date) ..... Running time (approx. hours).....

REMOVE ALL THE LIQUID INTO THE PUMP HEAD AND DRY IT BEFORE PACKAGING IN ITS ORIGINAL BOX.

**DESCRIPTION OF PROBLEM**

☐ MECHANICAL

- Wear parts.....
- Brekage/other damages .....
- Corrosion.....
- Other.....

☐ ELECTRICAL

- Connections, connector, cables .....
- Operating controls (keyboard, display, etc.) .....
- Elettronics.....
- Other.....

☐ LEAKS

- Connections.....
- Pump head .....

☐ NOT OR INADEQUATE FUNCTION/OTHER

.....

.....

.....

**I declare that the dosing pump is free of any hazardous chemical.**

Signature of the compiler

Company stamp

## PRECAUTIONS RELATING TO DIRECTIVES, REGULATIONS AND STANDARDS

### § CE/EU and UKCA marking

We guarantee that this product meets the essential requirements of the applicable Directives and Regulations based on the following specifications. Please carefully consider the following specifications for use of the product in European Union member countries and the United Kingdom.

**• CE/EU harmonized directives and standards**

**Directives**
DIRECTIVE 2006/42/EC
DIRECTIVE 2014/35/EU
DIRECTIVE 2014/30/EU
DIRECTIVE 2011/65/EU
DELEGATED DIRECTIVE (EU) 2015/863

**Harmonized standards**
EN ISO 12100
EN 809
EN ISO 20361
EN IEC 61326-1
EN 61010-1
EN IEC 63000

**• UKCA harmonized regulations and standards**

**Regulations**
2008 No. 1597
2008 2016 No. 1091
2016 No. 1101
2012 No. 3032

**Harmonized standards**
BS EN ISO 12100
BS EN 809
BS EN ISO 20361
BS EN IEC 61326-1
BS EN 61010-1
BS EN IEC 63000

### § Other compliances

Decree 6 April 2004, n. 174 of the Ministry of Health (Gazzetta Ufficiale n. 166 of 17-7-2004)
Decree 7 February 2012, n.25 of the Ministry of Health (Gazzetta Ufficiale n. 166 of 17-7-2004)

**Disposal of end-of-life equipment by users**

This symbol warns you not to dispose of the product with normal waste. Respect human health and the environment by giving the discarded equipment to a designated collection center for the recycling of electronic and electrical equipment. For more information visit the online site.

When dismantling a pump please separate material types and send them according to local recycling disposal requirements. We appreciate your efforts in supporting your local Recycle Environmental Program. Working together we'll form an active union to assure the world's invaluable resources are conserved.