R990525

PRISMA

EN

Modbus RS-485 WiFi

MULTIFUNCTION METERING PUMP

STEPPER MOTOR DRIVEN

NIMBUS

REMOTE CONTROL AND SETUP
https://www.e-nimbus.com

R131124

TABLE OF CONTENTS

GENERAL SAFETY GUIDELINES 3
PURPOSE OF USE AND SAFETY 4
ENVIRONMENTAL SAFETY 5
LABEL 5
SPARE PARTS 5

1. DESCRIPTION.....7
1.1 PRISMA Series 7
1.2 Working modes 7
1.3 Functions.....8
1.4 Capacities.....8
1.5 Features 9
1.6 Unpacking.....10
1.7 List of materials 10

2. PRODUCT DESCRIPTION 11
2.1 Control elements 11
2.1 Pump head.....12
2.3 Dimensions.....13

3. INSTALLATION.....15
3.1 How to install metering pump.....15
3.2 User health and safety.....15
3.3 The work area.....15
3.4 Pump location 15
2.5 Requirements for product positioning.....15
3.6 Installation drawings 16

4. PIPING CONNECTIONS 17
4.1 Foot filter / Level probe.....17
4.2 Suction hose connection 18
4.3 Pump head / delivery hose assembling procedure. 18
4.4 Injection valve 19
4.5 Venting hose.....19

5. ELECTRICAL WIRINGS.....20
5.1 Preliminary checks 20

6. CONNECTIONS 21

7. START UP 22
7.1 Start up.....22

8. PRIMING 23
8.1 Precautions.....23
8.2 Priming 23

9. SET UP 24
9.1 Basic principle.....24
9.2 Display icon.....24
9.3 Menu overview.....25
9.4 Pump capacity setting.....33

10. ELECTRICAL WIRING.....35
10.1 Preliminary checks 35
10.2 connection diagrams 35

11. MAINTENANCE 36
11.1 Maintenance schedule..... 36
11.2 Maintenance inspection..... 36
11.3 Shutdown procedure 37
11.4 Display battery replacement procedure 37

12. TROUBLESHOOTING 38
13. GRAPHIC CURVES..... 39
14. NAVIGATION MENU 42

WIFI (OPTION)..... 27

This operating instructions contains safety information that if ignored can endanger life or result in serious injury. Read these instructions **carefully** before use and keep them for future reference. **Information and specifications on this manual could be uncorrect or could have printing errors. Specifications a e subject to change without notice.**

Product Identification Codes
(the "_" symbols complete the product code based on the configuration of the variants)
Codici Identificativi Prodotto
(i simboli "_" completano il codice del prodotto in base alla configurazione delle varianti)

PRA _____
PRI _____
PRS _____
PRW _____

GENERAL SAFETY GUIDELINES

Operating, installing, or maintaining the unit in any way that is not covered in this manual could cause death, serious personal injury, or damage to the equipment.

ICONS

This manual use the following safety message icon:

Warning!
Indicates a hazardous situation which, if not avoided, will result in death or serious injury.

Warning!
Indicates a hazardous situation which, if not avoided, could result in death or serious injury.

Important - A practice not related to personal injury or additional information.

Cross reference - An instance which refers to related information elsewhere in the same document.

AC - Alternating current

Protective earth

DC - Direct current

Stand-by

PURPOSE OF USE AND SAFETY

METERING PUMP IS INTENDED FOR CHEMICAL DOSING AND DRINKING WATER TREATMENT.

Do not use in explosive area (EX).
Do not use with flammable chemicals.
Do not use with radioactive chemicals.

Use after a proper installation.

Use the pump in accordance with the data and specifications printed on the label.

Do not modify or use in a manner inconsistent with the provisions of the operating manual.

Keep the pump protected from sun and water. Avoid water splashes.

In emergencies the pump should be switched off immediately. Disconnect the power cable from the power supply.

When using pump with aggressive chemicals observe the regulations concerning the transport and storage of aggressive fluid .

When installing always observe national regulations.

Manufacturer is not liable for any unauthorized use or misuse of this product that may cause injury, damage to persons or materials.

Pump must be accessible at all times for both operating and servicing. Access must not be obstructed in any way.

Never operate any pumping system with a blocked suction and discharge.
You must take all necessary measures to avoid this condition.

Feeder should be interlocked with a no-flow protection device to automatically shut-off the pumps when there is no flow

Adequate measures shall be taken to prevent cross connection of chemicals!

Chemical feeding must be stopped during backwash cycles and periods of no-flow as these conditions may introduce the potential for chemical overdosing. Not doing so may result in elevated chemical concentrations and hazardous gas introduction into the pool or spa.

Pump and accessories must be serviced and repaired by qualified and authorized personnel only.

Before any operation:
- **always read chemical Material Safety Data Sheet (MSDS);**
- **always wear protective clothing;**
- **always discharge the liquid end before servicing the pump.**
- **empty and rinse the liquid end before work on a pump which has been used with hazardous or unknown chemicals.**

This equipment requires regular maintenance to ensure potability requirements of the water and maintenance of improvements as declared by the manufacturer.

ENVIRONMENTAL SAFETY

Work area

Always keep the pump area clean to avoid and/or discover emissions.

Recycling guidelines

EWC code: 16 02 14

Always recycle according to these guidelines:
1. If the unit or parts are accepted by an authorized recycling company, then follow local recycling laws and regulations.
2. If the unit or parts are not accepted by an authorized recycling company, then return them to the nearest representative.

Waste and emissions regulations

Observe these safety regulations regarding waste and emissions:
- Dispose appropriately of all waste.
- Handle and dispose of the dosed chemical in compliance with applicable environmental regulations.
- Clean up all spills in accordance with safety and environmental procedures.
- Report all environmental emissions to the appropriate authorities.

LABEL

Fig. 1. Product label.

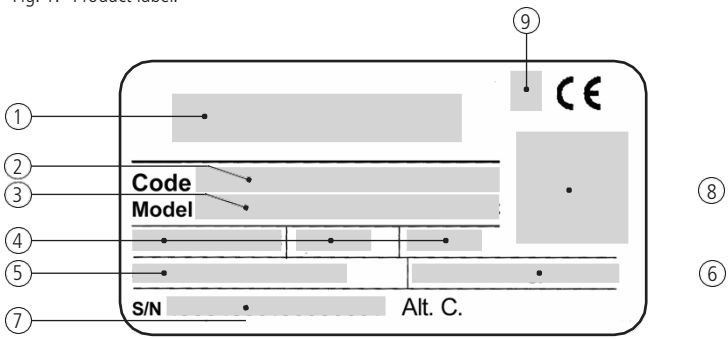

No.	DESCRIPTION
1	Distributor
2	Code
3	Model
4	Voltage supply/frequency - Ampere - protection class
5	Maximum pressure
6	Maximum capacity
7	Serial number
8	Data matrix
9	UL conformity (if any)

Spare parts

For spare parts orders or any other communication, refer to product label.
Code (CODE) and serial number (S / N) uniquely identify the pump.

Transportation and storage

A not suitable transportation or storage can cause damages.

Use original box to pack the pump.

Observe storage conditions also for transportation.

Although packed, always protect the unit against humidity and the action of chemicals.

Before return the dosing pump to the manufacturer Repair service, drain the chemical from pump head and rinse it. Refer to **Shutdown procedure.**

Fill the PRODUCT SERVICE REPAIR FORM and send it with the dosing pump.
Repair service is not accepted if PRODUCT SERVICE REPAIR FORM is missing.

DO NOT TRASH PACKAGING. USE IT TO RETURN THE PUMP.

Transportation and storage temperature .....10 / 50°C (32 / 122°F)
Humidity.....95% relative humidity (not condensed)

1. DESCRIPTION

1.1 PRISMA Series

PRISMA stepper motor-driven diaphragm dosing pump, mechanical actuated, provides functionalities. Microprocessor-controlled stepper motor ensures a completely homogeneous dosing process.
The position and the speed of the diaphragm is controlled by the microprocessor electronics during the entire discharge/suction cycle.
The slow mode enables reduction of the suction speed. Thereby, viscous liquids can be dosed more easily and more accurate dosing. When slow motion mode is activated, the maximum delivery rate of the dosing pump is reduced.
Depending on the application, in the dosing range you can use various materials and connections to the pressure and suction side.
Accessory sets are available to ensure the best outcomes and quick installation.

- Spring return mechanism
- Manual degassing valve (PVDF and PP pump heads)
- Flow regulation
- Double ball check valve
- STAND-BY input
- LEVEL (level control) input
- ALARM contact output.
- MODBUS / WIFI options on demand

Some functions described into this manual may need accessories not included into the pump packaging.

MULTIFUNCTION STEPPER MOTOR-DRIVEN DOSING PUMP
TURNDOWN RATIO 1:4800*
SLOW SUCTION MODES (x4) for viscous media
COLOR STATUS DISPLAY
ALARM INDICATION ON DISPLAY
LIQUID ENDS AVAILABLE IN DIFFERENT SIZES AND MATERIALS
DOUBLE BALL CHECK VALVE
CAPACITY RANGE 5 – 80 l/h, UP TO 20 bar

* PRISMA STEPPER MOTOR-DRIVEN PUMPS GIVE YOU THE MOST ACCURATE CONTROL OVER THE STEP SPEED, PROVIDING AN OUTSTANDING TURNDOWN RATIO OF UP TO 4800:1. IT MEANS PRISMA CAN SPLIT UP THE DOSING PROCESS INTO A MAXIMUM OF 4800 STEPS IN ORDER TO OFFER THE MOST HOMOGENEOUS AND PRECISE DISTRIBUTION OF THE PRODUCT TO DOSE ACCORDING TO THE REQUIRED APPLICATION.

1.2 Working modes

Pump can work in different ways:

MODE	WORKING MODES
CONSTANT	Pump doses at a constant rate set in “LPH” (liters per hour), during setup session.
CC PER PULSE	The pump doses the quantity of product set for each impulse received.
PPM	Dosing rate is determined by pulses from a water meter on the base of set PPM, chemical product concentration (%) and quantity for each single step set during program session.
PERCENTAGE	Dosing rate is determined by pulses from a water meter on the base of set PERC (%), chemical product concentration (%) and quantity for each single step set during program session.
MLQ	Dosing rate is determined by pulses from a water meter on the base of set MLQ (milliliters per quintal), chemical product concentration (%) and quantity for each single step set during program session.
BATCH	Signal from an external contact starts the pump to dose the set quantity.
VOLT	Voltage from an external device drives the pump that doses proportionally using a minimum and maximum of steps for minute set during program session (0–10 VDC).
mA	Current from an external device drives the pump that doses proportionally using a minimum and maximum of steps for minute set during program session.
PULSE	Pump doses proportionally between the low and high p/m values. This mode is used with controllers provided of an impulsive output.
PAUSE-WORK	Pump doses the set quantity during working time.
WEEKLY PROGRAMMING	This mode is used for weekly program pump dosing activity.

Regardless of the above selected working mode, EXT CONSTANT start/stop the pump by means of the “external constant” contact (INPUT plug).

EXT CONSTANT	This operating mode is enabled in STAND-BY menu (EXTERNAL INPUT). An external signal starts constant dosing of a certain amount per hour (QUANTITY) at the set speed. In this case, the working mode displayed is EXT CONSTANT. Contact can be set N.O. or N.C

1.3 Functions

FUNCTION	ICON	DESCRIPTON
SLOWMODE	100% ...% ...% 30%	Slow motion mode enables reduction of the suction speed. Thereby, viscous liquids can be dosed more easily and more accurate dosing. When slow motion mode is reduced (from 100% to 30%, 1unit step), the maximum delivery rate of the dosing pump is reduced. To enable Slow Mode: ADVANCED / MORE / Pump capacity / Slow mode
COLOR STATUS DISPLAY	green display	pump is running
	white display	stand-by mode
	yellow display	warning condition
	red display	alarm condition
TURNDOWN RATIO	/	Based on the 4800 motor-step (minimum) for each dosage provides homogeneous and precise liters per hour distribution of the chemical. Ratio changes according to pump’s capacity l/h. Minimum value for cc/pulse mode is 0,0001 ml/⊓ signal
DELIVERY SPEED CONTROL		Delivery speed control based on pump capacity set.

1.4 Capacities

MODEL	2001	2502	2005	1013	0720	0528	0450	0280	0370	167,5
Flow (l/h)	1	2	5	13	20	28	50	80	70	7,5
Pressure (max bar)	20	25	20	10	7	5	4	2	3	16
Pump Head (Model)	I	L	L	M	N	N	N	N	N	L
Pump Head (Material)	PVDF, PP, SS (AISI 316), Acrylic Glass (PMMA)									
Membrane	PTFE									
O-Ring	FKM B, EPDM, Nitril, PTFE									
Liquid-ends (S/D) mm	4x6 / 4x6			6x8 / 6x8	8x12 / 8x10					4x6 / 4x6
Pump Head	3/8"				1/2"					3/8"
Injection	1/2"						3/4"		1/2"	

1.5 Features

ELECTRICAL	
Power supply	100-240 Vac - 50/60 Hz / 9-36VDC* *see pump's label
Power consumption	30 W
Alarm output	free contact
TURN DOWN RATIO	1:4800

MATERIALS	
Diaphragm	PTFE
Case	NOVABLEND PC/ABS T110 FR
Pump head (available)	PVDF Stainless Steel (AISI 316L) PMMA PP+FV

MECHANICAL	
Spring return mechanism	
Degassing valve	Manual on PVDF and PP pump heads
Double ball check valve	
Flow regulation	

Environment temperature	10-45 °C / 55-113 °F
Chemical temperature	0-50 °C/ 32-122 °F
Installation class	II
Protection degree	IP 65 (% working RU: 85% T<=40°C; 70% T=50°C - without condensing water)
Max suction height	1,5 m
Dosing accuracy	± 2% at the rated pressure

1.6 Unpacking

QUANTITY	STANDARD PACK	PRISMA (PVDF)	PRISMA (PP/PVC)	PRISMA (SS)
n. 4	ø6 wall-plug	●	●	●
n. 4	4,5 x 40 self tapping screws	●	●	●
n. 1	5 X 20 delayed fuse	●	●	●
n. 1	level probe with axial foot filter (PVDF)	●	●	
n. 1	0,3 bar injection valve (PVDF)	● 1/2"	● 1/2"	● 3/4" STAINLESS STEEL
m 2	delivery hose [1]	● PVDF	● PVDF	● PE
m 2	suction hose [1]	● PVC	● PE	● PVC
m 2	venting hose	● PVC	● PE	
m 0,3	hose / syringe			● PVC
m 2,5	external signal cable	●	●	●
m 2	stand-by/alarm cable	●	●	●
n.1	operating manual	●	●	●

[1] If hose is 6x8 there is only a 4meters long hose. Cut to obtain suction and delivery hoses.

1.7 List of materials

✓ : standard
✗: option available

	PVDF	PP	PPV0	PMMA	PVC	PE	CE	GLASS	PTFE	SS	FKM B	EPDM	WAX	SI
PUMP HEAD	✓	✗								✗				
DIAPHRAGM									✓					
BALLS							✓	✗	✗	✗				
SUCTION HOSE	✗				✓									
DELIVERY HOSE	✓				✗									
VENTING HOSE	✗				✓									
O RING									✗		✓	✗	✗	✗
LEVEL PROBE/ FOOT FILTER	✓													
LEVEL PROBE CABLE						✓								

DO NOT TRASH PACKAGING.
IT CAN BE USED TO RETURN THE PUMP.

2. PUMP'S DESCRIPTION

2.1 Control elements

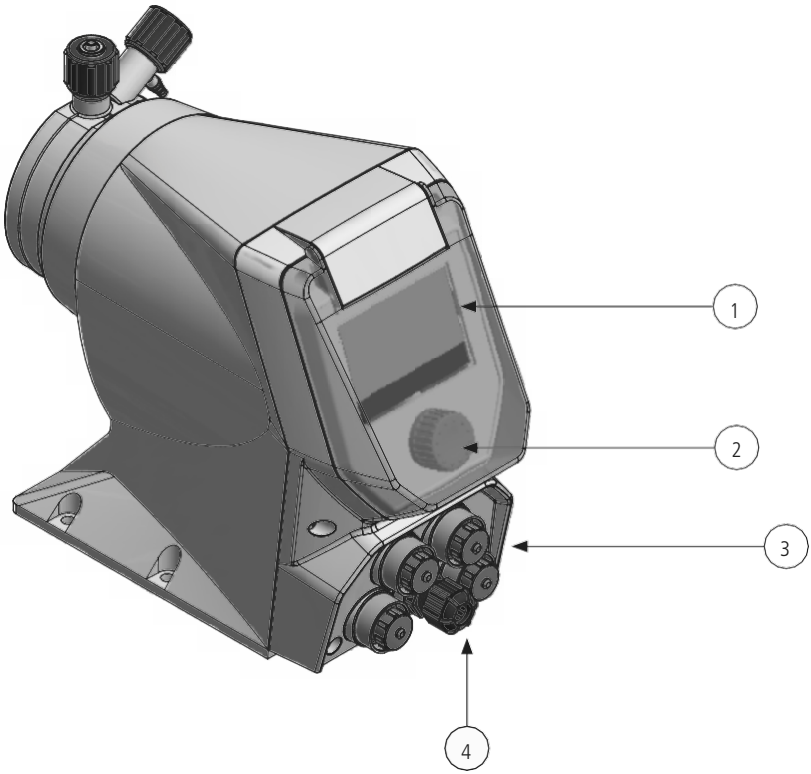

Control elements

No.	DESCRIPTION
1	Multicolor backlight display to indicate pump status: GREEN: pump running WHITE: stand-by YELLOW: warning condition RED: alarm condition
2	Multifunction encoder
3	CONNECTORS: RS485 ALARM INPUT LEVEL
4	Main cable for power supply

2.1 Pump head

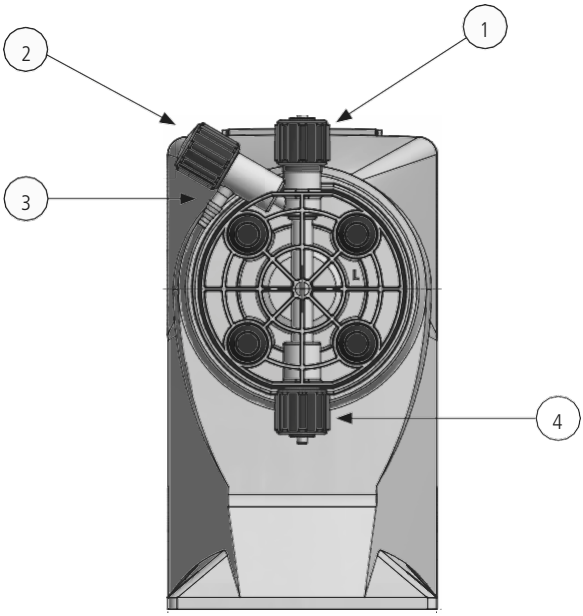

Control elements

No.	DESCRIPTION
1	delivery connection
2	venting knob (not in Stainless Steel pump head)
3	venting connection (not in Stainless Steel pump head)
4	suction connection

2.3 Dimensions Fig. 2. Pump dimension - pump head mod. L

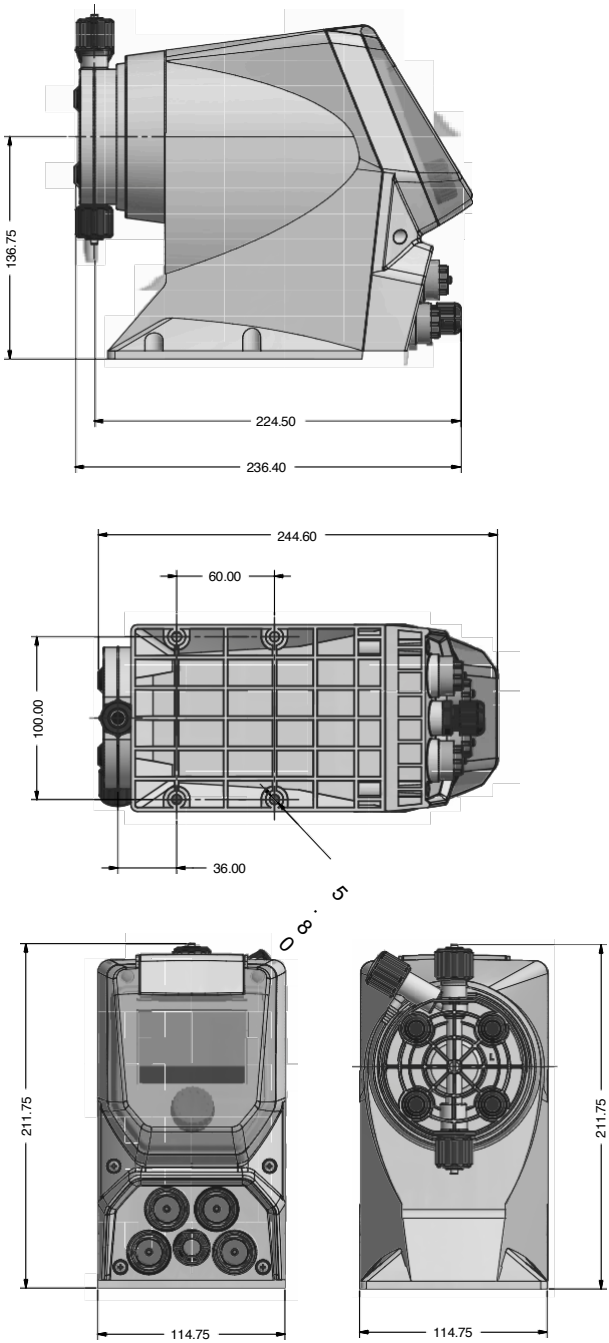

Fig. 3. Pump dimension - pump head mod. N

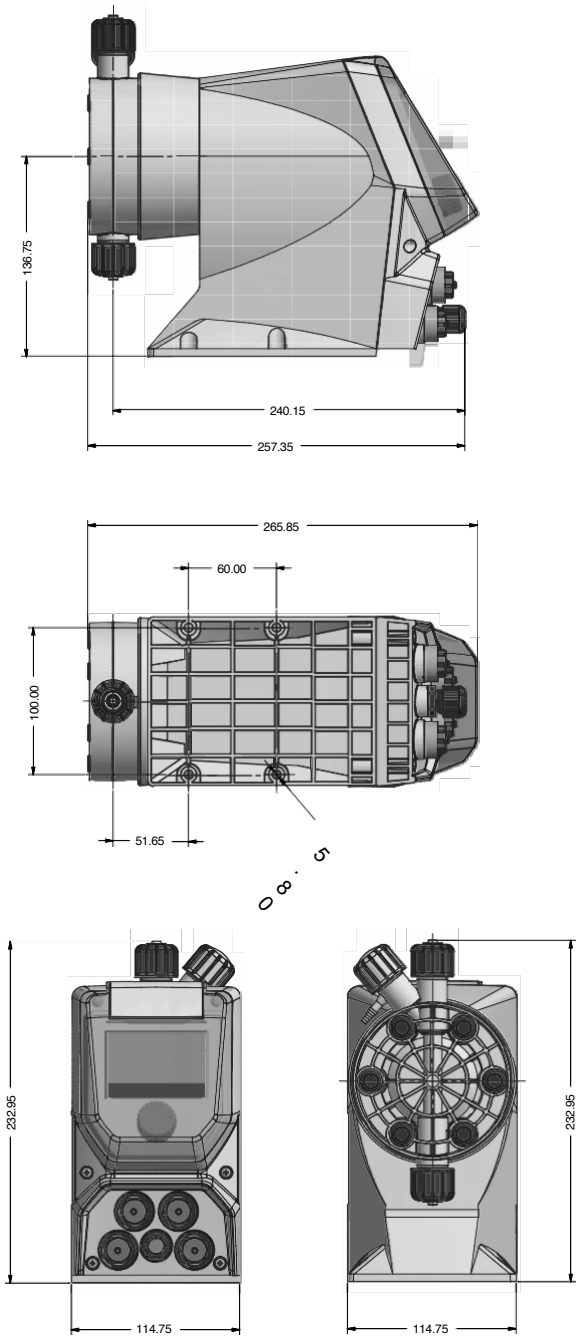

3. INSTALLATION

3.1 How to install metering pump

5 steps to install and start-up the pump:

1. Pump location
2. Piping connections (hoses, level probe, injection valve)
3. Wirings
4. Pump priming
5. Programming and start-up

The operator must be aware of safety precautions to prevent physical injury.

3.2 User health and safety

POWER SUPPLY DISCONNECTION
Disconnect power supply before you perform any installation or maintenance tasks. Failure to disconnect power will result in serious physical injury.

SAFETY EQUIPMENT
Use safety equipment according to the company regulations. Use this safety equipment within the work area:
- **Helmet**
- **Safety goggles (with side shields)**
- **Protective shoes**
- **Protective gloves**
- **Gas mask**

3.3 The work area

INSTALLATION AREA
Observe these regulations and warnings in the work area:
- **Always keep the work area clean.**
- **Pay attention to the risks presented by gas and vapors in the work area.**
- **Avoid all electrical dangers. Pay attention to the risks of electric shock or arc flash hazards.**
- **Avoid water splashes and direct sun!**

3.4 Pump location

Pump must be installed on a stable support at a max **1,5 mt** height from tank's bottom.

Injection point must be higher than tank to avoid accidental chemical injection.

Otherwise, connect a **multifunction valve** on delivery pipeline.

INSTALLATION PUMP GUIDELINES
Install the pump
- in a safety place and fixed to the table / wall to avoid vibration problems;
- in an easily accessible place;
- in horizontal position.

Use only hoses compatibles with product to dose.
See "Chemical compatibility table".
If dosing product is not listed, please consult full compatibility table or contact chemical's manufacturer.

3.5 Requirements for product positioning

REQUIREMENTS FOR PRODUCT POSITIONING
Only use fasteners of the proper size and material.
Replace all corroded fasteners.
Make sure that all fasteners are properly tightened and that there are no missing fasteners.

3.6 Installation drawing

Fig. 4. Installation drawing

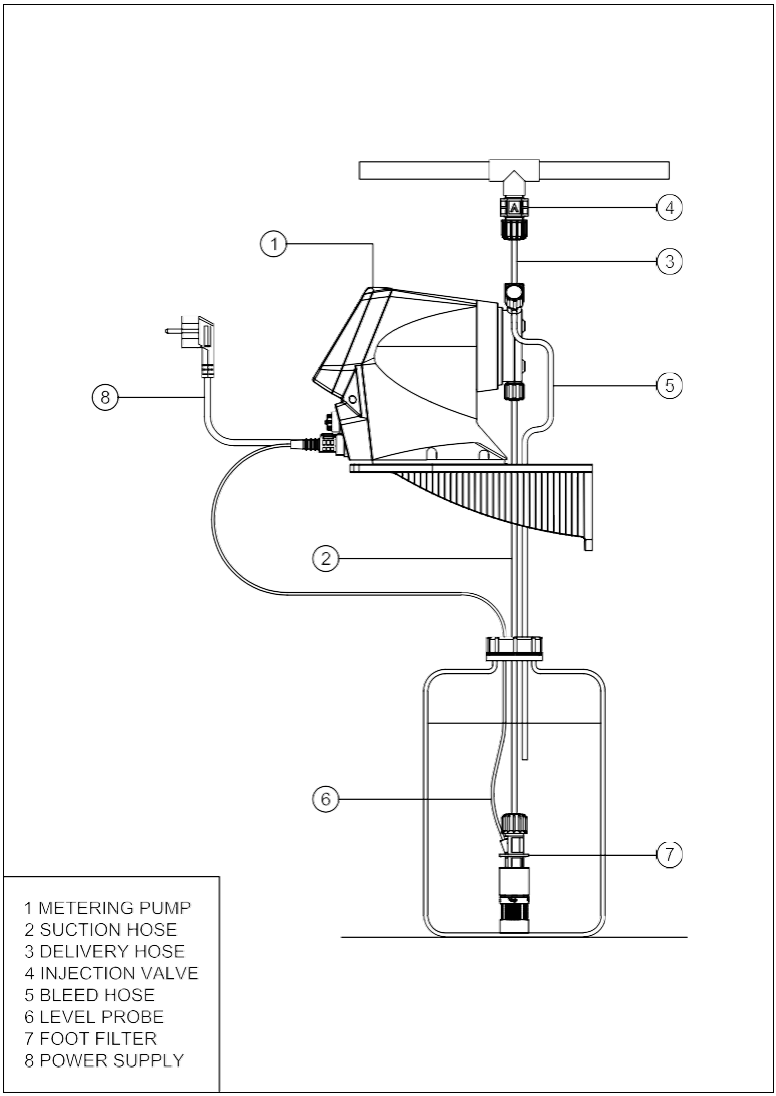

4. PIPING CONNECTIONS

4.1 Foot filter / Level probe

Level probe is assembled with a foot filter that avoid sediments priming problems.
Install level probe on the bottom of the tank.
Connect level probe to the pump.

Warning: If there is a mixer installed into tank, install a suction lance instead of level probe / foot filter.

In case of replacement of level probe parts, follow the diagram below.

Fig. 5. Level probe assembling diagram.

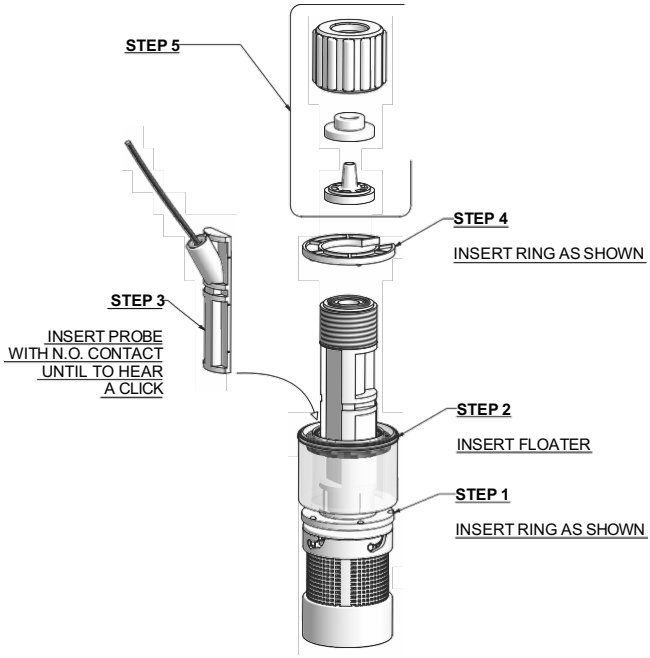

4.2 Suction hose connection

Suction piping should be as short as possible and installed in vertical position to avoid air bubbles suction.

Completely unscrew tightening nut from pump's head and remove assembling components: tightening nut, holding ring and pipe holder.
Assembly as shown in fig.
Insert hose into pipe holder until it reaches the bottom.
Lock hose on pump's head by screwing down the tightening nut.

Hand-tighten the nuts firmly.
Do not use tongs or any other tool.

Fig. 6. Suction hose assembling

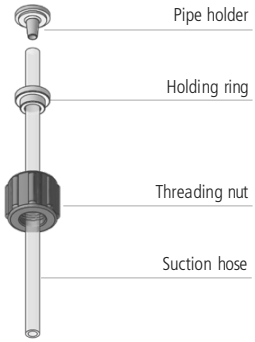

4.3 Pump head / Delivery hose assembling procedure

Suction and delivery valves must be in vertical position.

Delivery hose must be firmly fixed to avoid suddenly movements that could damage near objects

Completely unscrew tightening nut from pump's head and remove assembling components: tightening nut, holding ring and pipe holder.
Assembly as shown in fig.
Insert hose into pipe holder until it reaches the bottom.
Lock hose on pump's head by screwing down the tightening nut.

Hand-tighten the nuts firmly.
Do not use tongs or any other tool.
Connect the other end of the hose to the injection valve using the same procedure.

Fig. 7. Delivery hose / pump head assembling

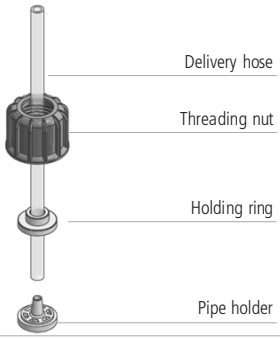

4.4 Injection valve

Injection valve must be installed on plant.
Injection valve will open at pressure greater than 0,3 bar.
On request 1, 2, 3, 4 or 5 bar injection valves are available.

4.5 Venting hose

Insert one side of venting hose into discharge connector as shown in fig 8.

Insert other side of venting hose into product's tank.
During priming procedure product exceeding will flow into tank.

Fig. 8. Manual venting pump head model (NOT STAINLESS-STEEL PUMP HEAD).

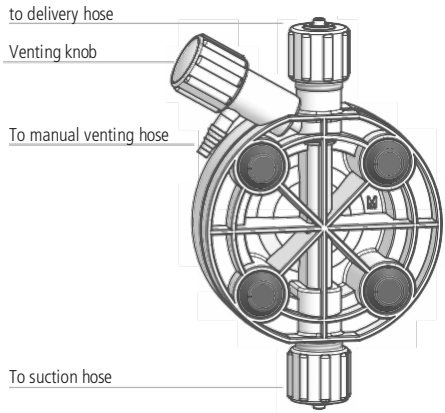

Flow direction is indicated by the arrow on the valves.

For priming procedure see **PRIMING**.

it's allowed to lightly bend venting hose.

During calibration procedure ("TEST"), with a auto-purge pump head, insert venting hose into the graduated cylinder.

5. ELECTRICAL WIRINGS

5.1 Preliminary checks

THE ELECTRICAL WIRINGS SHOULD BE CARRIED OUT BY AUTHORIZED AND QUALIFIED PERSONNEL ONLY IN ACCORDANCE WITH LOCAL REGULATIONS.

Before to proceed, verify the following steps:

1. **Verify the data on rating plate.**
   Make sure that the electrical data on the rating plate corresponds to the electrical supply.

Damage due to incorrect mains voltage!
The dosing pump can be damaged if you connect it to the wrong mains voltage.

2. **Install a relay switch. Do not install it in parallel with heavy inductance load (for example: engines).**
3. **Verify peak Amps. Pumps do not use motor overload protection.**

6. CONNECTIONS

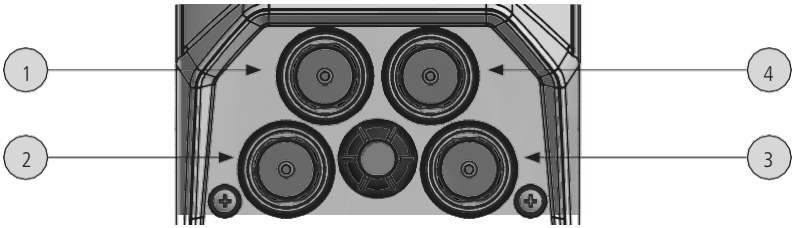

For the connection of cables from previous versions (grey color), please contact Technical Support.

No.		Description	Cable Color	Assignments
1	One 5 poles connector version	RS485 MODBUS	1 Green	- RS485
			2 White	+ RS485
			3 Brown	GND
		mA	4 Blue	+mA
			5 Yellow	-mA

No.	M12x1	Description	Cable Color	Assignments
1		RS485 or MODBUS (option)	1 Yellow	+ RS485
			2 Green	- RS485
			3 Blue	gnd

1		mA Output (option) see page 35	1 Yellow	mA Output (Signal)
			3 Blue	gnd

No.		Description	Cable Color	Assignments
2		STAND-BY	4 White	+ stand-by
			3 Brown	- gnd
		INPUT [1]	2 Blue	+ input (Max 120hz freq.)
			3 Brown	- gnd
			1 [Yellow] - if pulse sender water meter with Hall effect	+ 12 V
		EXT CONSTANT	5 Green	+ Ext const
			3 Brown	- gnd

[1] This iput may be used as:
- pulse sender water meter
- pulse sender water meter with Hall effect
- startup contact for “BATCH” mode
- voltage input for “VOLT” mode
- current input for “mA” mode
- pulse input

No.		Description	Cable	Assignments
3		LEVEL	to probe level (1 yellow, 2 blue)	/

No.		Description	Cable Color	Assignments
4		ALARM free contact	3 White	n.o.
			1 Yellow	n.c.
			2 Green	common

7. START UP

7.1 Start up

All operation before described must be carried out before starting the pump.

1. Pump location
2. Piping connection
3. Connections (power supply, stand-by/input, level, alarm output)
4. Set up
5.

The pump could take up few seconds before start. It depends on motor ramp up to full speed.

Control the pressure correspond to the one on the nameplate. If not, stop the pump immediately.

If the pump does not start to dose:
a) Stop the pump.
b) Prime the pump head.
c) Start the pump again.

6. Monitor periodically the pump functioning.

7.2 Test

Use this function to know exactly the pump flow ate with the liquid used.

1. Install the pump on plant taking care to insert the suction tube (complete with bottom filter) into a ml graduated cylinder (1ml = 1cc). For Prisma pumps up to 7.5 l / h, a 250 ml graduated cylinder is recommended.

2. Put the product to be dosed into the graduated cylinder, prime the pump making sure that the pump head is full of product. Check the initial quantity of the product present in the graduated cylinder including the bottom filter.

3. Power up the pump.

4. From the setup / more menu select "TEST" and enter the duration of the test.

5. Press on the "START" icon. The pump will begin to dose the liquid, at the pressure of the canalization.

6. At the end, read the remaining quantity of chemical on the graduated scale. The dosed quantity will be: the initial quantity minus the remaining quantity.

The capacity of the pump is obtained by multiplying the dosed quantity/min x 60 minutes.

E.g. .: Dosed value: 500ml. Test duration time: 60 seconds.
Hourly flow rate of the pump 500x60 = 30.000 ml/h = 30 l/h

Note: in order to optimize the procedure, it is also possible to set the quantity of product to be dosed during the test phase.

8. PRIMING

8.1 Precautions

Feeder should be interlocked with a no-flow protected device to automatically shut-off the pumps when there is no flow

Adequate measures shall be taken to prevent cross connection of chemicals!

Chemical feeding must be stopped during backwash cycles and periods of no flow as these conditions may introduce the potential for chemical overdosing. Not doing so may result in elevated chemical concentrations and hazardous gas introduction into the pool or spa.

Never operate any pumping system with a blocked suction and discharge. You must take all necessary measures to avoid this condition.

SAFETY EQUIPMENT
Use safety equipment according to the company regulations. Use this safety equipment within the work area:
- **Helmet**
- **Safety goggles (with side shields)**
- **Protective shoes**
- **Protective gloves**
- **Gas mask**

8.2 Priming

To prime the pump:

1. perform al piping (delivery, suction and venting hose); open discharge knob
2. choose PRIMING icon on main menu. It could take few seconds before pump starts count down
3. When the chemical starts to flow into discharge hose, close discharge knob.
4. Proceed to standard operating condition.

For viscous liquids, to facilitate priming: insert a 20 cc syringe on venting pipe and suck;
When syringe is almost full close the discharge valve turning the knob.

9. SET UP

9.1 Basic operations

Main adjustment on encoder

Choose a menu	Rotate encoder on the menu items.
Enter into the menu	Press encoder on the menu item, the display will show the options available.
Confirm a selection, save and go back to main screen	Press encoder on icon
Confirm a selection, save and go back to main menu	Press encoder on icon
Enter a value (numeric)	Press encoder on the value, rotate clockwise to increase, counterclockwise to decrease. Press to choose.

9.2 Display icons

To save changes press SAVE icon.

Each session has an automatic timeout after 60 seconds, then HOME screen will be displayed. *Choose language and measurement unit at first power on*. They can be changed in Advanced / More menu.

PRIMING

STATISTICS

SETTINGS

OFF

SAVE / BACK

START

INFO

STOP

RESET

SAVE / MAIN SCREEN

ALARM ALERT / STAND-BY

DELIVERY SPEED

SLOW MODE

9.2.1 Quick mode for frequency adjustment

From main screen, wait until the cursor on the icons disappears.
Press the encoder for about 5 seconds and adjust the pump frequency in active mode.

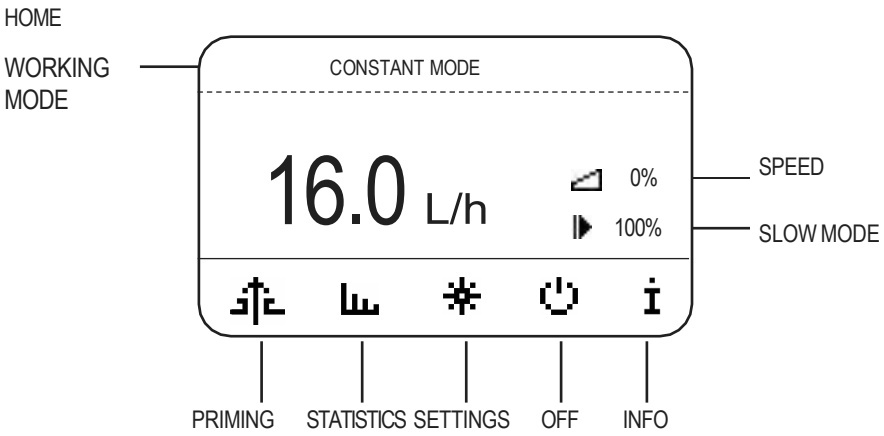

* from menu "VIEW" (full settings) it is possible to set the display between "%" as main unit and "l/h" or "l/h" as main unit and "%" or "%" only.

PRIMING

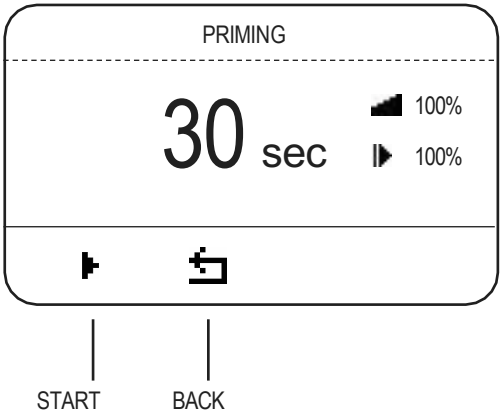

START: to run the PRIMING.

■ Stop button will stop and reset the counter (default value 30 sec).

The pump could wait up to few seconds before starts PRIMING.

Note on user password: to change working settings only a USER password has been created (def.. "0000"). From main menu rotate the encoder counter-clockwise and when no icon is selected press encoder until the user password request appears.

STATISTICS

STATISTICS

> TOTAL

> PARTIAL

> TOTAL

> PARTIAL

TOTAL STATISTICS

DOSED: 10 L
COUNTER: 0 mc

DOSED: total quantity dosed (max 999.999.999 L).
COUNTER: water meter counter (cubic meter of water).

To reset all counters, see LOAD DEFAULT menu:
SETTINGS / ADVANCED / MORE / LOAD DEFAULT.

> TOTAL

> PARTIAL

PARTIAL STATISTICS

DOSED: 10 L
COUNTER: 0 mc
FROM: 19/12/17 23:55
DOSED 24h: 10 L
COUNTER 24h: 0 mc

RESET

DOSED: total quantity dosed (max 999.999.999 L).
COUNTER: water meter counter (cubic meter of water).
FROM: date and hour of last statistic reset.
DOSED 24h: quantity dosed yesterday (00:00 to 23.59 of yesterday).
COUNTER 24h: water meter counter (00:00 to 23.59 of yesterday).
To reset counters press RESET icon.

SETTINGS

Setting session have an automatic timeout after 60 seconds, then go back to HOME screen.

SETTINGS

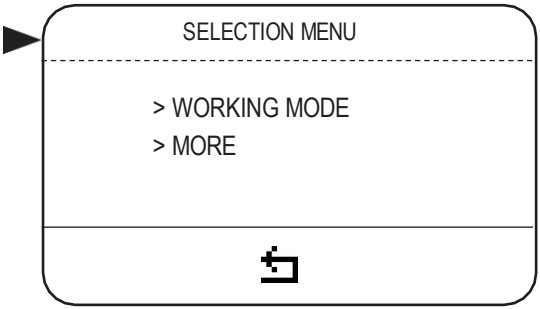

ADVANCED MENU
Use this menu to set working mode and to define all settings.

WIFI SCAN (MORE/COMMUNICATION)

If the WIFI connection module is installed, it is possible to connect the pump to a wireless network in order to connect to the internet and to Nimbus advanced services. It is also possible to update the firmware using the SOFTWARE UPDATE item, if detected. Connection to the WIFI network takes place by selecting the name of the network (SSID) to which you wish to connect from among those detected by the pump (SCAN NETWORK) and entering the password (if required). Requirements: 802.11n (2.4 Ghz Only), WPA/WPA2/WPA3/WPA2-Enterprise and WPS.

DHCP MODE (MORE/COMMUNICATION)

If the WIFI module is installed, it is possible to set the network operating mode from DYNAMIC (mostly used default configuration) to STATIC. With dynamic IP configuration, the pump receives an IP configuration from a Dynamic Host Configuration Protocol (DHCP) server. This server is configured with a pool of available IPs and other settings. Clients contact the server and temporarily borrow an IP address configuration. Use static configuration if requested by your network administrator and manually enter the required parameters (IP, gateway, subnet mask, DNS).

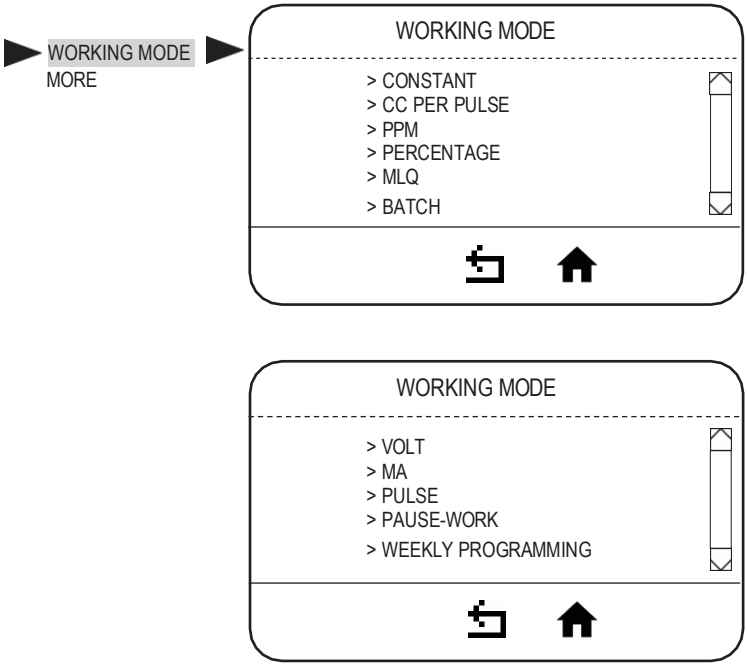

Note: only MLQ - PERCENTAGE - PPM modes affect pulse sender water meter stats.

MODE	PARAMETERS TO SET*		NOTE	WHEN
CONSTANT	L/h: LITERS / HOUR. TURN THE KNOB TO THE REQUIRED LITERS PER HOUR VALUE. THE PUMP WILL INCREASE / DECREASE THE SPEED ACCORDING TO ITS MAXIMUM CAPACITY.		The pump doses at a constant frequency corresponding to a specific number of engine's rotations that can be visualized by the icon .	To dose regularly a standard quantity of chemical (no external signal).
CC PER PULSE*	CC MIN 0,0001 M/L MAX M/L 2X 1 PULSE = M/L SET (see next page)		Dosing rate is determined by pulses from a water meter.	When using an external signal from a pulse sender water meter.
PPM	PPM:1.00 (max 9999.99) CONCENTRATION:10.0%		Dosing rate is determined by pulses from a water meter, PPM, chemical product (%) concentration.	When using an external signal from a pulse sender water meter and it's necessary to specify only PPM (parts per million) and product concentration, leaving the pump to manage coming pulses.
PERCENTAGE	PERCENTAGE:1.00 (max 100.00) CONCENTRATION:10.0%		Dosing rate is determined by pulses from a water meter, percentage (%), chemical product concentration.	When using an external signal from a pulse sender water meter and it's necessary to specify only %, leaving the pump to manage the coming pulses.
MLQ	MLQ:1.00 (max 1000.00) CONCENTRATION:10.0%		Dosing rate is determined by pulses from a water meter on the base of set MLQ (milliliters per quintal), chemical product concentration (%).	When using an external signal from a pulse sender water meter and it's necessary to dose the product quantity set specifying the MLQ (milliliters per quintal) and leaving the pump to manage the coming pulses.
BATCH	EXTERNAL MANUAL	EXTERNAL Quantity: 10.000 L Contact: N.C. (or N.O.)	External mode: signal from an external contact starts the pump to dose the amount product at max frequency.	This mode allows to start dosing after pump receives an external signal.
		MANUAL 10.000 L (Start icon for manual dosing)	Manual mode: to dose a quantity at max frequency (manual start).	This mode allows to start dosing manually.
VOLT	HIGH:10.0 V 60.00 L/H LOW: 0.0 V 0.00 L/H		In Voltage mode, the pump doses proportionally between the low and high voltage values. In VOLT working mode, voltage input value is shown on main menu (top/right).	This mode is used with controllers provided of a proportional output in voltage.

**Only one mode can be set at a time.*

MA	HIGH:20.0 mA 60.00 L/H LOW: 0.0 mA 0.00 L/H		In mA mode, the pump doses proportionally between the low and high mA values. In mA working mode, mA input value is shown on main menu (top/right).	This mode is used with controllers provided of a proportional output in mA.
PULSE	HIGH:180 p/m 60.00 L/H LOW: 0 p/m 0.00 L/H		The pump doses proportionally between the low and high p/m values. In Pulse working mode, pulses number is shown on main menu (top/right).	This mode is used with controllers provided of an impulsive output
PAUSE-WORK	WORKING: 060 min (max 900) PAUSE: 060 min (max 900) QUANTITY: 12.00 L/h 15%		Pump doses the set quantity during working time. Pause-work cycle repeats regularly. Pause-work cycle starts with the working. In Home it will be displayed the quantity counter (top/right) during working session. If settings are incongruent (i.e.: quantity to dose in 60 min is over pump capacity), values are set automatically on max capacity at max frequency. % of capacity is based on Pump Capacity set.	In this mode the pump doses the set quantity during working time.
WEEKLY PROGRAMMING	☑ PROGRAM 1 ☐ … ☐ PROGRAM 24	Start: hh:mm Duration: 00h 00m Quantity: 2,5 l 15% ☑ Sunday ☐ Monday ☐ … ☑ Saturday	Set programs (up to 24). For each program set start time, duration, quantity to dose and days. Pump will dose the quantity starting at the time set. The duration cannot be over the day. Minimum quantity is calculated basing on pump capacity. Do not overlap programs.	This mode is used for weekly program pump dosing activity.

“UPKEEP” functionality. The **“ppm”, “perc” and “mlq”** work modes have an additional configurable functionality called “upkeep” which can be enabled “enable” or disabled “disable”. This function allows to set a “timeout”, countdown between 0 and 24hours, after which if the pump has not yet received a pulse from the pulse-sender water meter, it performs a series of maintenance dosages until the value in ml/h set in the “upkeep dosage” field is finished. “.

"ML SET". Maximum value that can be set: 90% of pump capacity (l/h) divided by 10800 (rpm)

WORKING MODE
MORE

MORE

> PUMP CAPACITY
> TEST
> LEVEL ALARM
> STAND-BY
> EXTERNAL INPUT
> WATER METER

MORE

> TIMEOUT
> OVERFLOW
> UNIT OF MEASURE
> DATA & CLOCK
> LANGUAGE

MORE

> POWER ON DELAY
> PASSWORD
> ALARM OUTPUT
> DISPLAY CONTRAST
> LOAD DEFAULT
> MODBUS *(OPTION)*
> *VIEW*
> *COMMUNICATION*

	PARAMETERS TO SET		NOTE
PUMP CAPACITY	FLOW: 5,000 L/h CC/MIN: 83,333 SLOW MODE: 100%		Pump capacity default setting is based on pump's label. **Slow mode** enables reduction of the suction speed. It can be set from 1 to 100%
TEST	FROM 60 MINUTES TO 1 MINUTE (DEFAULT 6 MINUTES)		Run the test to verify pump capacity (max frequency/speed). See page 22.
LEVEL ALARM	STOP AFTER: 10.0 L CONTACT: N.O.		Level alarm is a pre-alarm on tank level. To delete the alarm, fill the tank. Level alarm set on "0 L" stops the pump. You can set contact N.O. or N.C.
STAND-BY	DISABLED ☐ STAND-BY ☑	CONTACT: N.O.	External signal connected to stand-by input can be: Enabled (STAND-BY) and set on N.O. or N.C.
EXTERNAL INPUT	DISABLED ☐ EXTERNAL INPUT ☑	CONTACT: N.O. QUANTITY: 12.00 l/h 15%	Enabled as EXTERNAL INPUT. An external signal starts constant dosing of a certain amount per hour (QUANTITY) at the speed shown. In this case, the working mode displayed is EXT CONSTANT. Set contact N.O. or N.C.
WATER METER	L/pulse: 1.0 ☑ [gal/pulse: 1.0] ☐		This menu allows to set water meter features. It is possible to enter the amount of pulse/liter or liter/pulse produced by the water meter. This value will determines the dosing rate in PPM / MLQ / PERCENTAGE working modes.
	pulse/L: 1.0 ☐ [pulse/gal: 1.0]		
TIMEOUT	0 - 120 SEC		Maximum time between a pulse and the other within which the pump distributes dosing homogenously. Default value: 10sec. 0 to disable.
OVERFLOW	ALARM WORK		OVERFLOW generates an alarm (displayed in the main menu) that can stop or not the pump. Overflow can occur in PPM or PERCENTAGE or MLQ or BATCH working mode. In PPM or PERCENTAGE or MLQ overflow alarm occurs when dosing rate exceeds pump capacity. In BATCH working mode overflow alarm occurs when pump receives an external signal during dosing.
	ALARM STOP		
UNIT OF MEASURE	LITRES	GALLONS	

DATA & CLOCK	Format: dd/mm/yy 24 Date: Saturday 26/12/15 time: 04:01:19	Format: mm/dd/yy 12 Date: Saturday 12/26/15 time: 04:01:19 am	Changing Data & Clock, partial statistics will be reset.
POWER ON DELAY	00 min		POWER ON DELAY set a delay time at pump's power on. Delay time can be set from 0 to 10 minutes. It is possible to stop delay.
PASSWORD	ADMINISTRATOR PASSWORD New password: 0 _ _ _	> ADMINISTRATOR > USER	Pump default is without password. Insert password: the first time you set administrator password. Once set administrator password, you can choose a user password. Exit from this menu and enter again to set the user password. Reset password with LOAD DEFAULT.
LANGUAGE	IT - EN - FR - DE - ES - PT - RU		Choose language
ALARM OUTPUT	ENABLED ☑ CONTACT N.C.(or N.O.) LEVEL ☐ STAND BY ☐ OVERFLOW ☐ HIGH TEMPERATURE ☑ NO INPUT ☑ HALL SENSOR ☑		ALARM OUTPUT manages the alarm output contact status (N.O. or N.C.): - level: product end; - stand-by: pump stop; - overflow: exceeding the operating frequency in PPM or PERCENTAGE or MLQ or receiving an external signal during dosing in BATCH working mode. - high temperature: pump temp too high - no input: input not detected - hall sensor: the pump engine is locked
DISPLAY CONTRAST	▬		Regulate display contrast to increase display readability.
LOAD DEFAULT	YES	NO	Load default of all values to factory default.

MODBUS (if requested)	ID: 1 BAUDRATE: 9600 FORMAT 8N1 (default)	Set the ID (1 to 255). Set the communication speed: 2400/4800/9600 /19200/38400/115200. Set the format.

9.4 Pump capacity setting

Pump capacity default setting is based on pump's label.

Values set in PUMP CAPACITY menu (ADVANCED / MORE / PUMP CAPACITY) are affecting pump working mode. NOTE: The pump could take up few seconds before starts any operation (PRIMING, run TEST, etc.).

> INFO

ALARMS
RELEASE
M A O U T
RESERVE
INSTANT WM FLOWRATE
iOT Services

To show active alarms navigate to MORE/INFO/ALARMS.

Icon ⚠ on main menu indicates one or more alarms active or stand-by.

Tab. 1. Alarms management

ALARM	PROBLEM	HOW MANAGE
LEVEL	No product	Refill the tank
OVER FLOW	Requested capacity by water meter exceeds maximum pump capacity	Check settings Check pump capacity Set pump OFF then ON.

Tab. 2. Release

Release	It shows pump's software release version
mA OUT	Current output from pump

Tab. 3. Reserve

Reserve	It shows the reserve of product to be dosed as set in the level alarm menu (stop after)

Tab. 4. Instant WM Flow Rate

Instant	It shows how many liters per hours have passed through the pulse sender water meter
iOT Services	View the info needed to connect to the Nimbus server (mac address, QR CODE for pump registration)

10. ELECTRICAL WIRING

10.1 Preliminary checks

The electrical wirings should be carried out by AUTHORIZED AND QUALIFIED PERSONNEL only in accordance with local regulations.

Before to proceed, verify the following steps:

1. **Verify the data on nameplate.**
   Make sure that the electrical data on the nameplate corresponds to the electrical supply.

2. **Verify the grounded power outlet.**
   The pump must be plugged to a grounded power outlet.

3. **Verify the cable.**
   Cable type and cross-section must be in accordance to pump's data.

10.2 mA OUTPUT MODE

mA OUTPUT **(setup menu)**	DISABLED ○ SAME AS INPUT ○ FLOW FUNCTION > ○	- Option is disabled - mA output values are are the same as INPUT - Click to enter into the following menu: HIGH: 999.9 L/H 20.0 mA LOW: 0.0 L/H 0.0 mA Set values according to required output (0-20mA).**Note: HIGH value must be higher than LOW value**

mA OUTPUT CALIBRATION

It is necessary to calibrate the mA output on first power up. To do this while the PRISMA logo is displayed, press and hold the encoder until the screen below appears. Move the cursor on Duty Cycle 4mA, connect the multimeter to the OUTPUT mA and rotate the encoder (percentage value) until the multimeter displays 4mA
Repeat the operation also for 20mA. Press the HOME key to confirm the procedure.

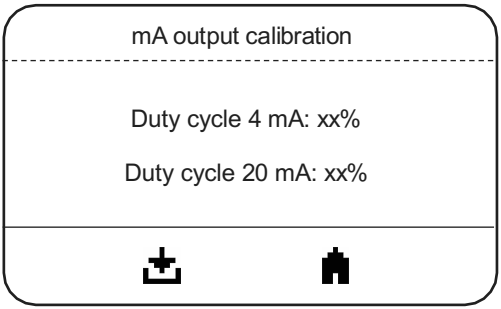

11. MAINTENANCE

11.1 Maintenance schedule

In order to ensure the requirements of potable drinking water treated and the maintenance of the improvements as declared by the manufacturer, this equipment must be checked at least once a month.

OPERATOR PROTECTION
Use safety equipment according to the company regulations.
Use this safety equipment within the work area during installation, service and when handling chemicals:

- **protective mask**
- **protective gloves**
- **safety goggles**
- **ear plugs or hear muffs**
- **further security device, if necessary.**

POWER SUPPLY DISCONNECTION
Always disconnect power before you perform any installation or maintenance tasks. Failure to disconnect power will result in serious physical injury.

Installation and maintenance tasks should be carried out by AUTHORIZED AND QUALIFIED PERSONNEL only in accordance with local regulations.

Use original spare parts.

11.2 Maintenance inspection

Shutdown the dosing pump before any maintenance operation **Shutdown procedure.**

A maintenance schedule includes these types of inspections:

- Routine maintenance and inspections
- Three-month inspections
- Annual inspections

Shorten the inspection intervals appropriately if the pumped chemical is abrasive or corrosive.

Routine maintenance and inspections

Perform these tasks whenever you perform routine maintenance:

- Inspect the seal. Ensure that there are no leaks from the mechanical seal.
- Check electrical wiring
- Check for unusual noise and vibration.
- Check the pump and piping for leaks.
- Check for corrosion on parts of the pump and / or on hoses.

Three-month inspections

Perform these tasks every three months:

- Check for tightening.
- Check the mechanical seal if the pump has been left idle.

Annual inspections

Perform these inspections one time each year:

- Check the pump capacity (as per nameplate).
- Check the pump pressure (as per nameplate).
- Check the pump power (as per nameplate).

If the pump performance does not satisfy your process requirements, and the process requirements have not changed, then perform these steps:
1. Disassemble the pump.
2. Inspect it.
3. Replace worn parts.

11.3 Shutdown procedure

This procedure SHOULD BE CARRIED OUT BY AUTHORIZED AND QUALIFIED PERSONNEL

OPERATOR PROTECTION
Use safety equipment according to the company regulations.
Use this safety equipment within the work area during installation, service and when handling chemicals:
- **protective mask**
- **protective gloves**
- **safety goggles**
- **ear plugs or hear muffs**
- **further security device, if necessary.**

Shutdown the dosing pump **before any maintenance operation** or **before long downtimes**.
Disconnect power and ensure it cannot be restarted.

Depressurize the system. The liquid may leak splashing.

Drain the chemical from pump head.
Release the pressure and disconnect the discharge pipe from the discharge valve.
Rinse the pump head and clean all valves.

11.4 Display battery replacement procedure

POWER SUPPLY DISCONNECTION
Always disconnect power before you perform this procedure. Failure to disconnect power will result in serious physical injury.

This procedure should be carried out by AUTHORIZED AND QUALIFIED PERSONNEL only in accordance with local regulations.

- Disconnect power supply.
- Unscrew the 4 screws under the pump and remove the base.
- Locate the battery slot behind display.
- With a screwdriver push the battery out of its slot.
- Replace with a new one (CR2032 - 3V) respecting polarity (+/-) as shown on the slot.
- Close the base with the 4 screws.

12. TROUBLESHOOTING

Tab. 6. Guide to troubleshooting.

PROBLEM	CAUSE	REMEDY
Dosing pump not delivering or output too low	Suction valve leaking or blocked	Clean or replace suction valve
	Suction pipe leaking or blocked	Replace suction pipe
	Air bubbles into pump head or into suction pipe	Prime the pump as described in “Priming”
	Viscosity too high	Increase the pipe diameter or contact manufacturer
	Suction lift too high	Decrease lift
	Foot filter obstruction	Clean the foot filter
Motor and pump head too hot	Wrong wiring or defecting contact	Check wiring
	Pressure too high	Install a valve
	Delivery pipe obstructed or blocked	Clean delivery pipe
Liquid loss	Diaphragm rupture	Contact manufacturer for diaphragm replacement
Display is lighted but no text appears	Display battery low	Replace display battery. Display battery is located on the circuit board under the display.

If the problem cannot be solved please contact after-sales service

Before return the dosing pump to the manufacturer Repair service, drain the chemical from pump head and rinse it.

12.1 Repair service

If there is the possibility that residual corrosive liquid into pump head could cause damages, declare it on REPAIR FORM.

Fill in the PRODUCT SERVICE REPAIR FORM and send it with the dosing pump.
Repair service is not accepted if PRODUCT SERVICE REPAIR FORM is missing.

13. GRAPHIC CURVES

Flow rate indicated is for H_2O at 20°C at the rated pressure. Dosing accuracy ± 1% at rated pressure.

20 05

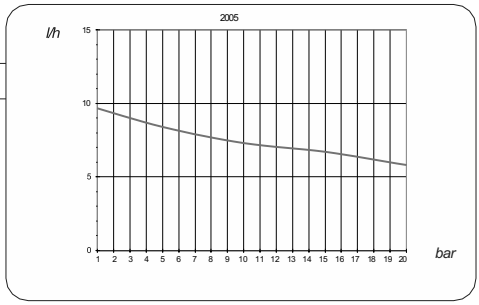

10 13

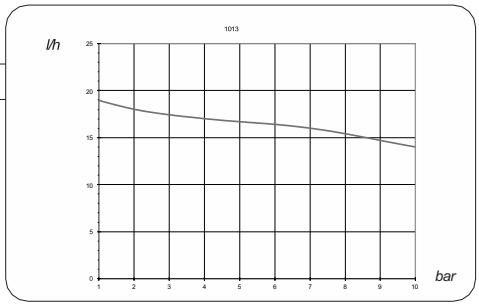

05 28

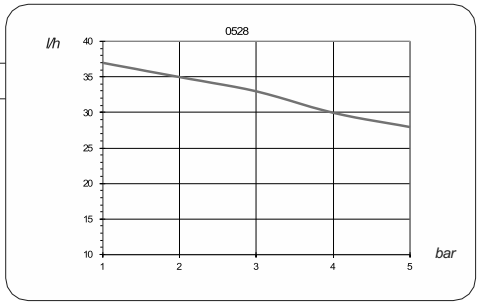

13. GRAPHIC CURVES

02 80

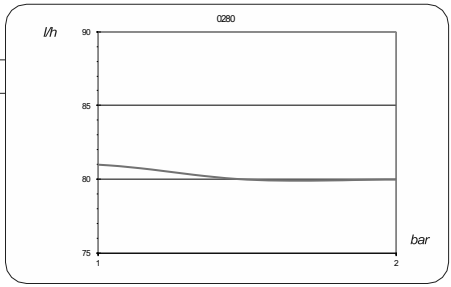

25 02

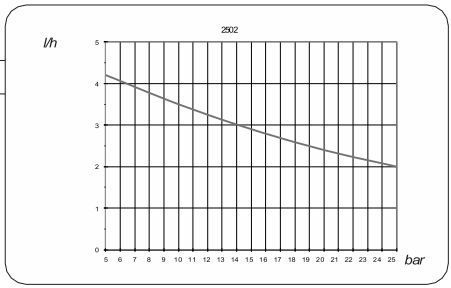

07 20

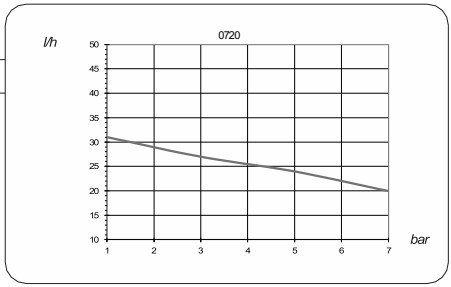

03 70

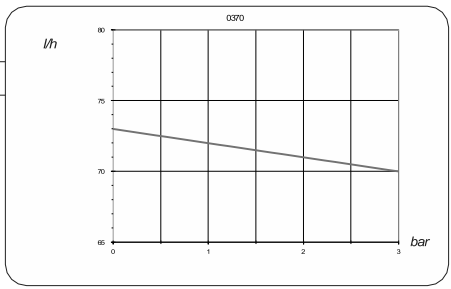

13. GRAPHIC CURVES

04 50

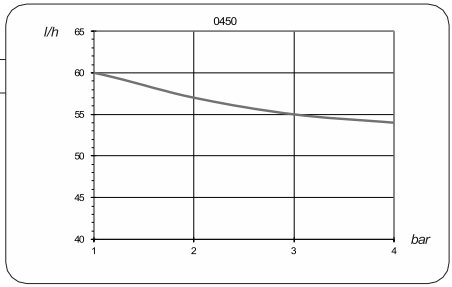

20 01

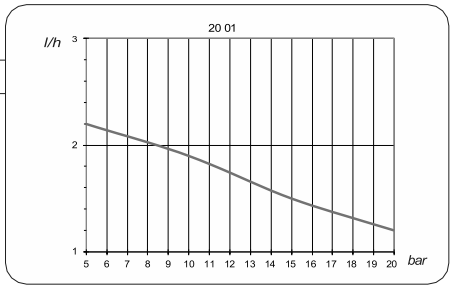

16 7,5

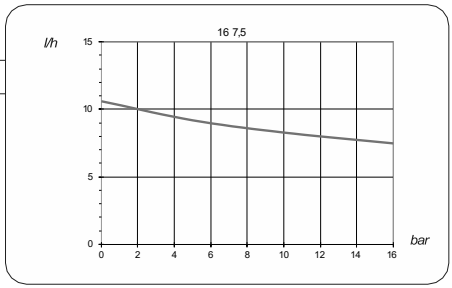

14. NAVIGATION MENU TREE (MAIN SCREEN)

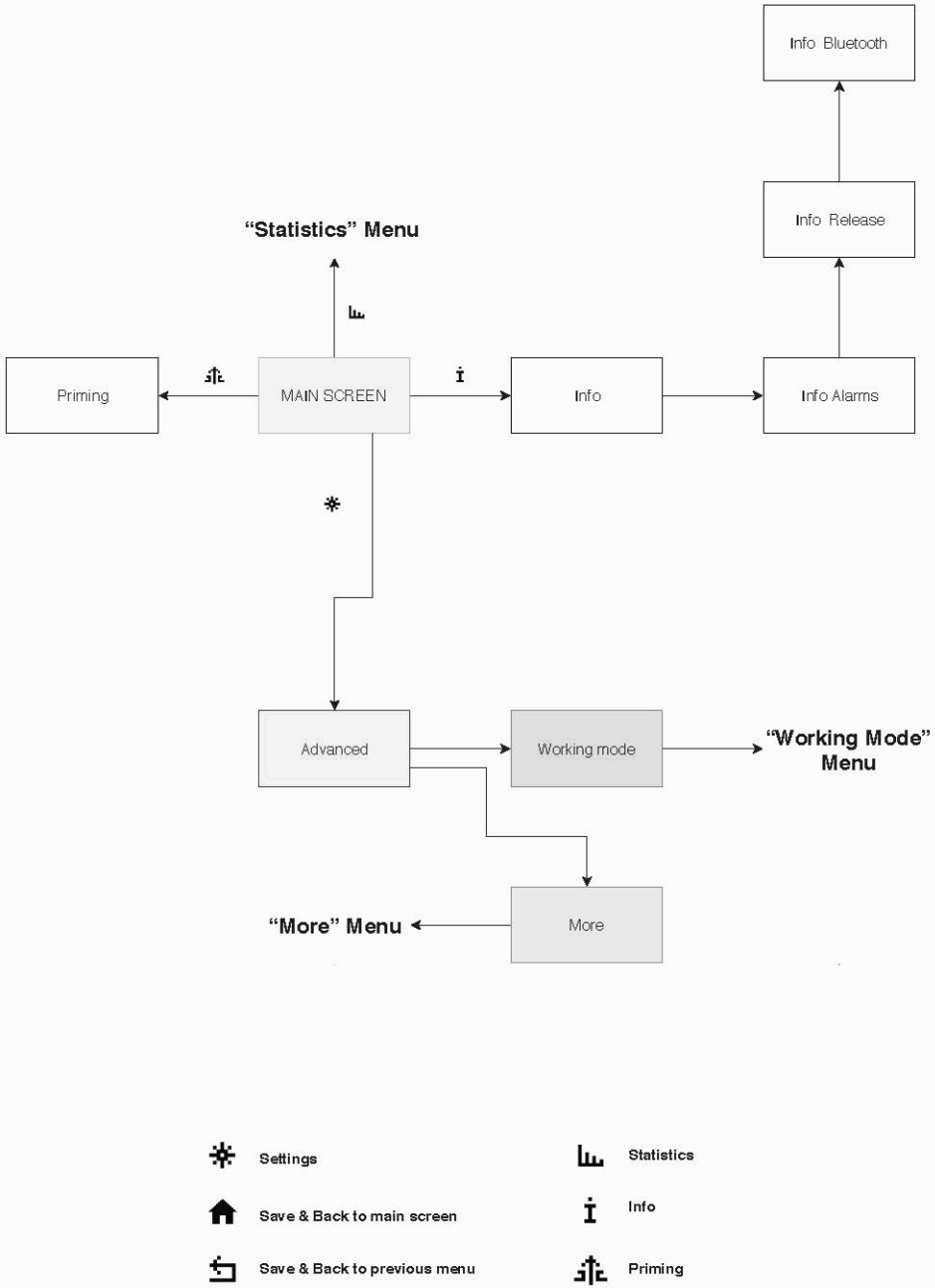

15. NAVIGATION MENU TREE (STATISTICS)

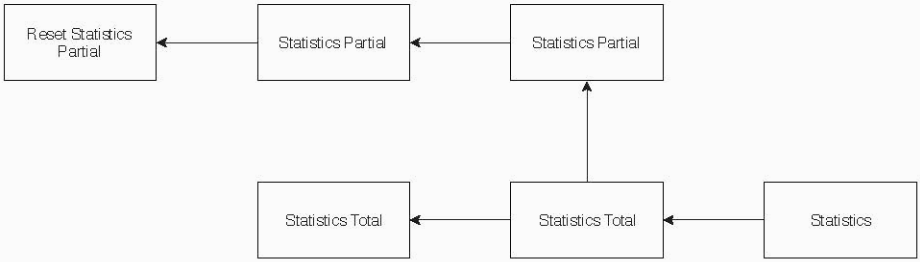

Statistics

16. NAVIGATION MENU TREE (WORKING MODE)

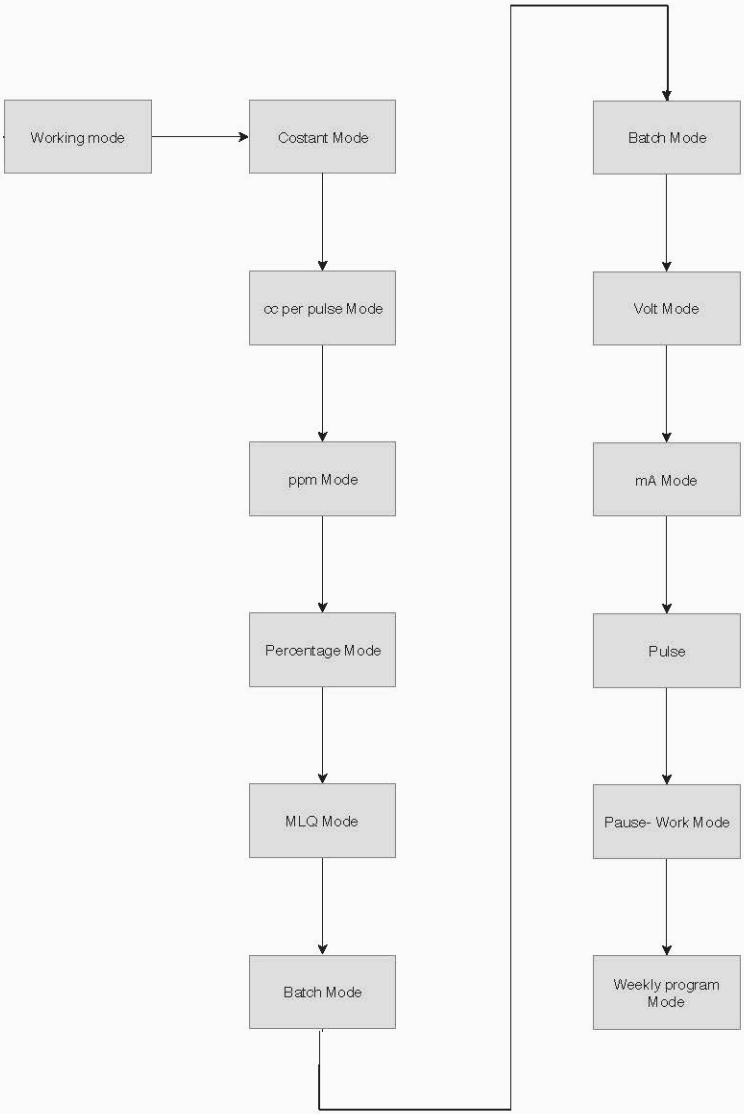

Save & Back to main screen

Save & Back to previous menu

17. NAVIGATION MENU TREE (MORE)

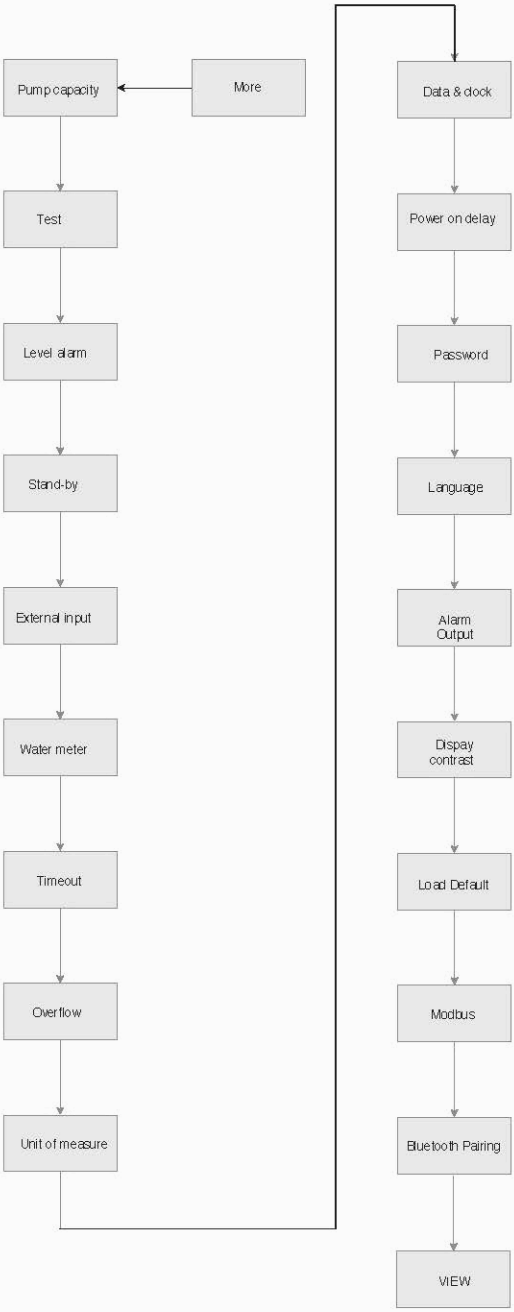

Save & Back to main screen

Save & Back to previous menu

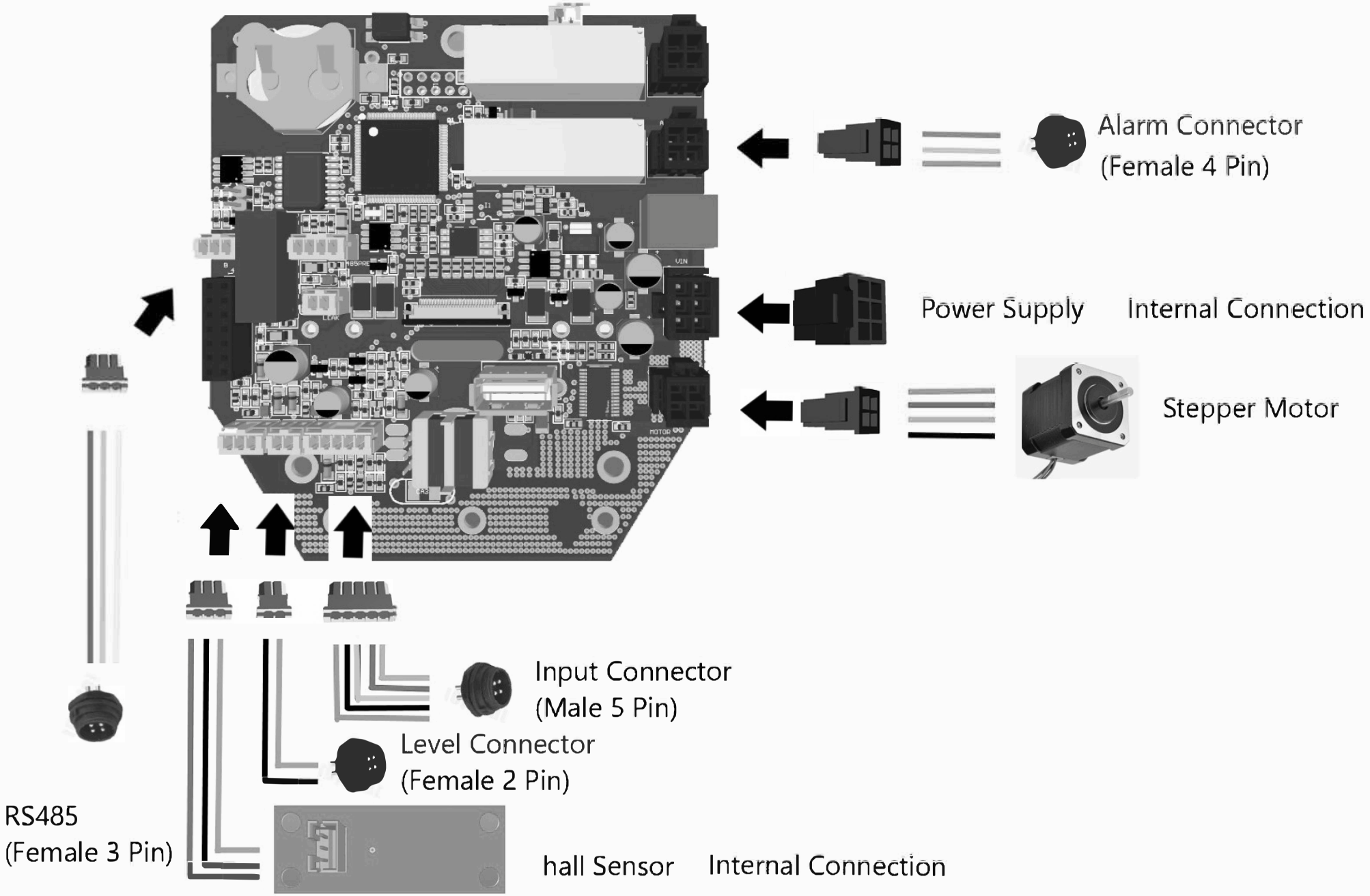
Alarm Connector
(Female 4 Pin)
Power Supply
Internal Connection
Stepper Motor
Input Connector
(Male 5 Pin)
Level Connector
(Female 2 Pin)
RS485
(Female 3 Pin)
hall Sensor
Internal Connection

PRODUCT SERVICE REPAIR FORM

ENCLOSE THE PRESENT FORM TO THE DELIVERY NOTE

DATE .....

SENDER

Company name .....

Address .....

Phone no. .....

Contact person.....

PRODUCT TYPE (see product label)

DEVICE CODE .....

S/N (serial number).....

OPERATING CONDITIONS

Location/installation description .....

.....

Chemical .....

Start-up (date) ..... Running time (approx. hours).....

REMOVE ALL THE LIQUID INTO THE PUMP HEAD AND DRY IT BEFORE PACKAGING IN ITS ORIGINAL BOX.

DESCRIPTION OF PROBLEM

☐ MECHANICAL

- Wear parts .....
- Breakage/other damages .....
- Corrosion.....
- Other .....

☐ ELECTRICAL

- Connections, connector, cables .....
- Operating controls (keyboard, display, etc.) .....
- Elettronics.....
- Other .....

☐ LEAKS

- Connections.....
- Pump head .....

☐ NOT OR INADEQUATE FUNCTION/OTHER

.....

.....

.....

I declare that the dosing pump is free of any hazardous chemical.

Signature of the compiler

Company stamp

PRECAUTIONS RELATING TO DIRECTIVES, REGULATIONS AND STANDARDS

§ CE/EU and UKCA marking

We guarantee that this product meets the essential requirements of the applicable Directives and Regulations based on the following specifications. Please carefully consider the following specifications for use of the product in European Union member countries and the United Kingdom.

• CE/EU harmonized directives and standards

Directives
DIRECTIVE 2006/42/EC
DIRECTIVE 2014/35/EU
DIRECTIVE 2014/30/EU
DIRECTIVE 2011/65/EU
DELEGATED DIRECTIVE (EU) 2015/863

Harmonized standards
EN ISO 12100
EN 809
EN ISO 20361
EN IEC 61326-1
EN 61010-1
EN IEC 63000

• UKCA harmonized regulations and standards

Regulations
2008 No. 1597
2008 2016 No. 1091
2016 No. 1101
2012 No. 3032

Harmonized standards
BS EN ISO 12100
BS EN 809
BS EN ISO 20361
BS EN IEC 61326-1
BS EN 61010-1
BS EN IEC 63000

Disposal of end-of-life equipment by users

This symbol warns you not to dispose of the product with normal waste. Respect human health and the environment by giving the discarded equipment to a designated collection center for the recycling of electronic and electrical equipment. For more information visit the online site.

When dismantling a pump please separate material types and send them according to local recycling disposal requirements. We appreciate your efforts in supporting your local Recycle Environmental Program. Working together we'll form an active union to assure the world's invaluable resources are conserved.