"WT PER Stepper"

WT PER Stepper is a complete, advanced solution for controlling and **dosing chemicals (biocide and inhibitor) in evaporative cooling towers.** The system accurately monitors and regulates water conductivity, a key parameter for maintaining system efficiency and **preventing scaling and corrosion**. It features two peristaltic pumps for dosing the **biocide and inhibitor, which are essential for water treatment and disinfection as they prevent the growth of bacteria and algae.**

Advanced chemical activation allows for safe and optimized dispensing based on programmed cycles or detected conditions. **The system also integrates corrosion and scaling inhibitor dosing, ensuring continuous protection of metal surfaces and piping.**

WT TOWER PER Stepper automatically purges water based on the detected conductivity value, preventing the buildup of dissolved salts and ensuring optimal chemical balance in the cooling water circuit.

Remotely fully controllable.

ENCODER

ERMES digital services

Download on the App Store

GET IT ON Google Play

020925

Main features

- Large LCD screen with visual control system (backlight color based on device activity)
- Encoder knob for instrument control
- 2 PC/TPV peristaltic stepper motor dosing pumps
- PC+ABS case
- Flow control input
- Conductivity reading
- 0 / 10000 µS (ECD)
- 0 / 3000 µS, 0 / 30000 µS (ECDIND)
- 0 / 10000 µS (ECDSIND)
- Temperature reading: 0 to 100°C
- Alarms: level, mains voltage, no flow
- Digital inputs settable as N.O. or N.C.
- Delayed dosing start (max 60 minutes)
- Permanent data storage with system log viewable on the display
- Bluetooth LE / 2.4GHz WiFi connection for APP and remote control
- Firmware upgradeable (via OTA)
- Installation class II (IEC / EN 61010-1)
- Pollution level 2 (IEC / EN 61010-1 e IEC 60664-1)
- IP 65 protection (IEC / EN 60529)
- Power supply: widerange 100 to 240 VAC; 50/60 Hz

Inputs:

- Conductivity Probe
- Water Meter (inlet)
- Level 1 & 2
- Flow Sensor
- Standby

Outputs:

- Alarm (free contact relay)
- MODBUS RTU Port
- Pump 1 & 2
- Vac out 1 5A (solenoid valve / other)

Programming Mode Biocide
Biocide 1 & 2 (weekly 1, 2, 3, 4)
Daily (7 programs)
Dosing with water meter (time based)
Programming Mode Inhibitor
Feed and Bleed
Feed as a % of bleed
Feed as a % of time
Dosing with water meter (time based)
Dosing with water meter (constant ppm)

Via Donatori di Sangue, 1 - 02100 Rieti (Italy)
+39 074622841 | emecpumps.com

Specifications subject to change without notice | R2025

emec SIMPLE AS WATER

IQNET CERTIFIED MANAGEMENT SYSTEM
qualityaustria SYSTEM CERTIFIED
ISO 9001:2015 No.07728/0
ISO 14001:2015 No.00997/0
ISO 45001:2018 No.01121/0

“WT PER Stepper”

Peristaltic features

PERISTALTIC DOSING CAPACITY / HOSE Ø4.8X1.6		
Pressure	Flow Range	RPM Range
bar (psi)	l/h (gal/h)	rpm
2 (29)	0,12 to12 l/h | 0,0317 to 3,17 gal/h	1 to 100

PERISTALTIC DOSING CAPACITY / HOSE Ø1.6X1.6		
Pressure	Flow Range	RPM Range
bar (psi)	l/h (gal/h)	rpm
2 (29)	0,018 to 1,8 l/h | 0,0047 to 0,47 gal/h	1 to 100

PERISTALTIC CONSTRUCTION MATERIALS	
ELEMENT	MATERIAL
Pump’s body	PC / ABS
Cover	PC
Dust Cover Bushing	PEEK / PPS
Hose Clamp Hose Connector Hose Vent	PVDF
Peristaltic Roller	POM DELRIN
Peristaltic Hose (Long Lasting)	TPV

Dimensions (mm)

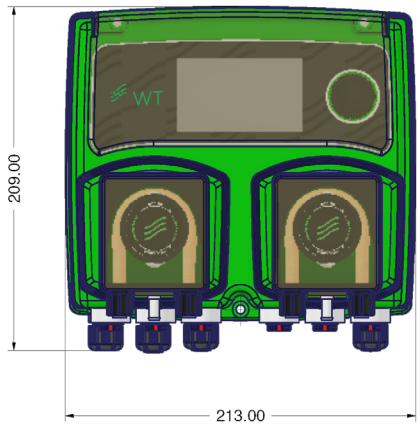

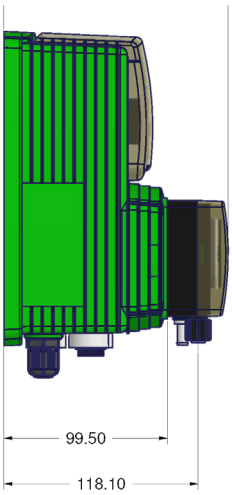

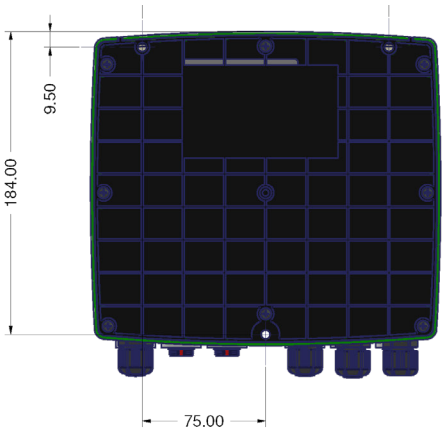

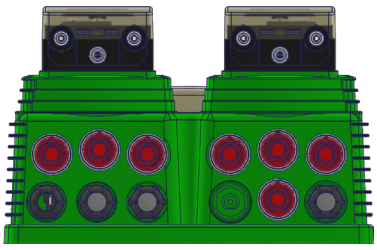

Via Donatori di Sangue, 1 - 02100 Rieti (Italy)
+39 074622841 | emecpumps.com

Specifications subject to change without notice | R2025

emec
SIMPLE AS WATER

IQNET CERTIFIED MANAGEMENT SYSTEM
qualityaustria
SYSTEM CERTIFIED
ISO 9001:2015 No.07728/0
ISO 14001:2015 No.00997/0
ISO 45001:2018 No.01121/0