R990525

# V - VA

PRODUCT LABEL

V

VA

SOLENOID DRIVEN METERING PUMPS
WITH DIAPHRAGM

EN

OPERATING MANUAL

This operating instructions contains safety information that if ignored can endanger life or result in serious injury.

Read these instructions **carefully** before use and keep them for future reference. The original instruction is in Italian. All non-Italian instructions are translations of the original instruction.

Information and specifications on this manual could be uncorrect or could have printing errors. Specifications are subject to change without notice.

Version: R3-11-21

Product Description
*Descrizione Prodotto*

Electromagnetic dosing pump, V and VMS series
*Pompa dosatrice elettromagnetiche, serie V e VMS*

Product Identification Codes
(the "_" symbols complete the product code based on the configuration of the variants)
*Codici Identificativi Prodotto*
*(i simboli "_" completano il codice del prodotto in base alla configurazione delle varianti)*

| | | |
|---|---|---|
| VAF _____ | VHD _____ | VLP _____ |
| VAG _____ | VHE _____ | VLR _____ |
| VAL _____ | VPV _____ | VLS _____ |
| VAM _____ | VRE _____ | VMF _____ |
| VAN _____ | VPX _____ | VML _____ |
| VAO _____ | VRH _____ | VMP _____ |
| VAP _____ | VSA _____ | VMS _____ |
| VAR _____ | VSC _____ | VMV _____ |
| VAS _____ | VSE _____ | VNP _____ |
| VAU _____ | VSL _____ | VNS _____ |
| VAV _____ | VSN _____ | VNT _____ |
| VBA _____ | VSO _____ | VOG _____ |
| VCD _____ | VSP _____ | VOH _____ |
| VCL _____ | VSR _____ | VOP _____ |
| VCO _____ | VSS _____ | VOS _____ |
| VDA _____ | VUA _____ | VP2 _____ |
| VDC _____ | VUG _____ | VPA _____ |
| VDD _____ | VUL _____ | VPB _____ |
| VDS _____ | VUM _____ | VPH _____ |
| VEH _____ | VUS _____ | VPM _____ |
| VEN _____ | VIP _____ | VPN _____ |
| VER _____ | VIS _____ | VPO _____ |
| VES _____ | VLD _____ | VPP _____ |
| VFM _____ | VLE _____ | VPS _____ |
| VFS _____ | VLG _____ | |

# GENERAL SAFETY GUIDELINES

Operating, installing, or maintaining the unit in any way that is not covered in this manual could cause death, serious personal injury, or damage to the equipment.

**ICON**

This manual use the following safety message icon:

**Danger!**
Indicates a hazardous situation which, if not avoided, will result in death or serious injury.

**Warning!**
Indicates a hazardous situation which, if not avoided, could result in death or serious injury.

**Important** - A practice not related to personal injury or additional information.

**Cross reference** - An instance which refers to related information elsewhere in the same document

## PURPOSE OF USE AND SAFETY

**METERING PUMP IS INTENDED FOR CHEMICAL DOSING AND DRINKING WATER TREATMENT.**

Do not use in explosive area (EX).
Do not use with flammable chemicals.
Do not use with radioactive chemicals.

Use after a proper installation.

Use the pump in accordance with the data and specifications printed on the label.

Do not modify or use in a manner inconsistent with the provisions of the operating manual.

**Keep the pump protected from sun and water. Avoid water splashes.**

**In emergencies the pump should be switched off immediately. Disconnect the power cable from the power supply.**

**When using pump with aggressive chemicals observe the regulations concerning the transport and storage of aggressive fluids.**

**When installing always observe national regulations.**

**Manufacturer is not liable for any unauthorized use or misuse of this product that may cause injury, damage to persons or materials.**

**Pump must be accessible at all times for both operating and servicing. Access must not be obstructed in any way.**

**Feeder should be interlocked with a no-flow protection device.**

**Pump and accessories must be serviced and repaired by qualified and authorized personnel only.**

**Before any operation:**
- **always read chemical Material Safety Data Sheet (MSDS);**
- **always wear protective clothing;**
- **always discharge the liquid end before servicing the pump.**
- **empty and rinse the liquid end before work on a pump which has been used with hazardous or unknown chemicals.**

**This equipment requires regular maintenance to ensure potability requirements of the water and maintenance of improvements as declared by the manufaturer.**

**ENVIRONMENTAL SAFETY**

**Work area**
Always keep the pump area clean to avoid and/or discover emissions.

**Recycling guidelines**

**EWC code: 16 02 14**

Always recycle according to these guidelines:
1. If the unit or parts are accepted by an authorized recycling company, then follow local recycling laws and regulations.
2. If the unit or parts are not accepted by an authorized recycling company, then return them to the nearest representative.

**Waste and emissions regulations**
Observe these safety regulations regarding waste and emissions:
- Dispose appropriately of all waste.
- Handle and dispose of the dosed chemical in compliance with applicable environmental regulations.
- Clean up all spills in accordance with safety and environmental procedures.
- Report all environmental emissions to the appropriate authorities.

---

**LABELS**

Fig. 1. Product label.

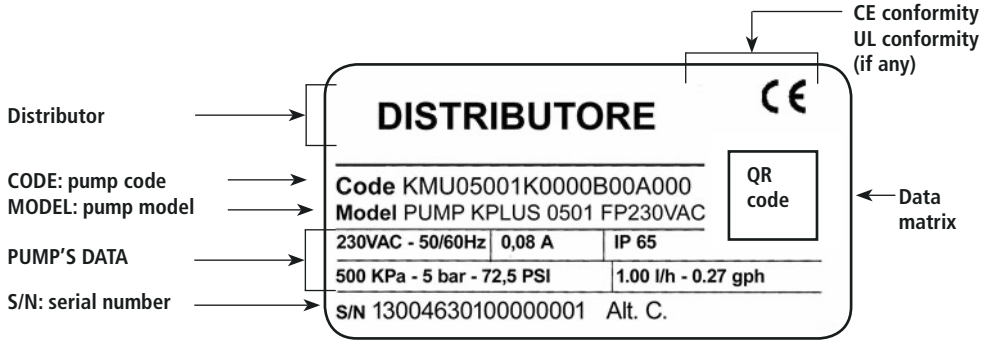


**Spare parts**

For spare parts orders or any other communication, refer to product label.
Code (CODE) and serial number (S / N) uniquely identify the pump.

*Introduction:*

"V" Series metering pumps are the ideal solution for low / middle dosing of chemicals. All control and setup parameters are available using accurate control knobs and a visual system (led). "V" Series metering pumps have digital On/Off switch to ensure dosing activities (available on some models only).

| | |
|---|---|
| V | constant metering pumps with manual venting PVDF pump head |
| VA | constant metering pumps with self venting PVDF pump head |

*Pump capacity:*

Flow rate is determined by the stroke speed (frequency) adjustment. The stroke speed is adjustable from 0 to 100% using the adjustment knob.
However dosing accuracy is guarantee within an adjustment range from 30% to 100%. The led on the panel shows the status activity of the pump.

*Models*

| Series | Mod. | Description |
|---|---|---|
| V - VA | CO | Constant pump with stroke speed (frequency) adjustment and a divider mode to reduce by 10 times the pump capacity. |
| | CL | Constant pump with level control, stroke speed (frequency) adjustment and a divider mode to reduce by 10 times the pump capacity. |
| | COG | Constant pump with stroke speed (frequency) adjustment and a divider mode to reduce by 10 times the pump capacity. Double measurement scale (24h): 0-300 gr/day or 0-3000 gr/day. |
| | CLG | Constant pump with level control, stroke speed (frequency) adjustment and a divider mode to reduce by 10 times the pump capacity. Double measurement scale (24h): 0-300 gr/day or 0-3000 gr/day. |
| | IS | Proportional/constant pump driven by a digital signal. |

***Legend***

a. **Alternating Current;** ~

b. **DC,** ⎓

c. **Protective Earth;** ⏚

d. **Standby;** ⏻

e. **Warning -** ⚠

## 2. Unpacking

*Included into package:*

| | |
|---|---|
| n.4 | Dibbles ø6 |
| n.4 | Self tapping screws 4,5 x 40 |
| n.1 | Delayed fuse 5 X 20 |
| n.1 | Foot filter with valve |
| n.1 | Injection valve |
| n. 1 | Level probe (not included in VCO model) |
| m 2 | Delivery pipe* (opaque PE) |
| m 2 | Suction pipe * (transparent PVC) |
| m 2 | Discharge pipe (transparent PVC 4x6) |
| n.1 | This installation manual |
| * | If hose is 6x8 then there is only a 4mt long hose. Cut to obtain suction and delivery hoses. |

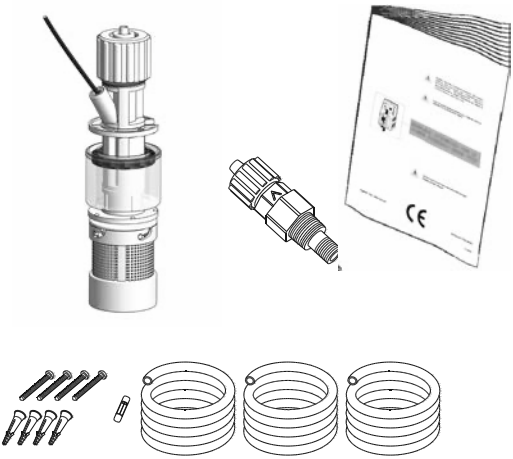

*PLEASE DO NOT TRASH PACKAGING.*
*IT CAN BE USED TO RETURN THE PUMP.*

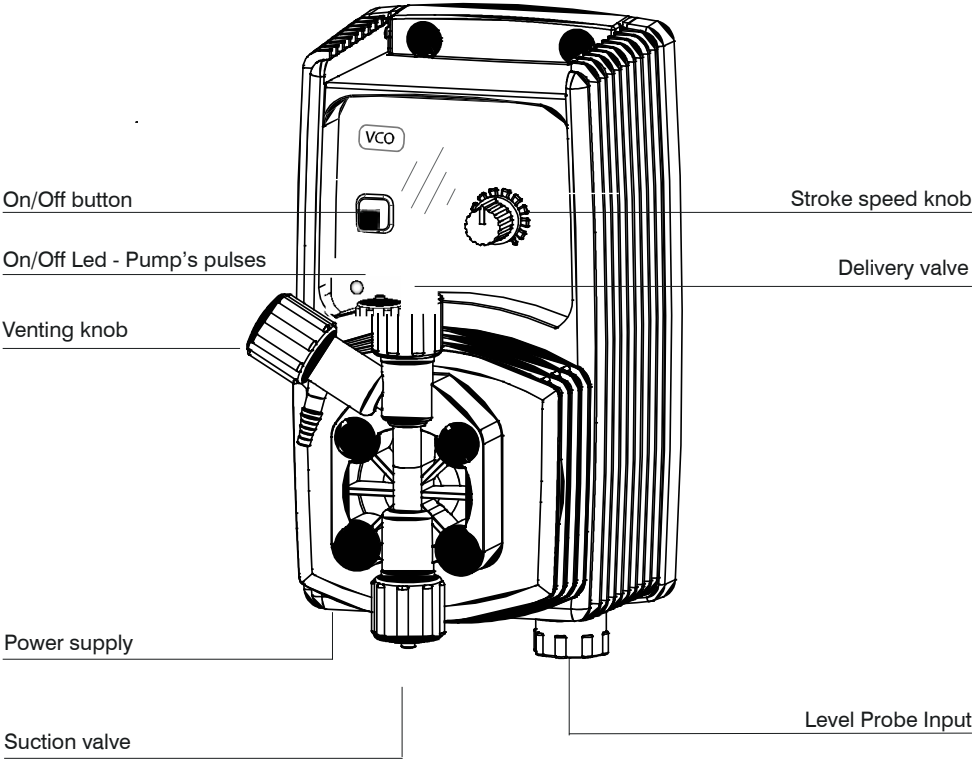


*Note:*
Shown image does not represent a specific pump's model. It is only for general purpose.

# 4. Before to Install warnings

Pump's installation and operativity is performed in 4 main steps:

*Pump's installation*
*Hydraulic Installation (hoses, level probe, injection valve)*
*Electrical Installation (main power connection, priming)*
*Programming the pump.*

Before to start, please read carefully the following safety information.

*Protective clothes*

*Wear always protective clothes as masks, gloves, safety glasses and further security devices during ALL installation procedure and while handling chemicals.*

*Installation location*

*Pump must be installed in a safety place and fixed to the table / wall to avoid vibration problems!*

*Pump must be installed in a easy accessible place!*

*Pump must be installed in horizontal position!*

*Avoid water splashes and direct sun!*

*Hoses and Valves*

*Suction and delivery hoses must be installed in vertical position!*
*All hoses connections must be performed using only hands' force!*
*No tongs required!*

*Delivery hose must be firmly fixed to avoid suddenly movements that could damage near objects!*

*Suction hose must be shorter as possible and installed in vertical position to avoid air bubbles suction!*

*Use only hoses compatibles with product to dose! See chemical compatibility table. If dosing product is not listed please consult full Compatibility Table or contact chemical's manufacturer!*

**Feeder should be interlocked with a no-flow protection device to automatically shut-off the pumps when there is no flow!**

**Adequate measures shall be taken to prevent cross connection of chemicals!**

**Chemical feeding must be stopped during backwash cycles and periods of noflow as these conditions may introduce the potential for chemical overdosing. Not doing so may result in elevated chemical concentrations and hazerdous gas introduction into the pool or spa.**

Pump must be installed in a stable support at a maximum height (from tank's bottom) of 1,5 meters.

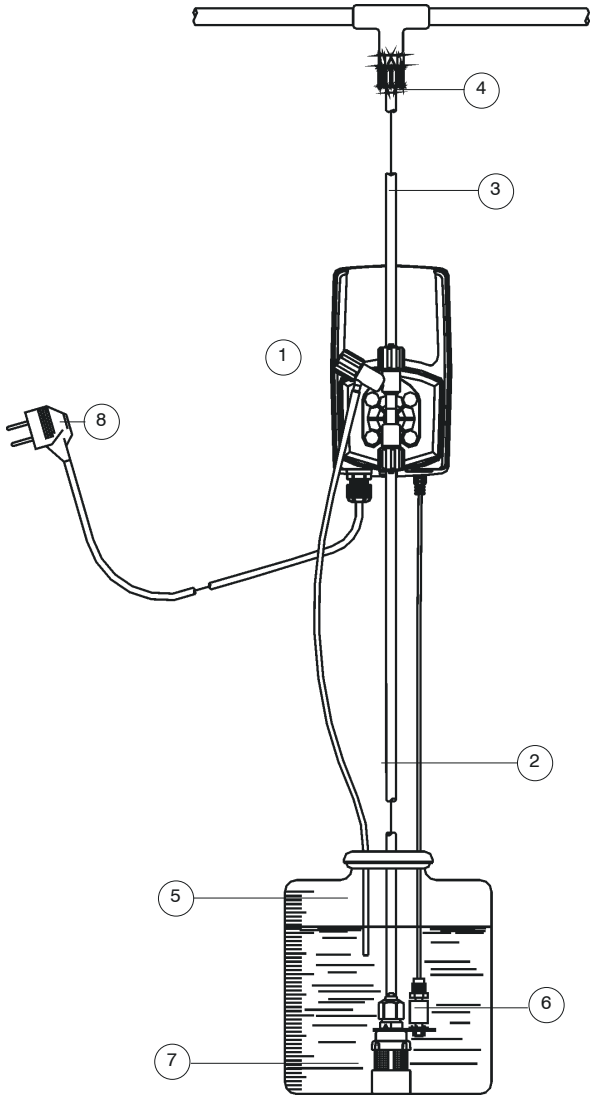


1 - Dosing Pump
2 - Suction Hose
3 - Delivery Hose
4 - Injection Valve
5 - Air discharge
6 - Level Probe
7 - Foot Filter
8 - Power Cable

# 6. Hydraulic Installation

Hydraulic connections are:

*Suction Hose with level probe and foot filter*
*Delivery Hose with injection valve*
*Venting hose*

*Suction Hose.*

Completely unscrew tightening nut from pump's head and remove assembling components: *tightening nut, holding ring and pipe holder.*

Assembly as shown in fig. (A). Insert hose into pipe holder until it reaches the bottom.

Lock hose on pump's head by screwing down the tightening nut.
Use only hands to do it!

Connect other side of the hose to the foot filter using the same procedure.

fig. (A)

*Assembling foot filter with level probe.*

Level probe must be assembled with foot filter using the provided kit.
Foot valve is made to be installed into tank's bottom without sediments priming problem.

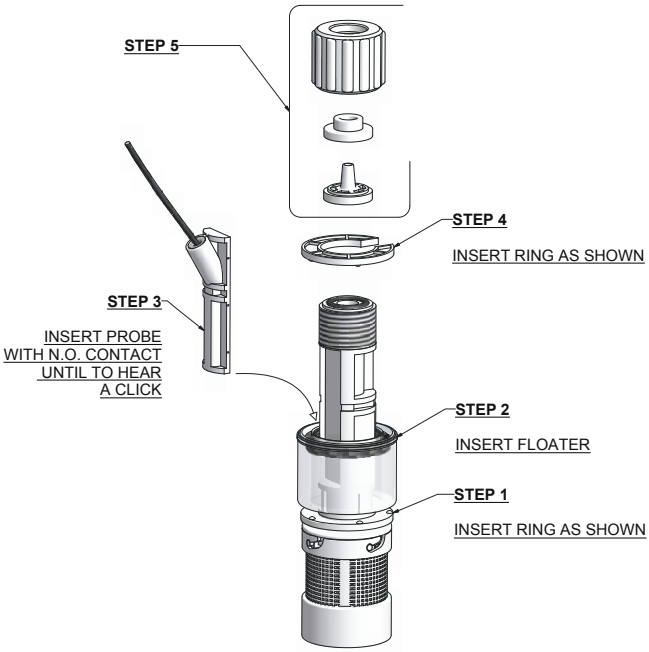


Connect BNC from level probe into pump's level input (front side of the pump).
Put level probe assembled with foot filter into tank's bottom.

Warning: If there is a mixer installed into tank, install a suction lance instead of level probe / foot filter.

*Delivery Hose.*

Completely unscrew tightening nut from pump's head and remove assembling components: *tightening nut, holding ring and pipe holder.*

Assembly as shown in fig. (A). Insert hose into pipe holder until it reaches the bottom.

Lock hose on pump's head by screwing down the tightening nut.
Use only hands to do it!

Connect other side of the hose to the injection valve using the same procedure.

# 7. Pump head

*Injection Valve.*

Injection valve must be installed on plant from water's input.
Injection valve will open at pressure greater than 0,3bar.

*Venting hose.*

Insert one side of Venting hose into discharge connector as shown in fig (C).

Insert other side of Venting hose into product's tank.
During priming procedure product exceeding will flow into tank.

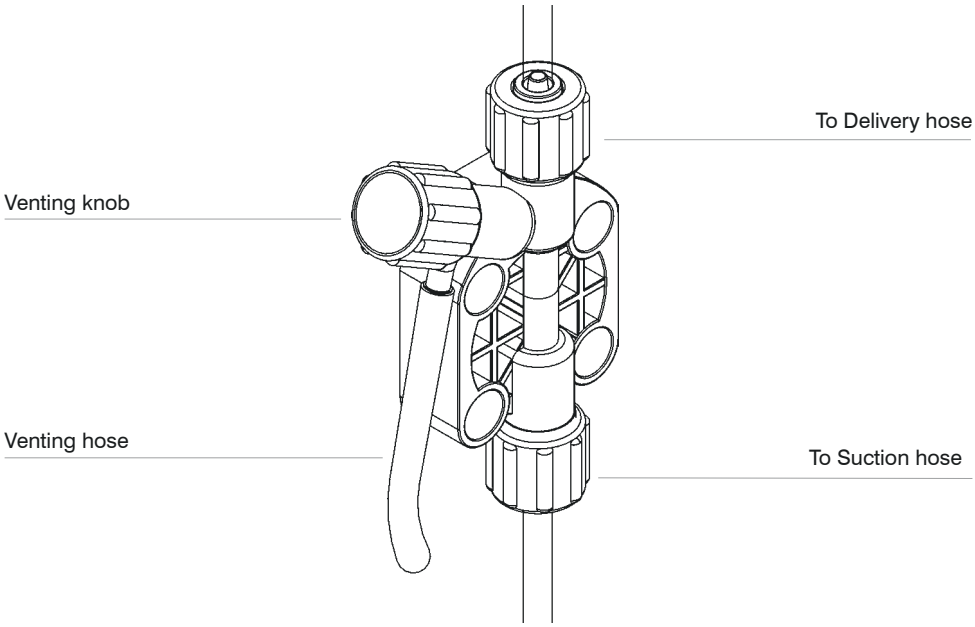


fig (C)

For priming procedure see the related chapter.

*Self-venting pump head.*

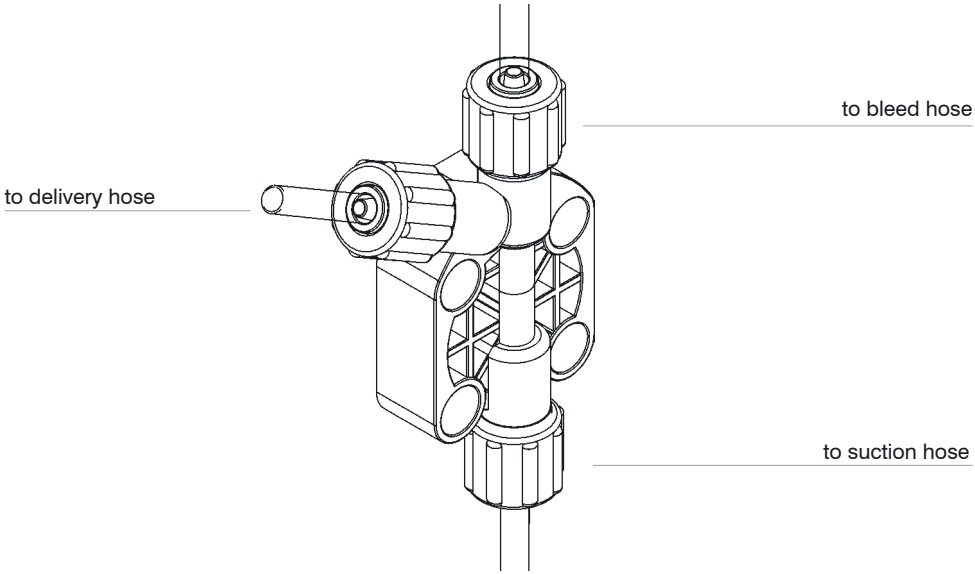


*Self-venting* pump head must be used when using chemicals that produce gas (i.e. hydrogen peroxide, ammonium, sodium hypoclorite at particular conditions).

Hoses assembling procedure (*including purge hose*) is described in fig. (A).

*Notes:*

- suction, delivery and venting valves are DIFFERENT! Do not exchange them!

- delivery and purge hoses are made of same material!

- it's allowed to lightly bend Venting hose!

- during calibration procedure ("TEST") insert Venting hose into BECKER test-tube!

# 8. Electrical installation

All electrical connections must be performed by AUTHORIZED AND QUALIFIED personnel only. Before to proceed, please, verify the following steps:

- verify that pump's label values are compatible with main power supply.

- pump must be connected to a plant with a differential switch (0,03A sensitivity) if there isn't a good ground.

- to avoid damages to the pump do not install it in parallel with heavy inductance load (for example: engines). A relay switch must be used. See below picture.

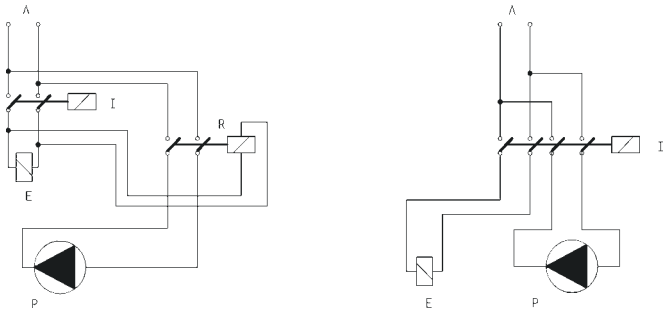


*P - Dosing Pump*
*R - Relay*
*I - Switch or safety device*
*E - Electrovalve or inductance load*
*A - Main Power*

- On pump's mother board there is a further protection against over voltages (275V - 150V) and distribution line noises (4KV for max 50$\mu$sec) as shown:

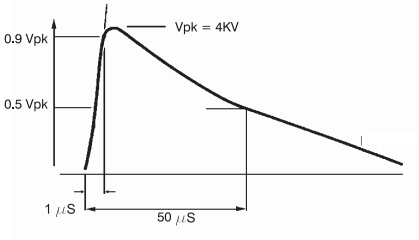

Once verified previous steps proceed as follows:

- check that “BNC” of level probe has been connected as described in “Hydraulic Installation” chapter.

- connect “BNC” and external signal to pump’s “INPUT” connectors.

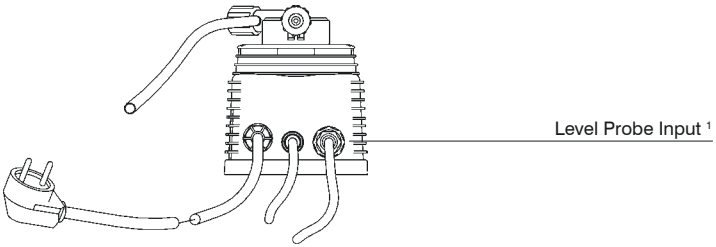


*(bottom view)*

[1] *Level Probe Input available on: VCL*

*WARNING*
*IF EQUIPMENT IS SUPPLIED WITH A PLUG:*

*If an appliance coupler or separable plug is used as the disconnecting device, it shall be readily identifiable and easily reached by the operator. For single-phase portable equipment, a plug on a cord of length not greater than 3m is considered to be easily reached.*

*WARNING*
*IF EQUIPMENT IS NOT SUPPLIED WITH A PLUG:*

*a) a switch or circuit-breaker shall be included in the building installation*
*b) it shall be in close proximity to the equipment and within easy reach of the operator*
*c) it shall be marked as the disconnetting device for the equipment*

# 9. Models

## LEVEL ALARM

CL type pumps are provided with a liquid level alarm to indicate product tank is empty. The level probe is connected to the right BNC plug on pump's bottom panel. The level probe is made of a N.O. reed contact (10VA, 1A max., 230Vac max.) closed by a floating magnet housed in a (PP) plastic box. When the product level goes below the minimum the magnet closes the reed contact. The pump stops and the red LED on pump's front panel indicates the alarm status.

## PUMP TYPES

*Pumps mod. "VCLF" and "VCL" (12-24 Vac/Vdc) are equipped with a bicolour led.*
*Led on, red colour: low level product alarm. Check product's tank and restore the level.*
*Led on, blinking green colour: pump normal operating mode.*
*Led on, blinking green colour (one second on, one second off): power supply out of range. Check pump's label and check the main power.*

VCO

Constant pump with flow control (front panel knob may be set from 0% to 100% of pump nominal capacity). Flow control is electronically set and it operates on pump injections number. To avoid linearity problem do not set the knob of pump flow between 0% and 10%.VCO may operate in constant dosing mode or On-Off mode (using an external signal).Dosing example using an VCO 0505: to dose 2,5 l/h at 5bar counter-pressure rotate front panel knob to 50%.

VCO / VCOG has a divider (x- 0,1) to reduce by ten times the pump capacity by dividing the pump stroke speed.
How to enable “divider mode”:

- set the pump into OFF* mode;
- keeping pressed the on/off button, wait 3 flashes from the status led. The pump will change activity led color in orange then it will start the dosing activity with the stroke speed reduced ten times than the value set on stroke lenght knob.

To disable the “divider mode”, put the pump in OFF mode. Keeping pressed the on/off button, wait 3 flashes of the status led. Pumps's led will change in green color.

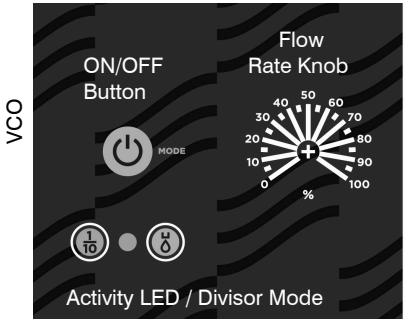


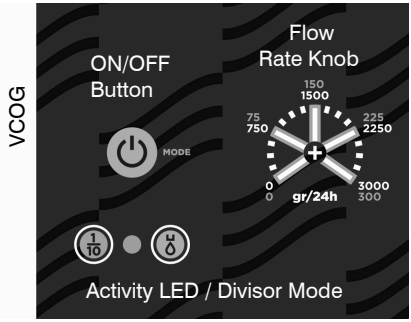


LED
The led on the frontal panel shows the pump’s operating status through 5 flashing:

| LED | PUMP’S STATUS |
|---|---|
| Three times per second blinking (RED) | Too low power supply |
| Two times per second blinking (RED) | Too high power supply |
| One time every 2 seconds blinking (GREEN)<br>One time every 2 seconds blinking into DIVIDE mode (ORANGE) | OFF mode. Pump powered. |
| Always ON (GREEN), but off when pump strokes<br><br>Always ON (ORANGE), but off when pump strokes into DIVIDE mode | ON mode. Pump powered STANDARD mode. (120strokes per minute)<br><br>ON mode. Pump powered DIVIDE mode. (120strokes per minute) |
| Always ON (GREEN), but off when pump strokes<br><br>Always ON (ORANGE), but off when pump strokes into DIVIDE mode | ON mode. Pump priming and operating in STANDARD VCOG mode.<br><br>ON mode. Pump priming and operating in DIVIDE VCOG mode. |

VCOG is automatic priming model: when the pump is working (ON - RED LED), keep pressed on/off key for 7 seconds. The pump starts priming. Leave the key to turn off the pump (OFF - ORANGE LED).

LED ON VCO PUMPS WITH 12/24 VAC/VDC POWER SUPPLY

| LED | PUMP'S STATUS |
|---|---|
| Three times per second blinking (GREEN) | Too low power supply |
| Two times per second blinking (GREEN) | Too high power supply |
| One time every 2 seconds blinking (GREEN) | OFF mode. Pump powered. |
| Always ON (GREEN), but off when pump strokes | ON mode. Pump priming and operating in STANDARD mode . |
| Always ON (GREEN), but off every 2 seconds | ON mode. Pump priming and operating in DIVIDE mode . |

# 9. Models

VCL

*Constant dosing pump* with *level alarm*.
A red led indicates that the product's tank is empty. During this condition the pump does not dose.
The pump has flow control (front panel knob may be set from 0% to 100% of pump nominal capacity).
Flow control is electronically set and it operates on pump injections number. To avoid linearity problem do not set the knob of pump flow between 0% and 10%.

VCL / VCLG has a divider (x- 0,1) to reduce by ten times the pump capacity by dividing the pump stroke speed.
How to enable "divider mode":

- set the pump into OFF* mode;
- keeping pressed the on/off button, wait 3 flashes from the status led. The pump will change activity led color in orange then it will start the dosing activity with the stroke speed reduced ten times than the value set on stroke lenght knob.
- To disable the "divider mode", put the pump in OFF mode. Keeping pressed the on/off button, wait 3 flashes of the status led. Pumps's led will change in green color.

VCL

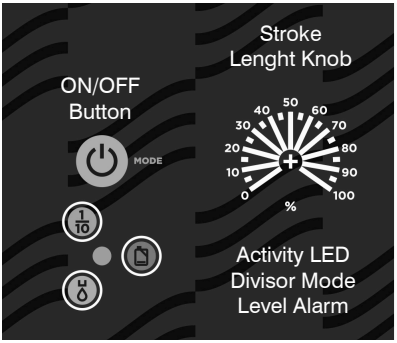


VCLG

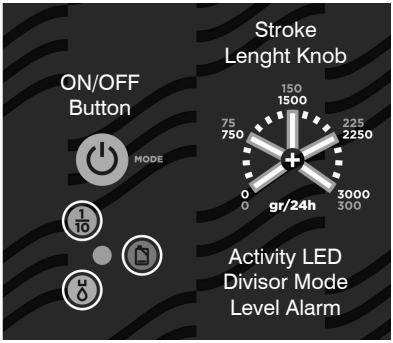


LED
The led on the frontal panel shows the pump's operating status through 5 flashing:

| LED | PUMP'S STATUS |
|---|---|
| Three times per second blinking (RED) | Too low power supply |
| Two times per second blinking (RED) | Too high power supply |
| One time every 2 seconds blinking (GREEN)<br>One time every 2 seconds blinking into DIVIDE mode (ORANGE) | OFF mode. Pump powered. |
| Always ON (GREEN), but off when pump strokes<br><br>Always ON (ORANGE), but off when pump strokes into DIVIDE mode | ON mode. Pump powered STANDARD mode. (120strokes per minute)<br><br>ON mode. Pump powered DIVIDE mode. (120strokes per minute) |
| Always ON (GREEN), but off when pump strokes<br><br>Always ON (ORANGE), but off when pump strokes into DIVIDE mode | ON mode. Pump priming and operating in STANDARD VCLG mode.<br><br>ON mode. Pump priming and operating in DIVIDE VCLG mode. |
| FIXED RED LED | Level Alarm (VCL / VCL models only) |

VCLG is automatic priming model: when the pump is working (ON - RED LED), keep pressed on/off key for 7 seconds. The pump starts priming. Leave the key to turn off the pump (OFF - ORANGE LED).

LED ON VCL PUMPS WITH 12/24 VAC/VDC POWER SUPPLY

| LED | PUMP'S STATUS |
|---|---|
| Three times per second blinking (GREEN) | Too low power supply |
| Two times per second blinking (GREEN) | Too high power supply |
| One time every 2 seconds blinking (GREEN) | OFF mode. Pump powered. |
| Always ON (GREEN), but off when pump strokes<br><br>Always ON (GREEN), but off every 2 seconds | ON mode. Pump priming and operating in STANDARD mode .<br><br>ON mode. Pump priming and operating in DIVIDE mode . |
| FIXED RED LED | Level Alarm (VCL / VCL models only) |

*VIS*

*Proportional/constant* pump driven by a digital signal.

Setting the switch on the *CONSTANT* position, the pump has stroke speed adjustment between 0 and 100% of indicated capacity (see label on pump type). The % marked knob sets the pump capacity, changing linearly the magnet stroke number per minute. It is strongly suggested to not operate the pump in the range from 0 to 10%, since there is not a linear correlation with the pump stroke speed in that range.

Setting the switch on the *PROPORTIONAL* position, to each external voltage free pulse correspond a magnet stroke. When proportional position is set, the % marked knob does NOT affect the pump capacity. IS proportional dosing pump can be driven by any external device (PCs, PLCs, etc) that produce a digital signal. The digital signal (N.O. contact) must be applied to the cable provided with the pump, already internal connected. If the digital signal is produced by an “Open Collector” transistor take care of connections:

- red wire : *positive (+)*
- black wire : *negative (-)*

How to enable “Proportional mode”:
- set the pump into OFF* mode;
- keeping pressed the on/off button, wait 3 flashes from the status led.

Follow the same procedure to disable the “Proportional mode”.

VIS

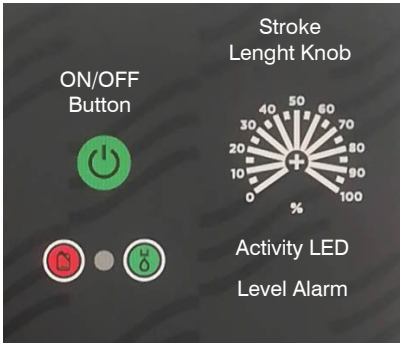


**LED**

The led on the frontal panel shows the pump’s operating status through different flashing:

| LED COLOUR | BLINKING | PUMP’S STATUS |
|---|---|---|
| RED | Three times per second | Too low power supply |
| RED | Two times per second | Too high power supply |
| RED | Fixed | Level Alarm |
| GREEN | One time every 4 seconds | ON Proportional working mode |
| GREEN | Blink at pump stroke | ON Constant working mode |

MANUAL PRIMING / DISCHARGING

1. Connect the pump to main power.

2. Rotate front panel knob to 70%.

3. Turn on the pump.

4. Rotate Venting knob (open it completely).

5. The chemical will begin to flow into Venting hose. Close the Venting knob.

6. Proceed to normal operating mode.

# 11. Troubleshooting

| PROBLEM | POSSIBLE CAUSE |
|---|---|
| Pump doesn't turn on. | *Pump isn't powered. Connect it to main supply.*<br><br>*Pump's protection fuse is broken. Replace it. See replacement procedure.*<br><br>*Pump's main board is broken. Replace it. See replacement procedure.* |
| Pump is not dosing and solenoid is operating. | *The foot filter is obstructed. Clean it.*<br><br>*Suction hose is empty. Pump must be primed. Repeat priming procedure.*<br><br>*Air bubbles inside hydraulic circuit. Check valves - hoses - fittings.*<br><br>*Product to dose is generating gas. Turn Venting knob and let air flow away.*<br><br>*Use a self-venting pump head.* |
| Pump is not dosing and solenoid isn't operating or slightly operating. | *Crystals presence inside valves. Check them and try to dose 2-3 liters of normal water. Change valves.*<br><br>*Injection valve obstructed. Change it.* |

# 12. Fuse and main board replacement

Fuse or main board replacement is allowed to qualified personnel only. Before to operate disconnect the pump from main power and all hydraulic connections.

For fuse replacement is necessary to use a 3x16 and 3x15 screwdriver and a new fuse (same model of old one).

For main board replacement is necessary to use a 3x16 and 3x15 screwdriver and a new main board (same model of old one).

*Fuse replacement procedure:*

- Remove 6 screws from pump's back.

- Pull pump's back cover until it's completed separated from pump's front. Be careful of the knob's spring.

- Locate the blown fuse and replace it.

- Reassemble the pump.

- Reinsert screws.

*Main board replacement procedure:*

- Remove 6 screws from pump's back.

- Pull pump's back cover until it's completed separated from pump's front. Be careful of the knob's spring.

- Remove board's screws.

- Completely disconnect wires from main board and replace it. Reinsert screws.

- Reconnect wires to the main board (see enclosed picture).

- Reassemble the pump.

- Reinsert screws.

# 13. Main board

*VCO*

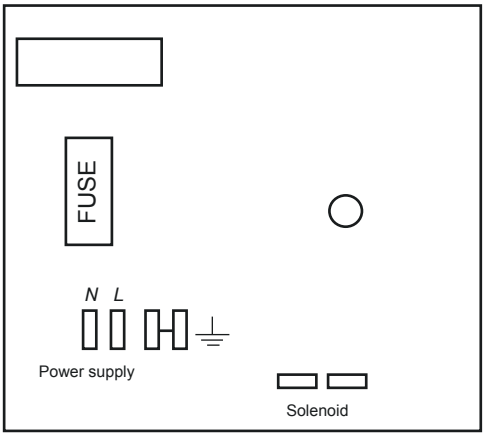


*VCL*

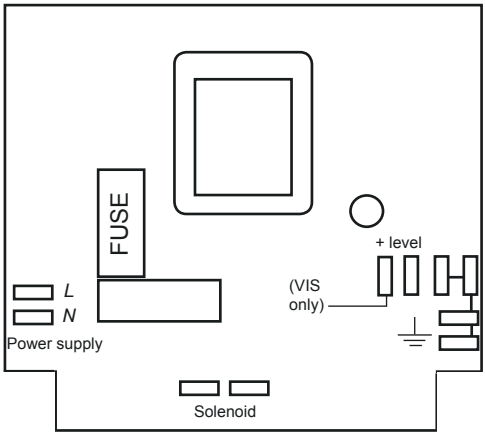

Maintenance schedule

**In order to ensure the requirements of potable drinking water treated and the maintenance of the improvements as declared by the manufacturer, this equipment must be checked at least once a month.**

**OPERATOR PROTECTION**
**Use safety equipment according to the company regulations.**
**Use this safety equipment within the work area during installation, service and when handling chemicals:**
- **protective mask**
- **protective gloves**
- **safety goggles**
- **ear plugs or hear muffs**
- **further security device, if necessary.**

**POWER SUPPLY DISCONNECTION**
**Always disconnect power to the motor before you perform any installation or maintenance tasks. Failure to disconnect power will result in serious physical injury.**

**Installation and maintenance tasks should be carried out by AUTHORIZED AND QUALIFIED PERSONNEL only in accordance with local regulations.**

Use original spare parts.

---

Maintenance inspection

**Shutdown the dosing pump before any maintenance operation** **Shutdown procedure.**

A maintenance schedule includes these types of inspections:
- Routine maintenance and inspections
- Three-month inspections
- Annual inspections

Shorten the inspection intervals appropriately if the pumped chemical is abrasive or corrosive.

**Routine maitenance and inspections**
Perform these tasks whenever you perform routine maintenance:
- Inspect the seal. Ensure that there are no leaks from the mechanical seal.
- Check electrical wiring
- Check for unusual noise and vibration (noise allowed 73 dbA; ± 5 dB).
- Check the pump and piping for leaks.
- Check for corrosion on parts of the pump and / or on hoses.

**Three-month inspections**
Perform these tasks every three months:
- Check that the tightenings.
- Check the mechanical seal if the pump has been left idle.

**Annual inspections**
Perform these inspections one time each year:
- Check the pump capacity (as per nameplate).
- Check the pump pressure (as per nameplate).
- Check the pump power (as per nameplate).

f the pump performance does not satisfy your process requirements, and the process requirements have not changed, then perform these steps:
1. Disassemble the pump.
2. Inspect it.
3. Replace worn parts.

---

Shutdown procedure

**This procedure SHOULD BE CARRIED OUT BY AUTHORIZED AND QUALIFIED PERSONNEL**

**OPERATOR PROTECTION**
**Use safety equipment according to the company regulations.**
**Use this safety equipment within the work area during installation, service and when handling chemicals:**
- **protective mask**
- **protective gloves**
- **safety goggles**
- **ear plugs or hear muffs**
- **further security device, if necessary.**

Shutdown the dosing pump **before any maintenance operation** or **before long downtimes**.
Disconnect power and ensure it cannot be restarted.

**Depressurize the system. The liquid may leak splashing.**

Drain the chemical from pump head.
Release the pressure and disconnect the disharge pipe from the discharge valve.
Rinse the pump head and clean all valves.

# B Appendix. Construction Materials and Technical info

## TECHNICAL FEATURES

*Power supply*: 230 VAC (180-270 VAC) - 50/60 Hz
*Power supply*: 115 VAC (90-135 VAC) - 50/60 Hz
*Power supply*: 24 VAC (20-32 VAC) - 50/60 Hz
*Power supply*: 12 VDC (10-16 VDC)

*Pump strokes:* 0 - 180
*Suction Height:* 1,5 metres
*Environment Temperature:* 0 - 45°C (32 - 113°F)
*Chemical Temperature:* 0 - 50°C (32 - 122°F)
*Installation Class:* II
*Pollution Level:* 2
*Audible Noise:* 73dbA
*Packaging and Transporting Temperature:* -10-+50°C (14 - 122°F)
*Protection degree* IP65

## MANUFACTURING MATERIALS

*Case:* PPO
*Pump head:* PVDF
*Diaphragm:* PTFE
*Balls:* CERAMIC, GLASS, PTFE, SS *
*Suction Pipe* PVC
*Delivery Pipe:* PE
*Valve Body:* PVDF
*O-ring:* FP, EP, WAX, SI, PTFE *
*Injection connector* PP, PVDF (ceramic, HASTELLOY C276 spring)
*Level Probe:* PP, PVDF *
*Level probe cable:* PE
*Foot Filter:* PP, PVDF *

* as ordered.

| CAPACITY | | | | | | |
|---|---|---|---|---|---|---|
| MODEL | FLOW | | | cc per STROKE | Maximum pressure | |
| | min cc/h | max l/h | Max GPH | | bar | PSI |
| 2001 | 97,2 | 1 | 0,26 | 0,09 | 20 | 290 |
| 1802 | 205,2 | 2 | 0,53 | 0,19 | 18 | 261 |
| 1804 | 399,6 | 4 | 1,1 | 0,37 | 18 | 261 |
| 1502 | 205,2 | 2 | 0,5 | 0,19 | 15 | 217 |
| 1504 | 399,6 | 4 | 1,1 | 0,37 | 15 | 217 |
| 1505 | 496,8 | 5 | 1,3 | 0,46 | 15 | 217 |
| 1004 | 399,6 | 4 | 1,1 | 0,37 | 10 | 145 |
| 1005 | 496,8 | 5 | 1,3 | 0,46 | 10 | 145 |
| 1010 | 1004,4 | 10 | 2,6 | 0,93 | 10 | 145 |
| 0706 | 604,8 | 6 | 1,6 | 0,56 | 7 | 101 |
| 0510 | 1004,4 | 10 | 2,6 | 0,93 | 5 | 72 |
| 0512 | 1198,8 | 12 | 3,2 | 1,11 | 5 | 72 |
| 0501 | 97,2 | 1 | 0,3 | 0,09 | 5 | 72 |
| 0502 | 99,2 | 2 | 0,5 | 0,12 | 5 | 72 |
| 0408 | 799,2 | 8 | 2,1 | 0,74 | 4 | 58 |
| 0310 | 1004,4 | 10 | 2,64 | 0,93 | 3 | 43 |
| 0215 | 1501,2 | 15 | 3,96 | 1,39 | 2 | 29 |
| 0116 | 1598,4 | 16 | 4,2 | 1,48 | 1 | 14 |

*Pump Head J*

20 01

l/h 01

bar 20

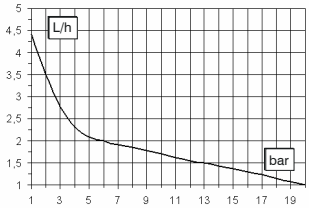


*Pump Head K*

18 04

l/h 04

bar 18

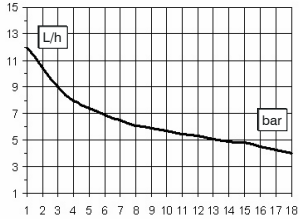


*Pump Head K*

18 02

l/h 02

bar 18

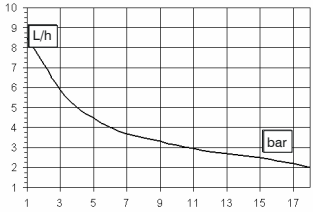


*Pump Head K*

15 04

l/h 04

bar 15

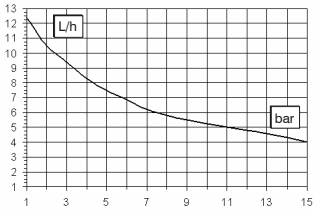


*Pump Head K*

15 02

l/h 02

bar 15

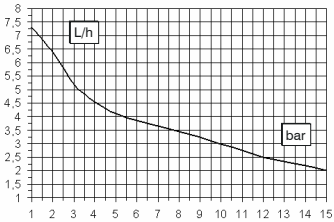


*Pump Head K*

10 10

l/h 10

bar 10

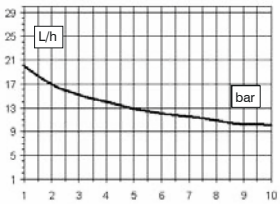


*Pump Head K*

10 05

l/h 05

bar 10

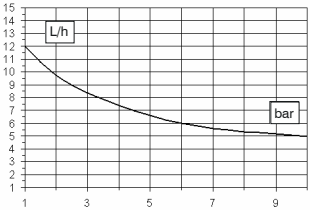


*Pump Head K*

10 04

l/h 04

bar 10

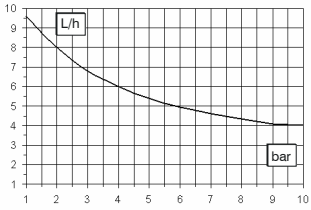

*Pump head* K

07 06

l/h 06

bar 07

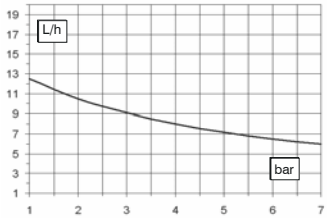


*Pump head* K

05 10

l/h 10

bar 05

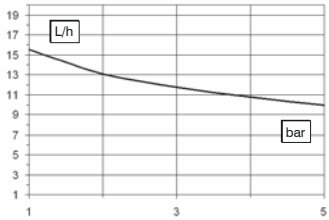


*Pump head* K

05 01

l/h 01

bar 05

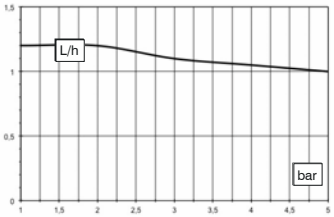


*Pump head* K

05 12

l/h 12

bar 05

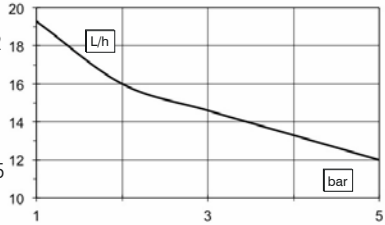


*Pump head* K

04 08

l/h 08

bar 04

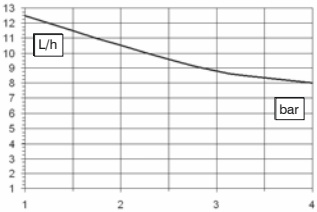


*Pump head* K

03 10

l/h 10

bar 03

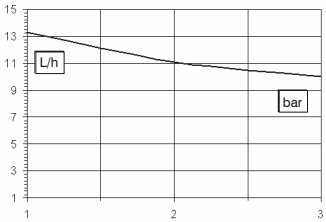


*Pump head* K

02 15

l/h 15

bar 02

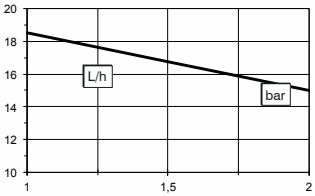


*Pump head* K

01 16

l/h 16

bar 01

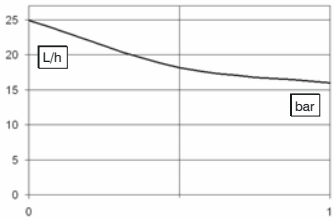


*Flow rate indicated is for $H_2O$ at 20°C at the rated pressure.*
*Dosing accuracy ± 2% at constant pressure ± 0,5 bar.*

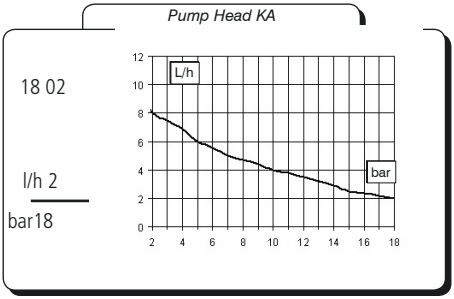
Pump Head KA
18 02
l/h 2
bar18
L/h
bar

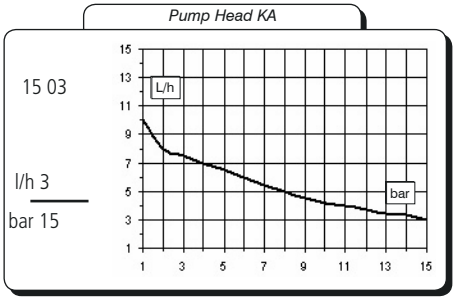
Pump Head KA
15 03
l/h 3
bar 15
L/h
bar

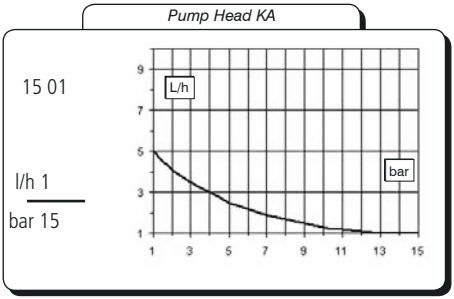
Pump Head KA
15 01
l/h 1
bar 15
L/h
bar

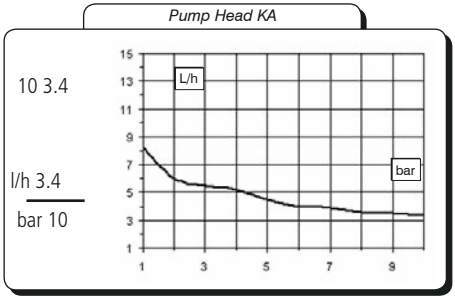
Pump Head KA
10 3.4
l/h 3.4
bar 10
L/h
bar

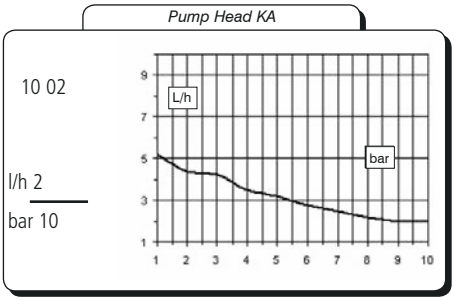
Pump Head KA
10 02
l/h 2
bar 10
L/h
bar

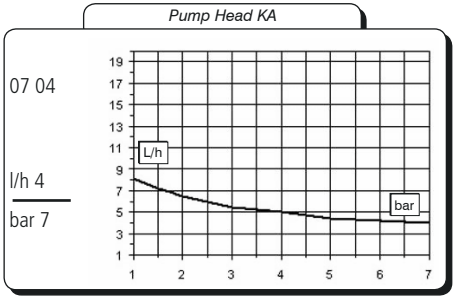
Pump Head KA
07 04
l/h 4
bar 7
L/h
bar

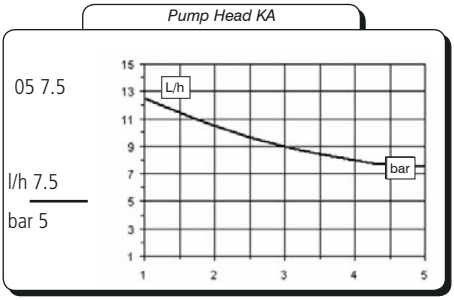
Pump Head KA
05 7.5
l/h 7.5
bar 5
L/h
bar

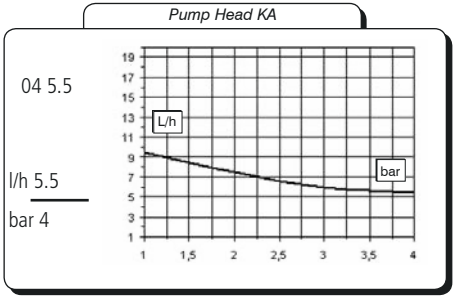
Pump Head KA
04 5.5
l/h 5.5
bar 4
L/h
bar

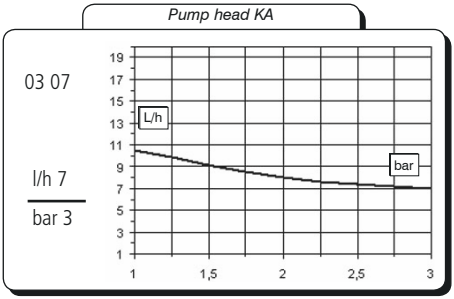


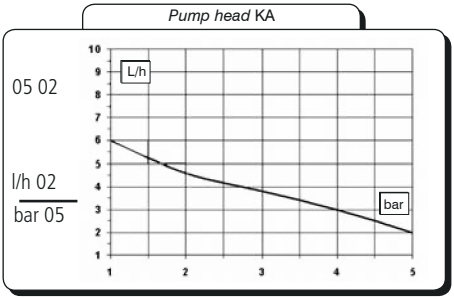


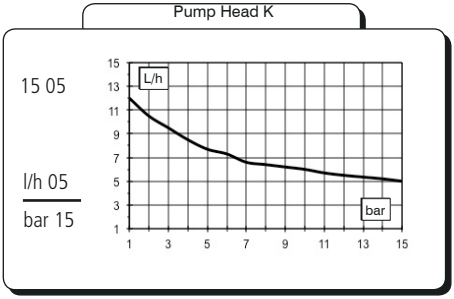


*Flow rate indicated is for $H_2O$ at 20°C at the rated pressure. Dosing accuracy ± 2% at constant pressure ± 0,5 bar.*

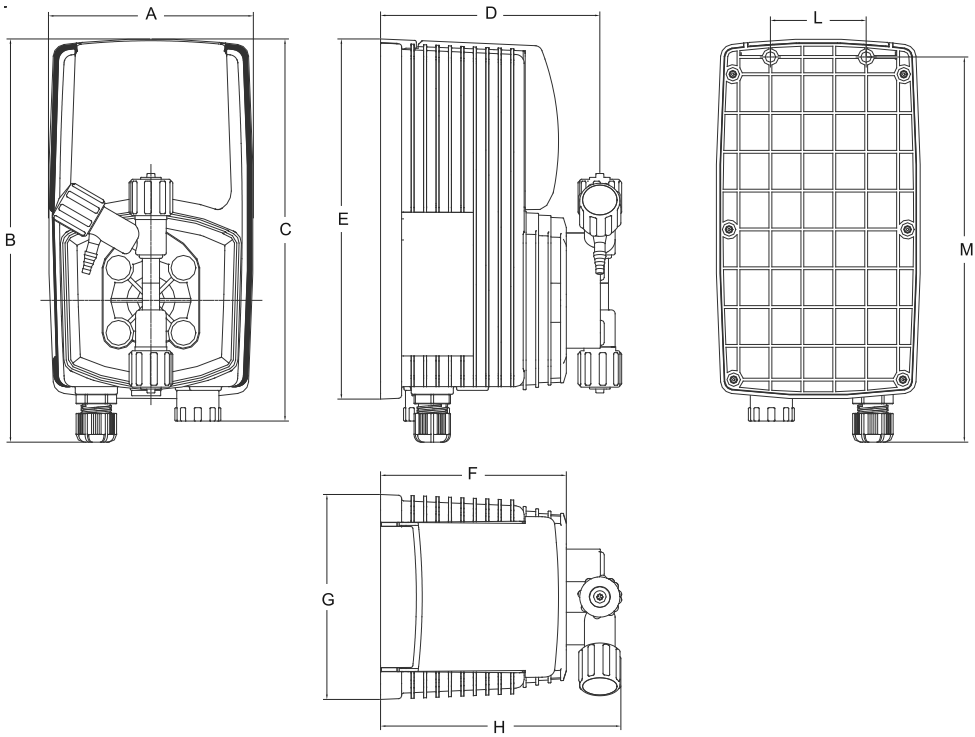


| DIMENSIONS | | |
|---|---|---|
| | *mm* | *inches* |
| *A* | 106.96 | 4.21 |
| *B* | 210.44 | 8.28 |
| *C* | 199.44 | 7.85 |
| *D* | 114.50 | 4.50 |
| *E* | 187.96 | 7.40 |
| *F* | 97.00 | 3.81 |
| *G* | 106.96 | 4.21 |
| *H* | 125.47 | 4.93 |
| *L* | 50.00 | 1.96 |

# E Appendix. Chemical Compatibility Table

Chemical compatibility table

Solenoid driven metering pumps are widely used to dose chemical fluids and it is important that the most suitable material in contact with fluid is selected for each application. This compatibility table serves as a useful help in this respect. All the informations in this list are verified periodically and believed to be correct on the date of issuance. All the informations in this list are based on manufacturer's data and its own experience but since the resistance of any material depends by several factors this list is supplied only as an initial guide, in no way manufacturer makes warranties of any matter respect to the informations provided in this list.

Tab. 1. Chemical compatibility table.

| Product | Formula | Ceram. | PVDF | PP | PVC | SS 316 | PMMA | Hastel. | PTFE | FPM | EPDM | NBR | PE |
|---|---|---|---|---|---|---|---|---|---|---|---|---|---|
| Acetic Acid, Max 75% | CH3COOH | 2 | 1 | 1 | 1 | 1 | 3 | 1 | 1 | 3 | 1 | 3 | 1 |
| Hydrochloric Acid, Concentrate | HCl | 1 | 1 | 1 | 1 | 3 | 1 | 1 | 1 | 1 | 3 | 3 | 1 |
| Hydrofluoric Acid 40% | H2F2 | 3 | 1 | 3 | 2 | 3 | 3 | 2 | 1 | 1 | 3 | 3 | 1 |
| Phosphoric Acid, 50% | H3PO4 | 1 | 1 | 1 | 1 | 2 | 1 | 1 | 1 | 1 | 1 | 3 | 1 |
| Nitric Acid, 65% | HNO3 | 1 | 1 | 2 | 3 | 2 | 3 | 1 | 1 | 1 | 3 | 3 | 2 |
| Sulphuric Acid, 85% | H2SO4 | 1 | 1 | 1 | 1 | 2 | 3 | 1 | 1 | 1 | 3 | 3 | 1 |
| Sulphuric Acid, 98.5% | H2SO4 | 1 | 1 | 3 | 3 | 3 | 3 | 1 | 1 | 1 | 3 | 3 | 3 |
| Amines | R-NH2 | 1 | 2 | 1 | 3 | 1 | - | 1 | 1 | 3 | 3 | 1 | 1 |
| Sodium Bisulphite | NaHSO3 | 1 | 1 | 1 | 1 | 2 | 1 | 1 | 1 | 1 | 1 | 1 | 1 |
| Sodium Carbonate (Soda) | Na2CO3 | 2 | 1 | 1 | 1 | 1 | 1 | 1 | 1 | 2 | 1 | 1 | 1 |
| Ferric Chloride | FeCl3 | 1 | 1 | 1 | 1 | 3 | 1 | 1 | 1 | 1 | 1 | 1 | 1 |
| Calcium Hydroxide (Slaked Lime) | Ca(OH)2 | 1 | 1 | 1 | 1 | 1 | 1 | 1 | 1 | 1 | 1 | 1 | 1 |
| Sodium Hydroxide (Caustic Soda) | NaOH | 2 | 3 | 1 | 1 | 1 | 1 | 1 | 1 | 2 | 1 | 2 | 1 |
| [1] Calcium Hypochlor.(Chlor. ted Lime) | Ca(OCl)2 | 1 | 1 | 1 | 1 | 3 | 1 | 1 | 1 | 1 | 1 | 3 | 1 |
| Sodium Hypochlorite, 12.5% | NaOCl + NaCl | 1 | 1 | 2 | 1 | 3 | 1 | 1 | 1 | 1 | 1 | 2 | 3 |
| Potassium Permanganate, 10% | KMnO4 | 1 | 1 | 1 | 1 | 1 | 1 | 1 | 1 | 1 | 1 | 3 | 1 |
| Hydrogen Peroxide, 30% (Perydrol) | H2O2 | 1 | 1 | 1 | 1 | 1 | 3 | 1 | 1 | 1 | 3 | 3 | 1 |
| Aluminium Sulphate | Al2(SO4)3 | 1 | 1 | 1 | 1 | 1 | 1 | 1 | 1 | 1 | 1 | 1 | 1 |
| Copper-II-Sulphate (Roman Vitriol) | CuSO4 | 1 | 1 | 1 | 1 | 1 | 1 | 1 | 1 | 1 | 1 | 1 | 1 |

[1] Calcium Hypochlor.(Chlor.ted Lime): WQA test was based on 1% Calcium Hypochlorite solution.

1 - Good resistance rating
2 - Fairly resistance rating
3- Not resistant

Materials

Polyvinyldene fluoride (PVDF) .....Pump heads, Valves, Fittings
Polypropylene (PP).....Pump heads, Valves, Fittings
PVC .....Pump heads
Stainless steel (SS 316).....Pump heads, Valves
Polymethyl Metacrilate Acrylic (PMMA) ...Pump heads
Polytetrafluoroethylene (PTFE) .....Diaphragm
Fluorocarbon (FPM).....O-ring
Ethylene propylene (EPDM).....O-ring
Nitrile (NBR).....O-ring

NOTICE: always specify the pump’s label when ordering spare parts.

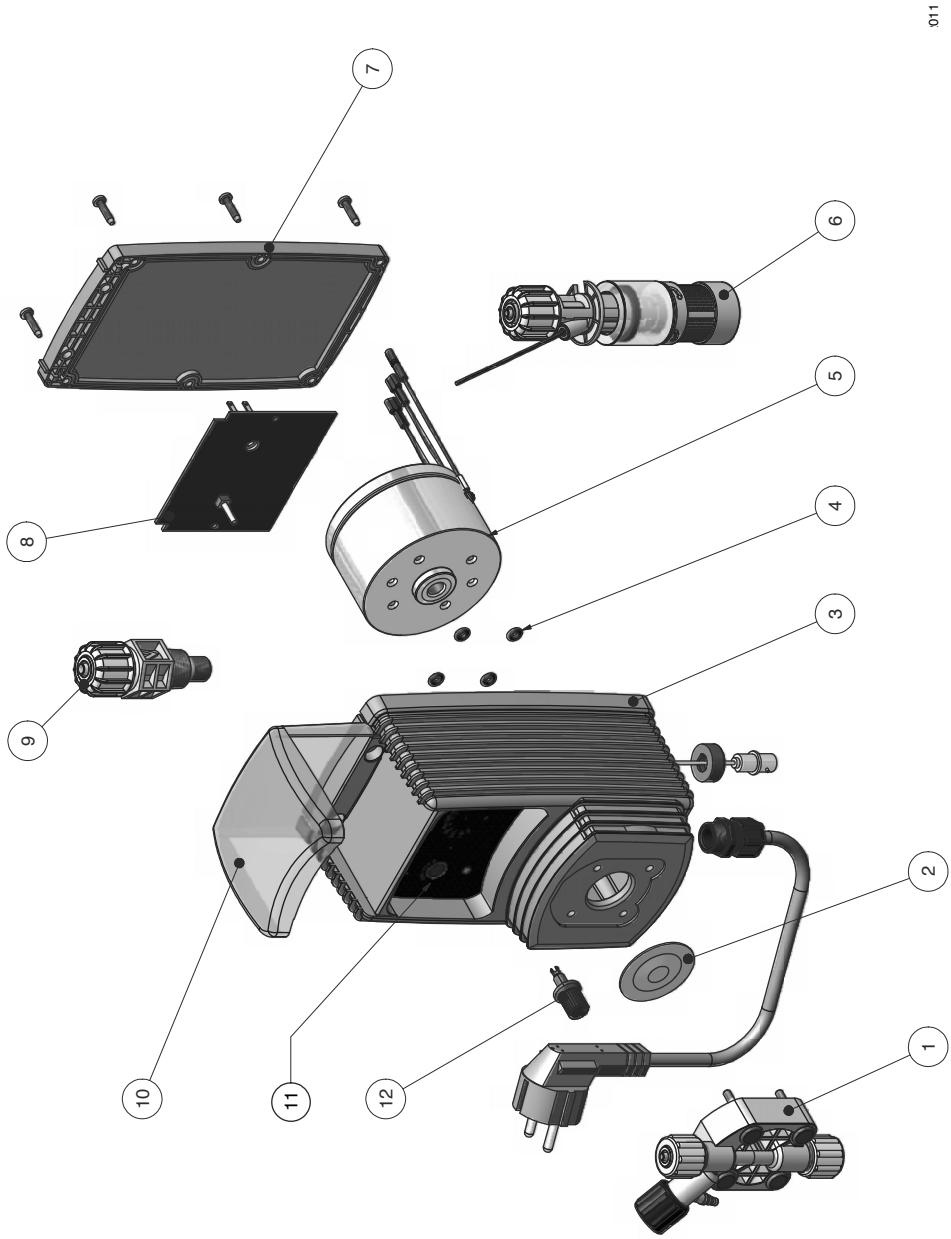

**PRODUCT SERVICE REPAIR FORM**

ENCLOSE THE PRESENT FORM TO THE DELIVERY NOTE

**DATE** .....

**SENDER**

Company name.....

Address .....

Phone no. .....

Contact person.....

**PRODUCT TYPE (see product label)**

DEVICE CODE .....

S/N (serial number).....

**OPERATING CONDITIONS**

Location/installation description .....

.....

Chemical .....

Start-up (date) ..... Running time (approx. hours).....

REMOVE ALL THE LIQUID INTO THE PUMP HEAD AND DRY IT BEFORE PACKAGING IN ITS ORIGINAL BOX.

**DESCRIPTION OF PROBLEM**

☐ MECHANICAL

- Wear parts.....
- Brekage/other damages .....
- Corrosion.....
- Other.....

☐ ELECTRICAL

- Connections, connector, cables .....
- Operating controls (keyboard, display, etc.) .....
- Elettronics.....
- Other.....

☐ LEAKS

- Connections.....
- Pump head .....

☐ NOT OR INADEQUATE FUNCTION/OTHER

.....

.....

.....

**I declare that the dosing pump is free of any hazardous chemical.**

Signature of the compiler

Company stamp

# Summary

1. Introduction ..... 3
2. Unpacking ..... 4
3. General description ..... 5
4. Before to Install warnings ..... 6
5. Installation draw ..... 7
6. Hydraulic Installation ..... 8
7. Pump head ..... 10
7.1 Self venting pump head ..... 11
7. Electrical installation ..... 12
8. Models ..... 14
9. Priming ..... 17
10. Troubleshooting ..... 18
11. Fuse and main board replacement ..... 19
12. Main board ..... 20
A Appendix. Maintenance and chemicals concentration. ..... 21
B Appendix. Construction Materials and Technical info ..... 22
C Appendix. Delivery Curves ..... 23
C Appendix. Delivery Curves ..... 24
C Appendix. Delivery Curves (Self Venting) ..... 25
D Appendix. Dimensions ..... 27
E Appendix. Chemical Compatibility Table ..... 28
G Appendix. “V” series pump exploded view ..... 29
H Appendix. Summary ..... 31

Technical features and drawings are subject to changes and modifications without any advice.

## PRECAUTIONS RELATING TO DIRECTIVES, REGULATIONS AND STANDARDS

### § CE/EU and UKCA marking

We guarantees that this product meets the essential requirements of the applicable Directives and Regulations based on the following specifications. Please carefully consider the following specifications for use of the product in European Union member countries and the United Kingdom.

**• CE/EU harmonized directives and standards**

**Directives**
DIRECTIVE 2006/42/EC
DIRECTIVE 2014/35/EU
DIRECTIVE 2014/30/EU
DIRECTIVE 2011/65/EU
DELEGATED DIRECTIVE (EU) 2015/863

**Harmonized standards**
EN ISO 12100
EN 809
EN ISO 20361
EN IEC 61326-1
EN 61010-1
EN IEC 63000

**• UKCA harmonized regulations and standards**

**Regulations**
2008 No. 1597
2008 2016 No. 1091
2016 No. 1101
2012 No. 3032

**Harmonized standards**
BS EN ISO 12100
BS EN 809
BS EN ISO 20361
BS EN IEC 61326-1
BS EN 61010-1
BS EN IEC 63000

**Disposal of end-of-life equipment by users**

This symbol warns you not to dispose of the product with normal waste. Respect human health and the environment by giving the discarded equipment to a designated collection center for the recycling of electronic and electrical equipment. For more information visit the online site.

When dismantling a pump please separate material types and send them according to local recycling disposal requirements. We appreciate your efforts in supporting your local Recycle Environmental Program. Working together we'll form an active union to assure the world's invaluable resources are conserved.