R990525

TMS MF - TMSA MF - T AC MF

PRODUCT LABEL

TMS MF

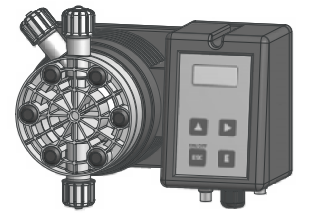

TMSA MF

T AC MF

SOLENOID DRIVEN METERING PUMPS
WITH DIAPHRAGM

EN

OPERATING MANUAL

This operating instructions contains safety information that if ignored can endanger life or result in serious injury.

Read these instructions **carefully** before use and keep them for future reference. Original instruction.

Information and specifications on this manual could be uncorrect or could have printing errors.
Specifications are subject to change without notice.

Version: R1-09-15

Product Description
Descrizione Prodotto

Electromagnetic dosing pump, T and TMS series
Pompa dosatrice elettromagnetiche, serie T e TMS

Product Identification Codes
(the "_" symbols complete the product code based on the configuration of the variants)
Codici Identificativi Prodotto
(i simboli "_" completano il codice del prodotto in base alla configurazione delle varianti)

TAA _____	TIC _____	TAF _____
TAL _____	TIS _____	TAM _____
TAM _____	TOA _____	TAR _____
TAO _____	TPM _____	TDC _____
TAS _____	TPV _____	TFF _____
TAV _____	TSA _____	TMF _____
TAX _____	TSM _____	TMP _____
TCA _____	TTD _____	TPH _____
TCO _____	TVM _____	TRH _____
TCC _____	TAD _____	

GENERAL SAFETY GUIDELINES

Operating, installing, or maintaining the unit in any way that is not covered in this manual could cause death, serious personal injury, or damage to the equipment.

ICON

This manual use the following safety message icon:

Warning!
Indicates a hazardous situation which, if not avoided, will result in death or serious injury.

Warning!
Indicates a hazardous situation which, if not avoided, could result in death or serious injury.

Important - A practice not related to personal injury or additional information.

Cross reference - An instance which refers to related information elsewhere in the same document.

AC - Alternating current

Protective earth

DC - Direct current

Stand-by

PURPOSE OF USE AND SAFETY

METERING PUMP IS INTENDED FOR CHEMICAL DOSING AND DRINKING WATER TREATMENT.

Do not use in explosive area (EX).
Do not use with flammable chemical .
Do not use with radioactive chemicals.

Use after a proper installation.

Use the pump in accordance with the data and specifications printed on the label

Do not modify or use in a manner inconsistent with the provisions of the operating manual.

Keep the pump protected from sun and water. Avoid water splashes.

In emergencies the pump should be switched off immediately. Disconnect the power cable from the power supply.

When using pump with aggressive chemicals observe the regulations concerning the transport and storage of aggressive fluids.

When installing always observe national regulations.

Manufacturer is not liable for any unauthorized use or misuse of this product that may cause injury, damage to persons or materials.

Pump must be accessible at all times for both operating and servicing. Access must not be obstructed in any way.

Feeder should be interlocked with a no-flow protection device to automatically shut-off the pumps when there is no flow!

Adequate measures shall be taken to prevent cross connection of chemicals!

Chemical feeding must be stopped during backwash cycles and periods of noflow as these conditions may introduce the potential for chemical overdosing. Not doing so may result in elevated chemical concentrations and hazerdous gas introduction into the pool or spa.

Pump and accessories must be serviced and repaired by qualified and authorized personnel only.

Before any operation:
- **always read chemical Material Safety Data Sheet (MSDS);**
- **always wear protective clothing;**
- **always discharge the liquid end before servicing the pump.**
- **empty and rinse the liquid end before work on a pump which has been used with hazardous or unknown chemicals.**

This equipment requires regular maintenance to ensure potability requirements of the water and maintenance of improvements as declared by the manufaturer.

ENVIRONMENTAL SAFETY

Work area
Always keep the pump area clean to avoid and/or discover emissions.

Recycling guidelines

EWC code: 16 02 14

Always recycle according to these guidelines:
1. If the unit or parts are accepted by an authorized recycling company, then follow local recycling laws and regulations.
2. If the unit or parts are not accepted by an authorized recycling company, then return them to the nearest representative.

Waste and emissions regulations
Observe these safety regulations regarding waste and emissions:
- Dispose appropriately of all waste.
- Handle and dispose of the dosed chemical in compliance with applicable environmental regulations.
- Clean up all spills in accordance with safety and environmental procedures.
- Report all environmental emissions to the appropriate authorities.

LABELS

Fig. 1. Product label.

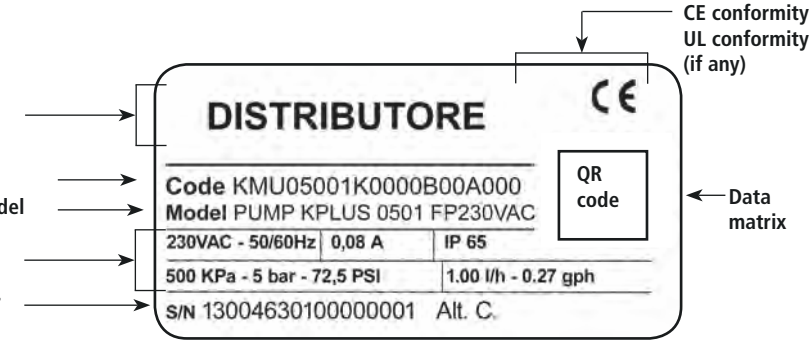

Spare parts

For spare parts orders or any other communication, refer to product label.
Code (CODE) and serial number (S / N) uniquely identify the pump.

Transportation and storage

A not suitable transportation or storage can cause damages.

Use origianal box to pack the pump.

Observe storage conditions also for transportation.

Although packed, always protect the unit against humidity and the action of chemicals.

Before return the dosing pump to the manufacturer Repair service, drain the chemical from pump head and rinse it. Refer to **Shutdown procedure.**

Fill the PRODUCT SERVICE REPAIR FORM and send it with the dosing pump.
Repair service is not accepted if PRODUCT SERVICE REPAIR FORM is missing.

DO NOT TRASH PACKAGING. USE IT TO RETURN THE PUMP.

Transportation and storage temperature ..... 10 / 50°C (32 / 122°F)
Umidity ..... 95% relative humidity (not condensed)

INTRODUCTION

TMS MF

TMS MF is designed for low/middle dosing of chemicals.
The pump has different working modes: Constant, Divide, Multiply, ppm, perc, mlq, batch, volt, mA.
Morover, you can:
- set AUTOMATIC REPRIMING, with a flow sensor installed (Sefl menu
- set STROKES RECOVERY SYSTEM, with a flow sensor installed (Sefl menu
- set UPKEEP DOSING MODE in a plant shutdown situation (Ppm menu - upkeep);
- set WORK-PAUSE MODE: cyclic dosing controlled by an external contact.

Pumps have got:
- STAND-BY input
- SEFL (flow sensor) inpu
- LEVEL (level control) input
- ALARM contact output.

Flow rate is determined by the stroke length and by the stroke speed. The stroke length is adjustable from 0 to 100% using the stroke length adjustment knob. However dosing accuracy is guarantee within an adjustment range from 30% to 100%.

All control and setup parameters are available through a digital keyboard and they are displayed on a LCD backlit display.

Some functions described into this manual may need accessories not included into the pump packaging.

TMSA MF

TMSA MF is the TMS MF version with **self-venting pump head**.
Self-venting pump head must be used when using chemicals that produce gas (i.e. hydrogen peroxide, ammonium, sodium hypoclorite at particular conditions).
For connections ⎘ "**Self-Venting pump head installation".**

TMS AC MF

TMS AC MF is the TMS MF version with **double supply: compressed air and power supply.**
Compressed air without lubrifiant and/or condensed ater.
Air supply pressure range must be from 6 to 10 bar.
For connections ⎘ fig 1.

Unpacking

n. 4	Dibbles ø6
n. 4	Self tapping screws 4,5 x 40
n. 1	Delayed fuse 5 X 20
n. 1	Level probe with axial foot filter (PVDF
n. 1	0,3 bar injection valve (PVDF)
mt 2	Delivery pipe* (PVDF)
mt 2	Suction pipe* (PVC)
mt 2	Venting pipe (PVC 4x6)
mt 2	Signal cable for "Stand-by" and "Alarm"
mt 2,5	External signal cable
n.1	Operating manual

* If hose is 6x8 there is only a 4meters long hose. Cut to obtain suction and delivery hoses.

Fig. 3. TMS MF - TMSA MF

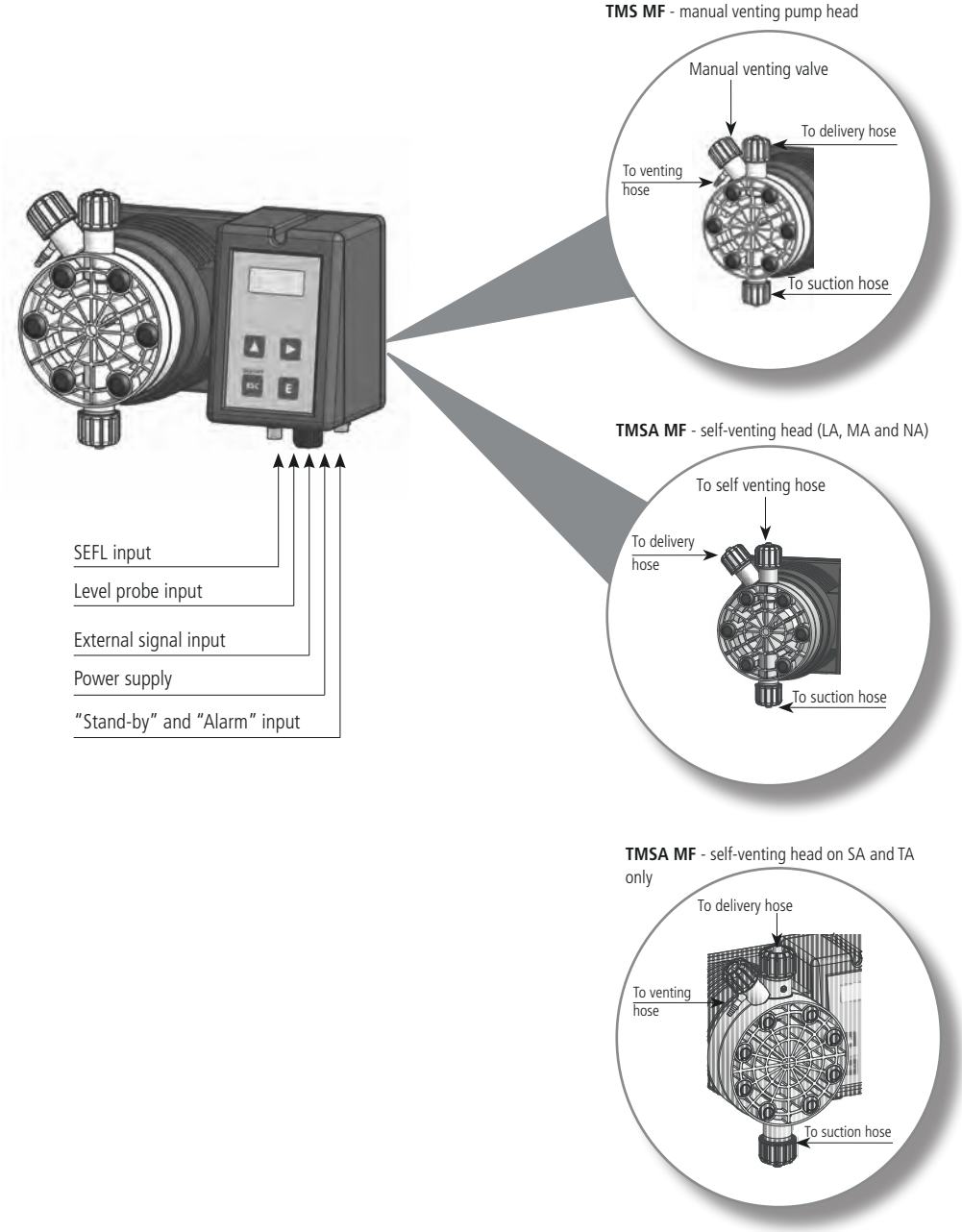

Fig. 4. TMS AC MF

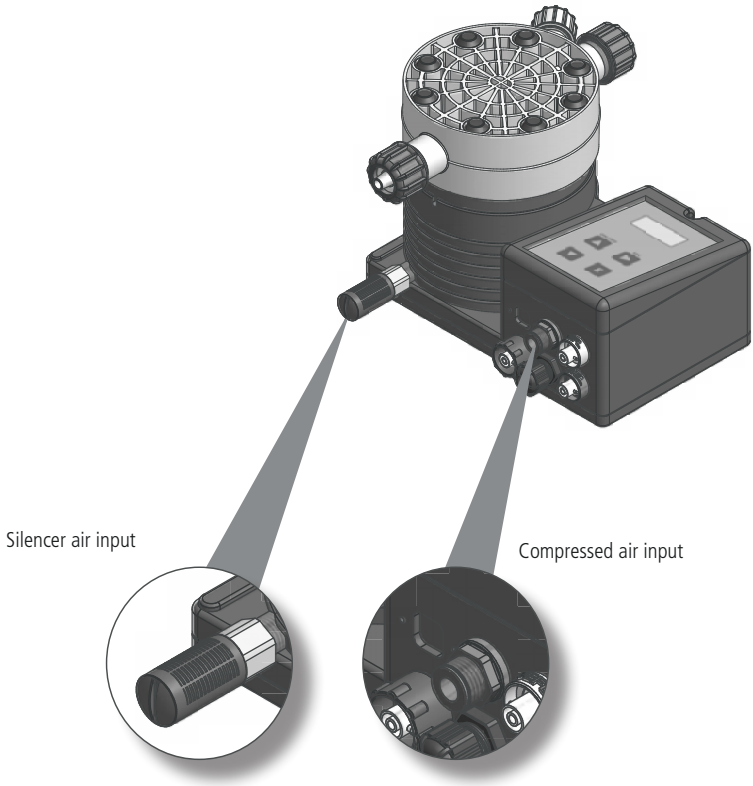

Compressed air without lubrifiant and/or condensed ater. Air supply pressure range must be from 6 to 10 bar.

Technical and electrical features

POWER SUPPLY	FREQ.	FUSE	
		110 Solenoid diam.	80 Solenoid diam.
230 VAC (180-270 VAC)	50/60 Hz	630 mA (500 mA if UL)	1,25 A
115 VAC (90-135 VAC)	50/60 Hz	1 A	630 mA
24 VAC (20-32 VAC)	50/60 Hz	6,3 A	2 A
12 VDC (10-16 VDC)		6,3 A	5 A

Pump Strokes.....0 / 120
Suction Height .....1,5 metres (5ft)

Environment Temperature:.....0 / 45°C (32 / 113°F)
Chemical Temperature:.....0 / 50°C (32 / 122°F)
Packaging and Transporting Temperature: ...-10 / 50°C (14 / 122°F)

Altitude.....2000 m
Installation Class:.....II

Audible Noise .....TMS/TMSA: 62.0 db(A); silenced: 59.0 db(A); ultrasilenced: 58.0 db(A);
.....TMS AC: 78,3db(A)

Protection: .....TMS / TMSA: IP 65 (UR working %: 85% at T<=40°C; 70% at
.....T=50°C, non-condensing)
.....TMS AC: IP54

Only compressed air TMS AC models
Compressed air consumption..... 30 l/h (suction air)
Suction air pressure..... 7 bar
Compressed air metering pumps work only with compressed air without lubrificant and/or condensed water.
Air supply pressure range must be from 6 to 10 bar.

Tab. 1. TMS MF and TMSA MF capacities

CAPACITIES													
TMS MF	**Capacity**				**cc / stroke**	**pulse/ min**	**Max pressure**		**Ampere peak (A)**		**Delivery hose (PVDF)**	**Suction hose**	**Pump head**
	min cc/h	max l/h	Min GPH	Max GPH			**bar**	**PSI**	230 VAC	115 VAC			
2005	0,7	5	0,0001	1,32	0,7	120	20	290	1,6	3,2	4 x 6	4 x 6	L
0515	2,1	15	0,0005	3,96	2,1	120	5	73	1,6	3,2	6 x 8	6 x 8	N
0420	2,8	20	0,00074	5,28	2,8	120	4	58	1,6	3,2	6 x 8	6 x 8	N
0330	4,2	30	0,0011	7,93	4,2	120	3	43	1,6	3,2	8 x 10	8 x 12	S
0150	7	50	0,0018	13,2	7	120	1	15	1,6	3,2	8 x 10	8 x 12	S
00100	14	100	0,0037	26,4	14	120	0	0	1,6	3,2	12 x 18 PVC renforced	12 x 18 PVC renforced	T
TMSA MF	**Capacity**				**cc / stroke**	**pulse/ min**	**Max pressure**		**Ampere peak (A)**		**Delivery hose (PVDF)**	**Suction hose**	**Pump head**
	min cc/h	max l/h	Min GPH	Max GPH			**bar**	**PSI**	230 VAC	115 VAC			
203,2	0,44	3,2	0,0001	0,85	0,44	120	20	290	1,6	3,2	4 x 6	4 x 6	LA
0510	1,39	10	0,0004	2,64	1,39	120	5	73	1,6	3,2	6 x 8	6 x 8	NA
0413	1,80	13	0,0005	3,43	1,80	120	4	58	1,6	3,2	6 x 8	6 x 8	NA

Tab. 2. TMS AC MF capacities

CAPACITIES											
TMS AC MF	**Capacity**				**cc / PULSE**		**Max pressure**		**Delivery hose (PVDF)**	**Suction hose**	**Pump head**
	min cc/h	max l/h	Min GPH	Max GPH	**min**	**max**	**bar**	**PSI**			
1050	2.08	50	0.55	13.2	2,1	7	10	145			
05150	20.83	180	5.5	39.6	7,5	25	5	73	13 x 16	12 x 18	T
00230	9.58	230	2.53	60.7	10,8	32	0	0	13 x 16	12 x 18	T

List of materials

✓ : standard
✗: option available

	PVDF	PP	PPV0	PMMA	PVC	PE	CE	GLASS	PTFE	SS	FKM B	EPDM	WAX	SI
BOX		✓	✗											
PUMP HEAD	✓			✗										
DIAPHRAGM									✓					
BALLS							✓	✗	✗	✗				
SUCTION HOSE	✗				✓	✗								
DELIVERY HOSE	✓				✗	✗								
VENTING HOSE	✗				✓	✗								
O RING									✗		✗	✗	✗	✗
LEVEL RPOBE/ FOOT FILTER	✓													
LEVEL PROBE CABLE						✓								

Default parameter

	At startup	After LOAD DEFAULT procedure
PASSWORD	0000	0000
WORKING MODE	mA	CONSTANT
	High mA 20.0: spm 180	100 SPM
	Low mA 0: spm 0	-
CS/ST	Based on capacity (Tab. 1 and 2. cc/stroke)	0
UNIT	litres	litres
SEFL	Enable - SEFL 020 STP YES - Recovery fault NO	Disabled
STAND-BY	Enabled N.O. (normally open)	Disabled
OUT ALARM	Enabled N.O. (normally open)	Enabled N.O. (normally open)
ALARMS	All enabled	All disabled
TIMEOUT	120 sec.	0

INSTALLATION

Metering pump installation

L'installazione e la messa in funzione avviene in 5 fasi:

1. Pump's positioning
2. Piping connection
3. Electrical connection
4. Priming
5. Programming

Before starting installation, ensure to take all precautions for the installer safety.

Wear always protective clothes as masks, gloves, safety glasses, ear plugs or ear muffs, and further security devices during ALL installation procedure and while handling chemicals.

Avoid water splashes and direct sun!

Pump positioning

Fix the pump on a stable support at max **1,5 mt** from the tank bottom.

Injection point must be higher than the chemical tank to avoid accidental product's injections.

If this condition can not be respected, it is necessary to install a **multifunction valve** on the pump's delivery to prevent accidental product's injections.

Instal the pump
- in a safety place and fixed to the support to avoid vibration problems;
- in an easy accessible place;
- with its base in horizontal position.

Use only hoses compatibles with the chemical to dose.
Refer to Chemical compatibility table.
If the chemical is not listed please contact chemical's manufacturer.

Feeder should be interlocked with a no-flow protection device to automatically shut-off the pumps when there is no flow!

Adequate measures shall be taken to prevent cross connection of chemicals!

Chemical feeding must be stopped during backwash cycles and periods of noflow as these conditions may introduce the potential for chemical overdosing. Not doing so may result in elevated chemical concentrations and hazerdous gas introduction into the pool or spa.

Fig. 5. Metering pump installation

1 - Metering pumo
2 - Suction hose
3 - Delivery hose
4 - Injection valve
5 - Air discharge
6 - Level probe
7 - Foot filte
8 - Power supply
9 - Standby / Alarm

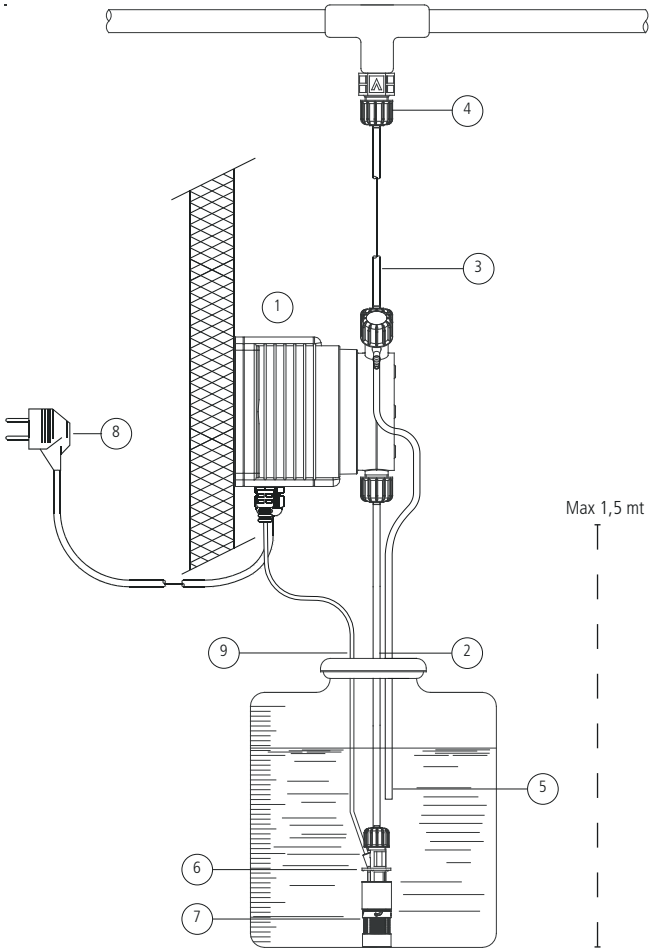

Flow sensor installation (SEFL)

SEFL flow sensor is an **optional device** for control if metering pump is working properly. SEFL checks if the chemical is flowing through the pump head

1. Fix SEFL flow sensor on pump s delivery fitting directly or use the PMMA b acket (option).
2. Ensure firmly delivery hose on the delivery fitting on the top of the SEF
3. Connect the SEFL cable on the pump's SEFL input (**Pump's connections)**.
4. Enable flow sensor on pumps menu PROG 2 SETUP / SEFL.

✳ (asterisk) symbol on display indicates a SEFL is connected to the pump.

Fig. 6. SEFL installed on metering pump.

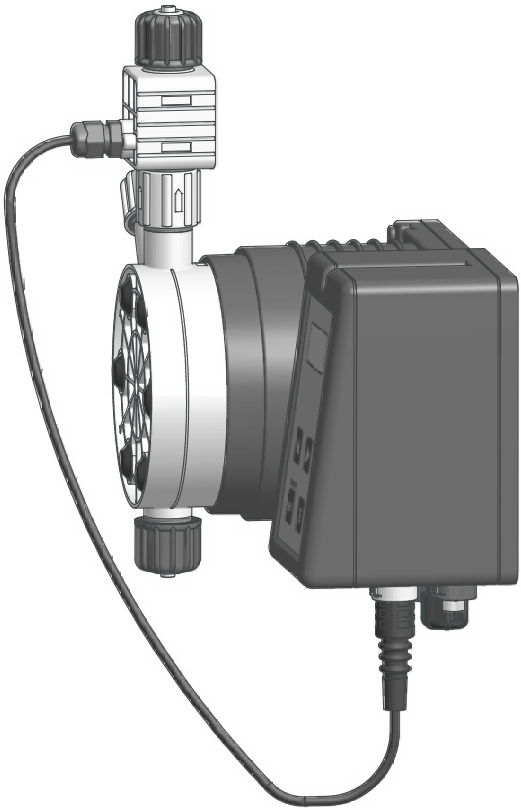

Level probe

Level probe supplied prevents sediments' priming.

Place the level probe on the bottom of the tank.
Connect level probe's BNC to level probe input on the pump.

If there is a mixer in the tank, it is necessary to install a suction lance (option) instead of level probe.

In case of replacement of parts of the level probe, follow the diagram below.

Fig. 7. Foot filter / level probe aasembling

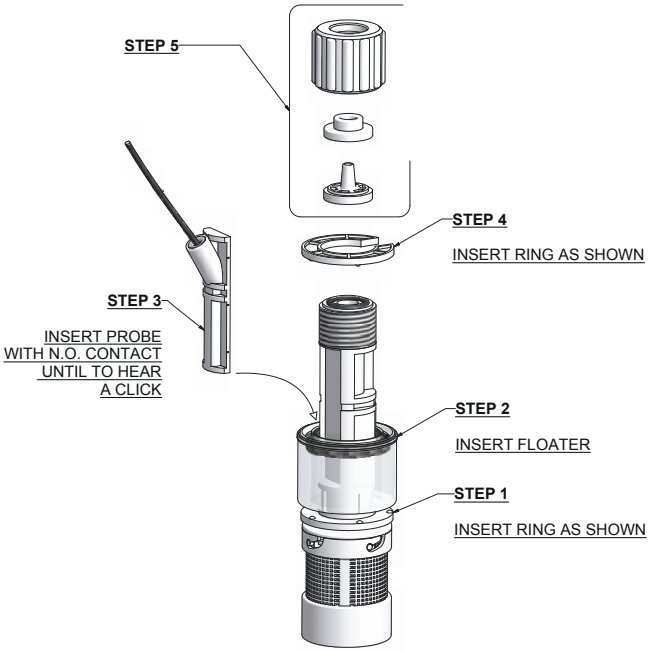

Suction hose / foot filter connection

Suction hose should be as short as possible and installed in vertical position to prevent air bubbles suction!

Completely unscrew tightening nut from pump's head and remove assembling components: tightening nut, holding ring and pipe holder.
Assembly as shown in fig 8.
Insert hose into pipe holder until it reaches the bottom.
Lock hose on pump's head by screwing down the tightening nut. **Use only hands** to do it!
Connect other side of the hose to the foot filter using the same procedur .

Fig. 8. Suction hose / pump head

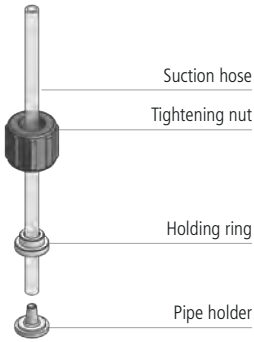

Delivery hose / pump head

Suction and delivery valves must be in VERTICAL POSITION.

All hoses connections must be performed using only hands' force!

No tongs required!

Delivery hose must be firmly fixed to avoid suddenly movements that could damage near objects!

Completely unscrew tightening nut from pump's head and remove assembling components: tightening nut, holding ring and pipe holder.
Assembly as shown in fig 9.
Insert hose into pipe holder until it reaches the bottom.

Fig. 9. Delivery hose / pump head

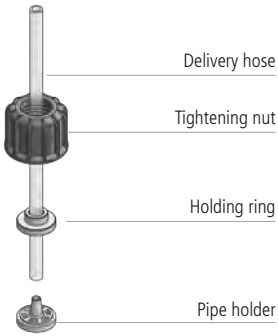

Lock hose on pump's head by screwing down the tightening nut. **Use only hands** to do it!
Connect other side of the hose to the injection valve using the same procedure.

Injection valve

Injection valve must be installed on plant from water's input.
Injection valve will open at pressure greater than 0,3bar.
1, 2, 3, 4 or 5 bar injection valve are available upon request.

Venting hose

Insert one side of venting hose into venting hose fitting

Insert other side of venting hose into chemical's tank.
During priming procedure product exceeding will flow into tank

Fig. 10. Manual venting pump head (TMS MF).

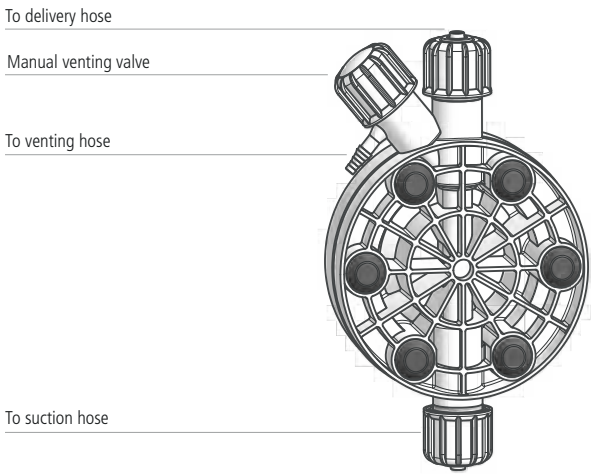

For priming procedure see **Priming**.

It's allowed to lightly bend venting hose.

During calibration procedure ("TEST") insert venting hose into BECKER test-tube.

TMSA MF self venting pump head installation

Self-venting pump head must be used when using chemicals that produce gas (i.e. hydrogen peroxide, ammonium, sodium hypoclorite at particular conditions).
Refer to fig 11-12 for delivery and venting hose.
Hoses assembling procedures are the same described before.

Fig. 11. Self-venting models pump head: LA, MA, NA (TMSA).

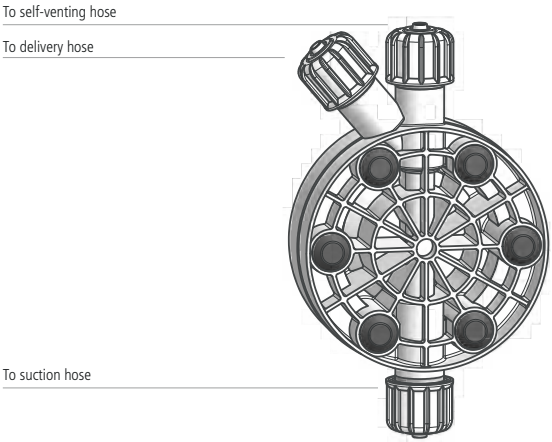

Fig. 12. Self-venting models pump head: SA, TA (TMSA).

ON "SA" AND "TA" MODELS THERE IS A RED THREADING NUT

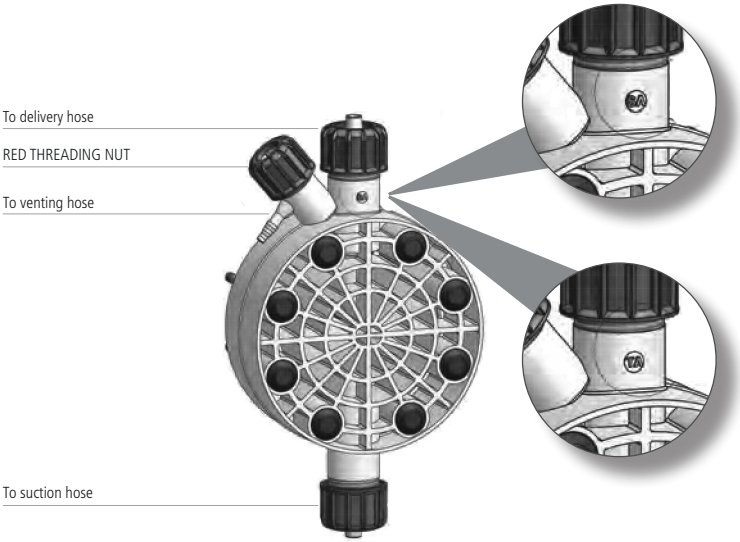

Suction, delivery and venting valves are different.

Preliminary checks

ALL ELECTRICAL CONNECTIONS MUST BE PERFORMED BY AUTHORIZED AND QUALIFIED PERSONNEL ONLY.

Before to proceed:

1. **Verify that pump's label values are compatible with main power supply.** The label is on the pump's side.

2. **Verify that the pump is connected to a plant with a differential switch (0,03A sensitivity) if there isn't a good ground.**

3. **Instal a relais switch to avoid pump's damage.** Do not install the pump in parallel with heavy inductance load (for example: engines**). See fig. below.**

Fig. 13. Electrical installation

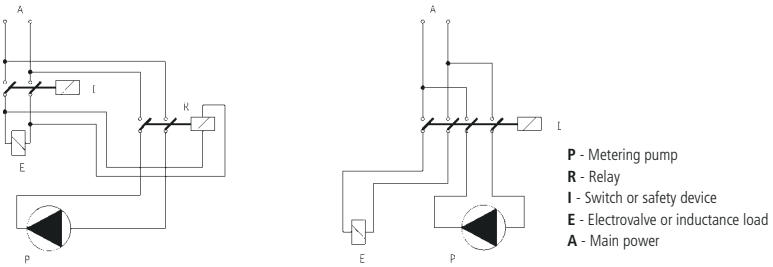

4. **Check the power absorption peak. For 115 or 230 VAC pumps do not use protection type "motor protection".**

Power supply	
12 VDC	connect the pump to a min. 55 Ah-12VDC battery
24 VDC	collegare la pompa ad un alimentatore stabilizzato da almeno 200 W (verificare assorbimento di picco

5. **Verify BNC probe level is connected as described in 5 "Level probe".**

Pump's connections

- Connect external signal "BNC" on pump's "INPUT" connector (-braided shield cable; +center conductor). This input may be used as follows:
  - as pulse sender water meter or
  - as startup contact for "BATCH" mode or
  - as voltage input for "VOLT" mode or
  - as current input for "mA" mode.

- Connect alarm and/or stand-by signal as described below.

"Alarm" signal is not fuse protected.
"Standby" signal has main priority on pump's enabling/disabling.

Fig. 14. Alarm/stand-by connection

1: (Green) "Stand-by" Input
4: (Yellow) "Stand-by" Ground

2: (Brown) Alarm (Relay) Common
3: (White) N.O. Alarm(Relay) Contact

Max load relay output: free contact 1A 24VAC

If not used, protect the mini DIN plug with the black rubber cap loose in the accessories bag.

- Connect "SEFL" flow sensor **option**) to SEFL input.

Fig. 15. Pump's connections

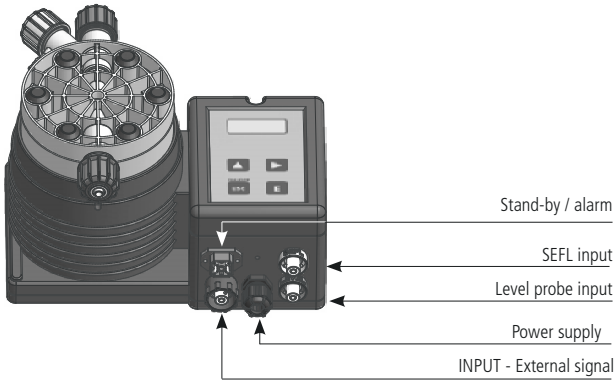

Connect a water meter with Hall effect

The version of metering pump for connection to a water meter HALL effect has a 3-wire external signal input cable.
If the water meter with Hall effect is provided by the manufacturer, it will be provided of a MPM connector for water meter Hall effect. For main board connections refer to **Main board**.

Fig. 16. External signal cable for water meter Hall effect

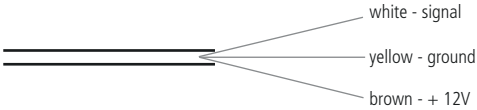

PRIMING

How to prime pump head

Prime pump head as follow:

1. connect all hoses (delivery, suction and venting hoses);
2. open venting valve by completely turning venting knob;
3. supply the pump. If there is a delay set, press any key to skip countdown and enter in **MAIN MENU**.
4. Keep pressed 5 seconds ➧.
5. Pump will go for 30 second into priming mode.
6. When the chemical begins to flow out from the venting hose, then completely close the knob (except for self-venting pump heads).
7. At the end, pump will be ready to work. To skip priming time, press "**ESC**".
8. Proceed to program the pump.

Keyboard

E	ENTER / EXIT (SAVING)
➡	INCREASE / DECREASE DIGITS
⬆	SCROLL / INCREASE DIGITS
ESC	ON/OFF / EXIT (WITHOUT SAVING)

Tab. 3. Legend

FUNCTION	KEY
on / off	ESC
menu enter / exit	E / ↵
save settings	E / ↵
exit without saving	ESC
data settings	⬆
scroll screens	➡
scroll options	⬆

Main menu

Main menu provides pump's summary information:

Tab. 4. Main menu

STROKES	pulses per minute
UPKEEP ENABLED	Upkeep dosing mode (if set)
MODE	Current working mode
SUPPLY	Power supply voltage
DOSING	Current capacity
INPUT (not in Constant and Batch working mode)	external signal value (if Volt or mA working mode) or current plant's capacity (if Multiply, Divide or ppm working mode)

Tab. 5. Symbols

✳	there is a SEFL (flow sensor) connected If SEFL is enabled, ✳ symbol flashes at every pulse, otherwise there may be a fault (**TROUBLESHOOTING GUIDE**).
#	there is an alarm (**ALARMS)**.

Note. When the pump is started for the first time it is necessary to set the navigation language and the unit of measurement.

Enter in programming area

From main menu press E to enter into programming area.
Standard password is: 0000.
Select FULL MENU for first prog amming o for full programming.
Select SHORT MENU to modify parameters only.

SHORT MENU is not available at first programming or after a pump's reset.

Programming menu is divided in:
- PROG 1 MODE: choose **pump's working mode**;
- PROG 2 SETUP: set **working parameters;**
- PROG 3 STAT: consult pump's **statistics**.

PROG 1 MODE: Working mode

Metering pump can be programmed for different working modes (Tab. 6).

Tab. 6. PROG1 MODE: working modes.

MODE	WORKING MODES
CONSTANT	Pump doses at a constant rate set in "SPH" (strokes for hour), "SPM" (strokes for minute) or "LPH" (litres per hour) parameters set during program session.
DIVIDE	External pulses from a water meter are divided by a value set during program session. The pump doses with a rate determined by this parameter.
MULTIPLY	External pulses from a water meter are multiplied by a value set during program session. The pump doses with a rate determined by this parameter.
PPM	Dosing rate is determined by pulses from a water meter on the base of set PPM, chemical product concentration (%) and quantity for each single stroke set during program session.
PERC	Gli impulsi forniti da un contatore connesso alla pompa determinano il dosaggio in funzione del valore PERC (%) impostato. La concentrazione del prodotto dosato e la quantità per singolo colpo deve essere impostato durante la fase di programmazione.
MLQ	Dosing rate is determined by pulses from a water meter on the base of set MLQ (milliliters per quintal), chemical product concentration (%) and quantity for each single stroke set during program session.
BATCH	Signal from an external contact starts the pump to dose the set quantity.
VOLT	Voltage from an external device drives the pump that doses proportionally using a minimum and maximum of strokes for minute set during program session (0/10 VDC).
mA	Current from an external device drives the pump that doses proportionally using a minimum and maximum of strokes for minute set during program session.

In MULTIPLY, DIVIDE, PPM, PERC, MLQ working modes, the pump, connected to a pulse emitter water meter, shows the instant flow. The pump can divide or multiply up to 999 when into these working modes.

CONSTANT

Pump doses at a constant rate set in "SPH" (strokes for hour), "SPM" (strokes for minute), "LPH" (litres per hour) parameters set during program session.

WHEN	To dose regularly a standard quantity of chemical (no external signal).
PARAMETERS	Set: • SPH (stroke per hour) • SPM (stroke per minute) • LPH (litre per hour). LPH accuracy depends on CC/ST value set in set up menu (PROG 2 SETUP). LPH max value depends on the max frequency of the pump (refer to the pump's label). If an higher value is set, the pump will display an alarm # (ALARM STROKE - (**ALARMS**).

Press E to confirm

Fig. 17. Constant menu.

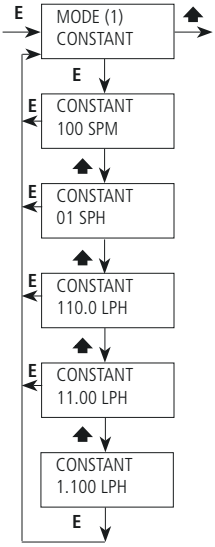

DIVIDE

External pulses from a water meter are divided by a value set during program session. The pump doses with a frequency rate determined by this parameter.

WHEN	An external signal sends too many pulses (small size water meter, ex. CTFI), then it is necessary to divide them to dose the correct quantity of chemical.
PARAMETERS	• DIVIDE (divisor factor). Min value accepted: 001.00.

Fig. 18. Divide menu.

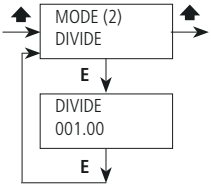

In DIVIDE working modes, the pump, connected to a pulse emitter water meter, shows the instant flo .

Calculate the division value

Use the following formula:

$$\frac{[imp/l] \times [cc]}{[ppm] \times [K]} \times 1000 = N$$

N	Division value to set
[imp/l]	pulses/liter from pulse sender water meter
[cc]	single injection quantity of dosing pump
[ppm]	part per millions product quantity to dose (gr/m^3)
[K]	product dilution coefficient

If obtained "N" is < 1 then install a pulse sender water meter that produces more pulses. Otherwise use the "MULTIPLY" mode and multiply for 1/N. It's also possible to fix the problem trying to decrease product dilution. If dosed quantity is greater than the needed one, increase division factor (N).

MULTIPLY

External pulses from a water meter are multiplied by a value set during program session. The pump doses with a frequency rate determined by this parameter.

WHEN	An external signal sends too many pulses (big size water meter, ex. CWFA), then it is necessary to multiply them to dose the correct quantity of chemical
PARAMETERS	• MULTIPLY (multiplication factor). Min value accepted: 001.00. • TIMEOUT (working parameter set in PROG 2 SETUP)

Fig. 19. Multiply menu.

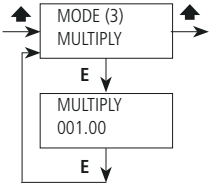

In MULTIPLY working modes, the pump, connected to a pulse emitter water meter, shows the instant flo .

Calculate the multiplication value

Use the following formula:

$$\frac{[ppm] \times [K]}{[imp/l] \times [cc] \times 1000} = N$$

N	Multiplication value to set
[imp/l]	pulses/liter from pulse sender water meter
[cc]	single injection quantity of dosing pump
[ppm]	part per millions product quantity to dose (gr/m^3)
[K]	product dilution coefficient

If obtained "N" is < 1 then install a pulse sender water meter that produces less pulses. Otherwise use the "DIVIDE" mode and multiply for 1/N. It's also possible to fix the problem trying to decrease product dilution.

PPM

Dosing rate is determined by pulses from a water meter, PPM, chemical product (%) concentration and quantity for each single stroke set during program session.

WHEN	This mode is useful using an external signal from a pulse sender water meter and it's necessary to specify only PPM (parts per million) and product concentration, leaving the pump to manage coming pulses.
PARAMETERS	• PPM (parts per million product quantity) • CONC (% of product's concentration) • UPKEEP (upkeep dosing mode) • WMETER (Water meter pulses - working parameter set in PROG 2 SETUP) • CC/ST (cc/pulse - working parameter set in PROG 2 SETUP) • TIMEOUT (working parameter set in PROG 2 SETUP)

Fig. 20. PPM menu.

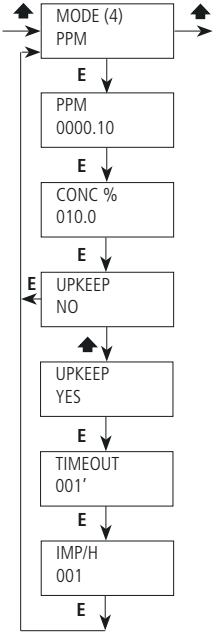

In PPM working modes, the pump, connected to a pulse emitter water meter, shows the instant flo .

Upkeep working mode

If there is a plant shutdown, pump can perform a maintenance dosing.
To activate this function set:

- "UPKEEP YES" (upkeep working mode is active);
- "TIMEOUT" (time after which, in absence of pulses, the pump start the maintenance dosing);
- "IMP/H" (pulses/hour to provide in upkeep working mode).

PERC

Dosing rate is determined by pulses from a water meter, percentage (%), chemical product concentration and quantity for each single stroke set during programming.

WHEN	This mode is useful using an external signal from a pulse sender water meter and it's necessary to specify only % , leaving the pump to manage coming pulses.
PARAMETERS	• PERC (percentual product to dose) • CONC (% product concentration: 100% pure) • WMETER (water meter pulses - working parameter set in PROG 2 SETUP) • CC/ST (cc/pulse - working parameter set in PROG 2 SETUP) • TIMEOUT (working parameter set in PROG 2 SETUP)

Fig. 21. PERC menu.

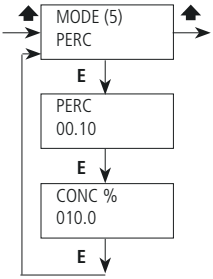

In PERC working modes, the pump, connected to a pulse emitter water meter, shows the instant flo .

Choosing a water meter

Use a water meter to reach its maximum pulsating capabilities.
Note: maximum frequency for this pump is 1Khz (1000 pulses per second).

MLQ

Dosing rate is determined by pulses from a water meter on the base of set MLQ (milliliters per quintal), chemical product concentration (%) and quantity for each single stroke set during program session.

WHEN	This mode is useful when with an external signal from a pulse sender (as a water meter), it is necessary to dose the product quantity set specifing the MLQ (milliliters per quintal) and leaving the pump to manage the coming pulses.
PARAMETERS	• MLQ (product quantity in milliliters per quintal) • CONC (% product concentration: 100% pure) • WMETER (water meter pulses - working parameter set in PROG 2 SETUP) • CC/ST (cc/pulse - working parameter set in PROG 2 SETUP) • TIMEOUT (working parameter set in PROG 2 SETUP)

Fig. 22. MLQ menu

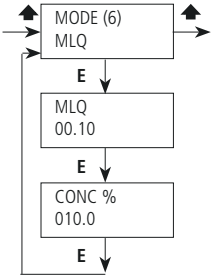

In MLQ working modes, the pump, connected to a pulse emitter water meter, shows the instant flo .

BATCH

Signal from an external contact starts the pump to dose product or to produce an amount of strokes set during program session.
For best result, calibrate the pump carefully (test - PROG 2 SETUP menu).

WHEN	This function allows to start dosing after pump receives an external signal.
PARAMETERS	• MODE (external, manual or internal, see below) • CC (product's quantity to dose) • ST (amount of strokes) • CONTACT (contact status: open or closed or disabled) • CC/ST (cc/pulse - working parameter set in PROG 2 SETUP)

Fig. 23. Menù BATCH

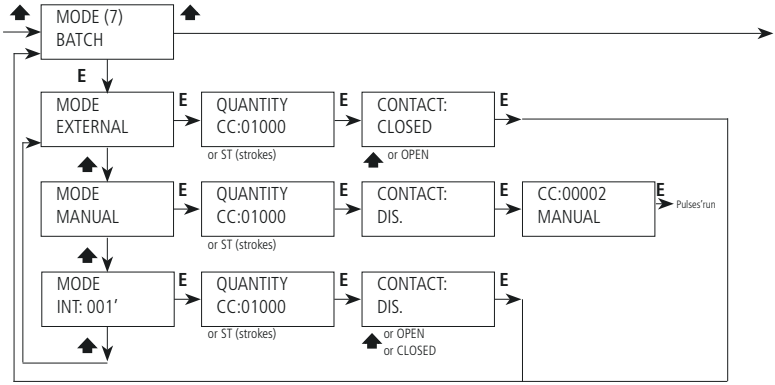

EXTERNAL: an external signal regulates dosing

An external contact (N.O. or N.C.) starts the dosing at max frequency the set quantity ("CC") or the set strokes'number ("ST").

EXAMPLE 1

Set:

Any change in contact's status starts the dosing of the set strokes' number.

Fig. 24. Batch -external mode- contact's status and pump working mode

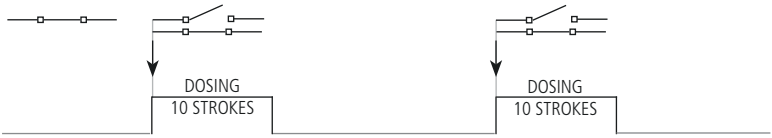

MANUAL: manual dosing

Manual dosing mode is used for prime the pump head. Set a quantity to dose at max frequency ("CC") or the tsroke's number ("ST"). Contact is disabled.

EXAMPLE 2

Set:

Pump doses the set quantity .

Fig. 25. Batch -mode manual- pump working mode

INTERNAL: work-pause cycle

In this working dose, you set:
- quantity to dose at max frequency;
- interval between dosings ("INT": 1 to 999 minutes);
- contact status (open or closed or disabled).

Is thus estabilished a work-pause cycle regulated by an external contact (N.C.-N.O.).
Changing contact's status, pump waits (WAITING).
If contact is disabled, work-pause cycle will repeat regularly until pump is powered.

EXAMPLE 3

Set:

Pump doses in a constant pause-work cycle:

Fig. 26. Batch -mode internal

EXAMPLE 4

Set:

Pump doses in a constant pause-work cycle. Change in contact status stop the cycle (Open → Closed)
Cycle starts with the pause.

Fig. 28. Batch -mode internal- working mode with pause-work cycle regulated by an external contact. Case 1.

Case 1: contact changes its status during pump's pause.
When contact go back to its previous status, the pump return to normal operation.

Fig. 27. Batch -mode internal- working mode with pause-work cycle regulated by an external contact. Case 2.

Case2: contact changes its status during pump's work.
When contact go back to its previous status, the pump return to normal operation but a BATCH alarm is shown on display.

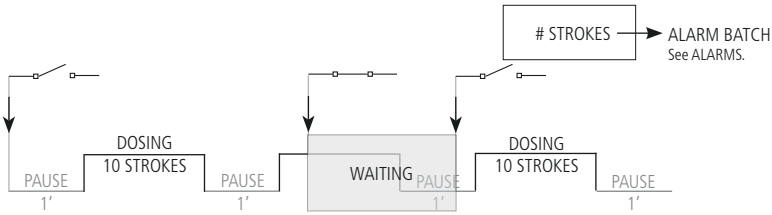

VOLT

Voltage from an external device drives the pump that doses proportionally using a minimum and maximum of strokes for minute set during program session.

WHEN	This mode is used with controllers provided of a proportional output in voltage.
PARAMETERS	• HIV (high voltage) • LOV (low voltage) • SPM (strokes per minute)

Fig. 29. VOLT menu

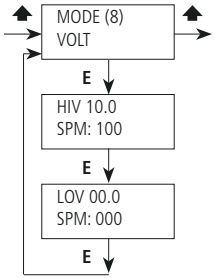

In VOLT working mode it is possible to display the voltage input value (Volt).

Warning: if any programming error occurs (i.e. setting same value for HIV and LOV) dislpay will show a **WRONG ENTRY message**. Set correct parameters.

mA

Current from an external device drives the pump that doses proportionally using a minimum and maximum of strokes for minute set during program session.

WHEN	This mode is used with controllers provided of a proportional output in voltage.
PARAMETERS	• HImA (high mA current) • LOmA (low mA current) • SPM (strokes per minute)

Fig. 30. mA menu

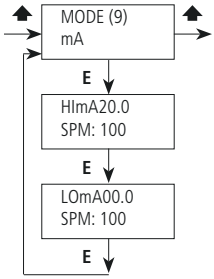

In mA working mode it is possible to display the current input value (mA).

Warning: if any programming error occurs (i.e. setting same value for HImA and LOmA) dislpay will show a **WRONG ENTRY message**. Set correct parameters.

PROG 2 SETUP: Working parameters

From this menu it is possible to set pump's working parameters. See the list below

Tab. 7. PROG 2 SETUP

MENU		PARAMETERS
1	CC/ST	Cubic centimeters per stroke obtained by the Test function (see next).
2	TEST	Test function for pump's calibration: define the precise cc (cubic centimeters) quantity of the pump.
3	LEVEL	Level pre-alarm (product reserve).
4	SEFL	There is a flow sensor installed Function of **automatic priming with recovery strokes system**.
5	STAND-BY	External signal that enable/disable the pump. External signal is connected to pump's Stand-by input (see **Pump's connections**).
6	OUT AL	Alarm relais output (see **Pump's connections**)
7	ALARMS	Enabling pump's alarms (level, stand-by, flow sensor, ppm, perc, mlq, batch). The event that generates an alarm is displayed in the main menu - see **ALARMS**.
8	WMETER	With a water meter installed, set water meter pulses.
9	TIMEOUT	Maximum time between a pulse and the other within which the pump distributes dosing homogenously.
10	UNIT	Unit of measure (litres or gallons).
11	DELAY	Delay time at pump's power up.
12	PASSWORD	Password setting.

CC/ST

Set cubic centimeters per stroke obtained by the TEST function (see next).

Fig. 31. CC/ST menu

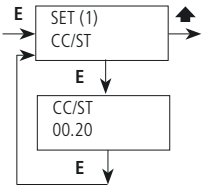

TEST

This test defines the precise cc/st (cubic centimetre/stro e) quantity provided by the pump.

1. Install the pump on the plant. Insert suction hose (with foot filter) into a ml g aduated cylinder (1ml = 1cc).
   If pump's model is self-priming insert venting hose into the graduated cylinder too.
2. Power on the pump.
3. Fill up the graduate cylinder with the chemical until to reach a known value.
4. Choose "TEST" from Set up menu and insert 20 strokes. This value is the strokes that the pump will produce during the procedure.
5. Press "E". The pump will begin to produce the 20 strokes and to suck the chemical from the graduated cylinder.
6. At the end of the 20 strokes, read the chemical value left into graduated cylinder.
7. Substract the initial value to the left value.
8. Divide the result with the ST value (20).
9. Insert this value intp "CC/ST" menu (see above).
10. If obtained result is too small or too big, try to change strokes value (20).

Fig. 32. TEST menu

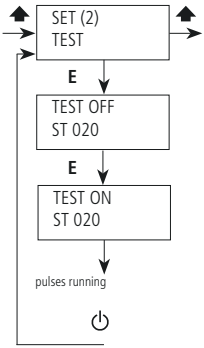

LEVEL

This function defines a **pre-alarm status** that the chemical is going to end into the tank. To calculate the value you should consider the chemical level between foot filter and suction level

Fig. 34. Pre-alarm level.

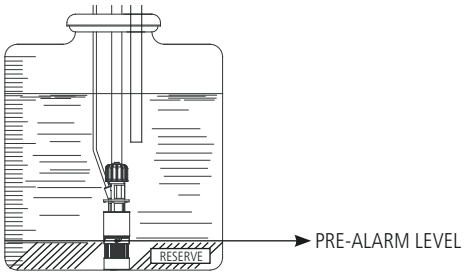

If pre-alarm's active, pump will continue to dosing but the symbol # will appear on display (See ALARM LEVEL - **ALARMS**):

Fig. 33. LEVEL menu

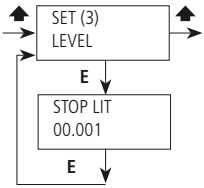

SEFL

If you have a **flow sensor** installed:

- enable flow sensor
- set the number of stroke after which (SEFL) pump shows an alarm on display (# symbol on main menu. See ALARM SEFL - **ALARMS**);
- define if a SEFL alarm occur , the pump should stop or not (STOP YES or NO);
- set recovery fault (RECOVERY FAULT): if the flow sensor will produces lost strokes (caused by product's end or by air bubbles), the pump will recover them (recovery strokes in synching with SEFL). Set this function by choosing how many lost strokes will be needed to recover dosage (RECOVERY AFTER).

Performed pulses, or sooner if the priming is complete, the pump will start again to recover data lost (SEFL).

Otherwise, if there hasn't been priming, the pump will signal an alarm (ALARM SEFL).

If, during recovery of data lost, there is no synchrony with SEFL, the number of failures is not scaled.

"SEFL" flow sensor is an optional device.

FIG. 35.SEFL menu

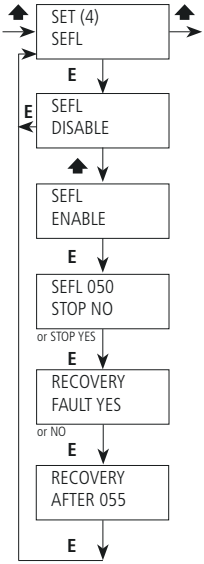

STAND-BY

This function allows the pump to dose only when an **external signal** is received from "Stand-by" input. This signal can be enabled as a N.O. contact (Normally Opened) , N.C. contact (Normally Closed) or disabled.

Fig. 36. Stand-by menu.

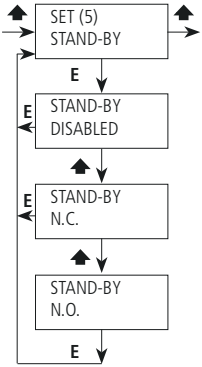

OUT AL

This function allows to manage the **alarm output contact status**.
The alarm can be set as "N.O." contact (Normally Open) or "N.C." contact (Normally Closed).

Fig. 37. Out al. menu

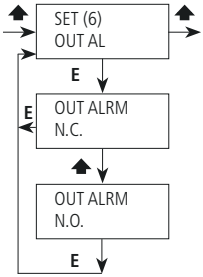

ALARMS

This function allows to manage (enable or disable) the following **alarms relays output**:
- level (LEV): product end;
- stand-by (STBY): pump stop;
- flow sensor (SEFL) exceeding the number of data lost or priming failed;
- ppm (PPM): exceeding the operating frequency in PPM mode;
- percentage (PERC): exceeding the operating frequency in PERC mode;
- mlq (MLQ): exceeding the operating frequency in MLQ mode;
- batch (BATCH): in BATCH mode, a contact status change stops dosing.

Fig. 38. Alarms menu.

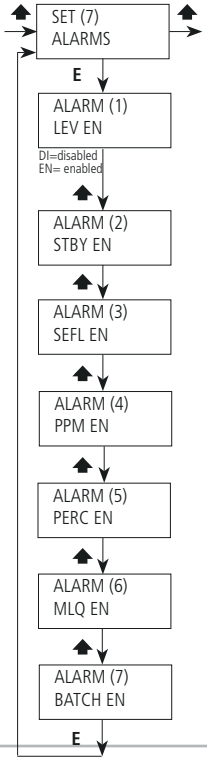

WMETER

This menu allows to set **water meter features**.
It is possible to insert the pulses' amount produced by the water meter, according to which the pump will optimize the PPM / MLQ / PERC operation mode and update the stats menu.
Choose "Pulse/L" for a water meter that produces many pulses.
Choose "L/Pulse" for a water meter that produces few pulses.
Setting "000.0", the pump does not accept the signal and it is not possible to save the data.

Fig. 39. Wmeter menu.

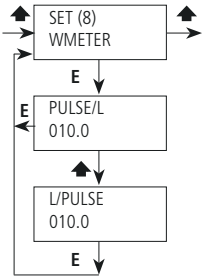

TIMEOUT

This menu allows to set the **max time between pulses**.
When the pump receives a pulse from the water meter, it starts the dosing activity through an amount of time (from the first pulse to the following one)
At the first puls , the pump distributes the quantity to be dosed in the shortest time possible.
From the second pulse, the pump will dose the same quantity homogeneously between pulses.
Timeout is maximum time between a pulse and the following one.
If this time exceeds, the pump will reinitialize the dosing activity as the first time that a pulse has been received.
Default value is 120 seconds.

Fig. 40. Timeout menu.

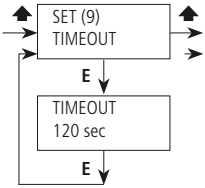

This setting is only for MULTIPLY, PPM, PERC and MLQ working mode when the result is a multiplication.
This setting is NOT for DIVIDE and in all working modes when the result is a division.

Fig. 41. Timeout.

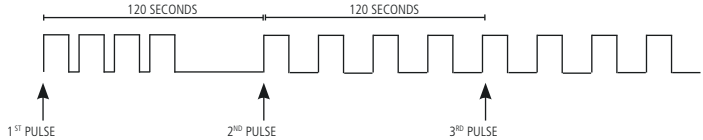

UNIT

This menu allows to choose between **liters or gallons measurement unit**.

Fig. 42. Unit menu.

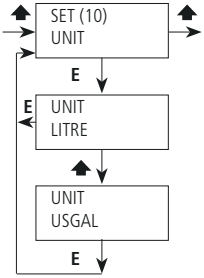

DELAY

This menu allows to set a **delay time** before dosing activity.
Delay time can be set from 0 to 10 minutes.
It is possible to stop delay by pressing any key.

Fig. 43. Delay menu.

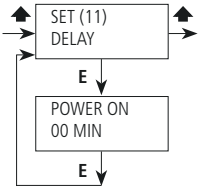

PASSWORD

Password protect Setup Menu.
Default password is 0000. Change password at first acces .
For lost password see **RESET PASSWORD procedure**.

Fig. 44. Password menu.

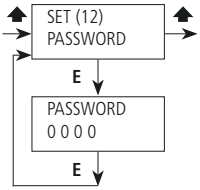

PROG 3 STAT: Statistics

This menu allows to know **statistics about dosing**, liters of product dosed and number of strokes. All counters are resettable.

Tab. 8. PROG 3 STAT: statistics menu.

MENU		STATISTIC
1	TOT DOS	Litres of product.
2	COUNTER	Number of strokes.

Fig. 45. Statistics menu.

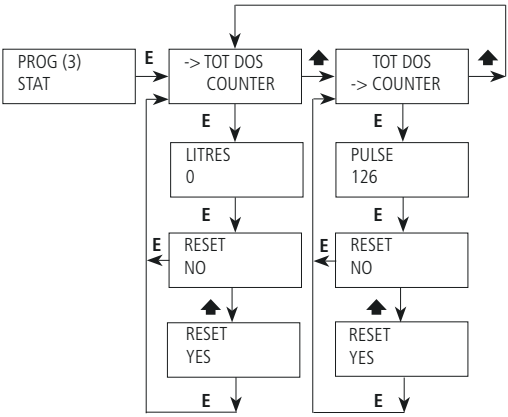

ALARMS

(hash mark) in main menu indicates one or more alarms active.
To visualize alarms active, move on screen ALARM QTY: xx.
Enter using ➡

Fig. 46. Alarms menu.

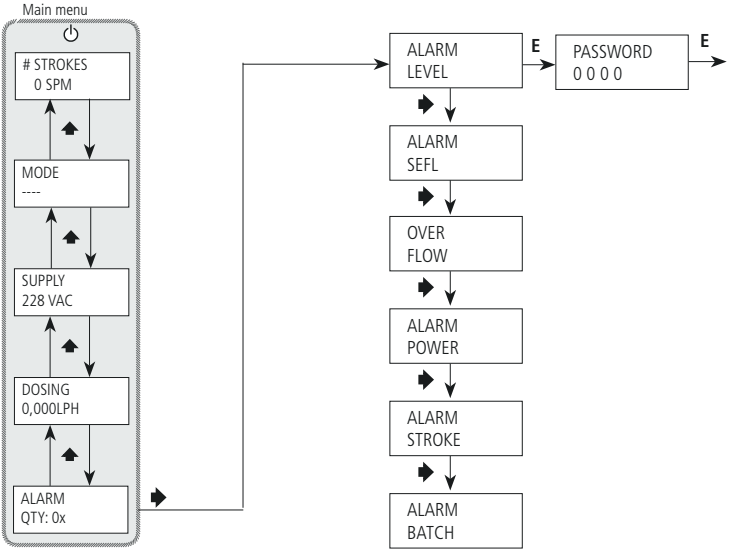

The windows displayed show which alarms are active.

Tab. 9. Alarms management

ALARM	PROBLEM	HOW MANAGE
LEVEL	End product	Refill the tan
SEFL	Exceeding the number of lost pulses Priming failure	Check SEFL Prime the pump head as described in 5 **How to prime pump head** Turn off and on the pump
OVER FLOW	Working frequency of the pump exceed the value on the label	Check settings Check pump capacity Turn off and on the pump
POWER	Power supply is out of range	Check power supply correspond to label Turn off and on the pump
STROKE	Capacity of the pump exceed the value on the label	Check settings Check pump capacity Turn off and on the pump
BATCH	Dosing interruption due to a change of contact status (Batch mode).	Check the correspondence between the contact provided and the pump setting Turn off and on the pump

Note: During normal operation if an alarm occurs the symbol "#" appers on display!

TROUBLESHOOTING

Tab. 10. Troubleshooting

PROBLEM	CAUSE	HOW MANAGE
Pump does not turn on	• There is not power supply. • Protection fuse is broken • Main board failure	• Connect pump to main supply • Replace fuse, see **Fuse replacement procedure**. • Replace cirucit, see **Main board replacement procedure**.
Pump is not dosing but solenoid is operating	• Foot filter is obstructe • Unprimed pump (suction hose is empty) • Air bubbles in the hydraulic circuit • Product to dose is generating gas	• Clean foot filte • Prime the pump, see **How to prime pump head** • Check valves, hoses and fittings and let air flo away • Turn on venting valve and let air flow a ay. Use a self-venting pump head model.
Pump is not dosing and solenoid isn't operating or slightly operating.	• Crystals block the balls inside the valves • Injection valve obstructed	• Clean valves and try to dose 2-3 liters of normal water • Change valves
Display shows ERROR MEM	Error in data storage	Restore default value, see **LOAD DEFAULT procedure**.
Display shows ERROR DATA	Error in data setting	Check the value set. If correct and the error still persist, the pump could be undersized
Display shows WRONG PASSWORD	Error in password enter	Restore a new password, see **RESET PASSWORD procedure**
SEFL enabled but asterisk is not displayed	• Hoses and/or valves obstruction • SEFL not connected	• Clean valves and try to dose 2-3 liters of normal water • Change valves • Turn off the pump, connect SEFL and then turn on the pump
Display shows INPUT OPEN	In mA and VOLT working mode only: no signal input	Check INPUT signal

LOAD DEFAULT procedure

This procedure deletes all programming data set. It reloads the default data of the pump (**Default parameter**).
Follow this procedure:

- unplug power supply;
- plug in power supply keeping pressed both ▲ and ▶ .
- Display shows for few seconds LOAD DEFAULT message before start up the pump.

RESET PASSWORD procedure

This procedure resets the password set and reloads the default password of the pump ("0000").
Follow this procedure:

- unplug power supply;
- plug in power supply keeping pressed both ▲ and **ESC**.
- Display shows for few seconds RESET PASSWORD message before start up the pump.

Fuse replacement procedure

⚠ **This procedure SHOULD BE CARRIED OUT BY AUTHORIZED AND QUALIFIED PERSONNEL**

For fuse replacement is necessary to use a 3x16 and 3x15 screwdriver and a new fuse (same model of old one). See **Spare parts.**
Follow this procedure:

⚠ **POWER SUPPLY DISCONNECTION**
Always disconnect power before you perform any installation or maintenance tasks. Failure to disconnect power will result in serious physical injury.

- Disconnect all hoses.
- Remove screws from pump's back.
- Pull pump's back cover until it's completed separated from pump's front.
- Locate the blown fuse and replace it.
- Reassemble the pump.
- Reinsert screws.

Main board replacement procedure

⚠ **This procedure SHOULD BE CARRIED OUT BY AUTHORIZED AND QUALIFIED PERSONNEL**

For main board replacement is necessary to use a 3x16 and 3x15 screwdriver and a new main board (same model of old one). See **Spare parts.**
Follow this procedure:

⚠ **POWER SUPPLY DISCONNECTION**
Always disconnect power before you perform any installation or maintenance tasks. Failure to disconnect power will result in serious physical injury.

- Disconnect all hoses.
- Remove screws from pump's back.
- Pull pump's back cover until it's completed separated from pump's front.
- Completely disconnect wires from main board and replace it. Reinsert screws.
- Reconnect wires to the main board (see **Main board**).
- Reassemble the pump.
- Reinsert screws.

⚠

Main board

Fig. 47. TMS MF

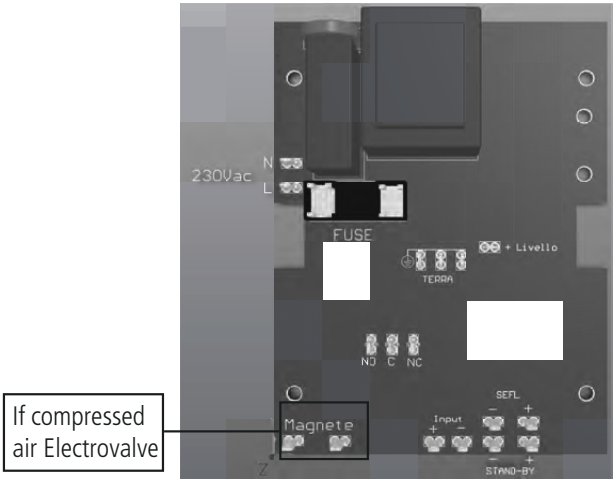

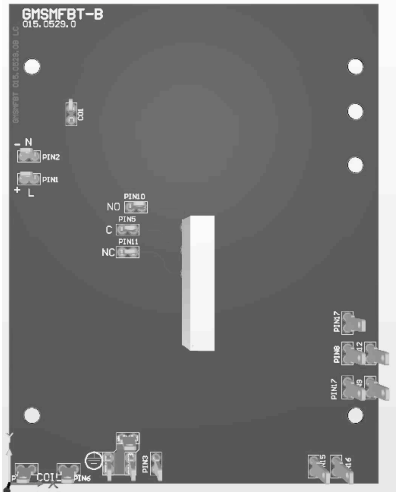

VDC Version

Fig. 48. TMS MF for connection to a water meter HALL effect.

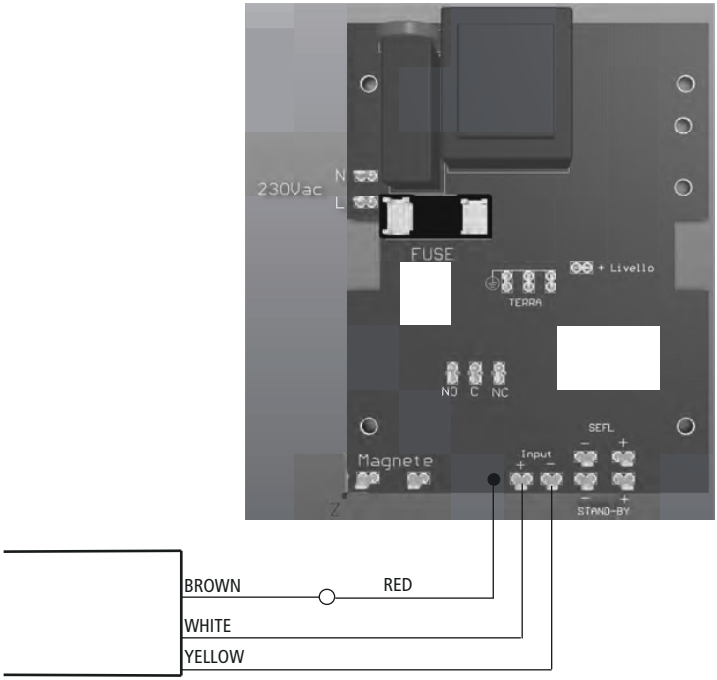

Maintenance schedule

In order to ensure the requirements of potable drinking water treated and the maintenance of the improvements as declared by the manufacturer, this equipment must be checked at least once a month.

OPERATOR PROTECTION
Use safety equipment according to the company regulations.
Use this safety equipment within the work area during installation, service and when handling chemicals:
- **protective mask**
- **protective gloves**
- **safety goggles**
- **ear plugs or hear muffs**
- **further security device, if necessary.**

POWER SUPPLY DISCONNECTION
Always disconnect power before you perform any installation or maintenance tasks. Failure to disconnect power will result in serious physical injury.

Installation and maintenance tasks should be carried out by AUTHORIZED AND QUALIFIED PERSONNEL only in accordance with local regulations.

Use original spare parts.

Maintenance inspection

Shutdown the dosing pump before any maintenance operation **Shutdown procedure.**

A maintenance schedule includes these types of inspections:
- Routine maintenance and inspections
- Three-month inspections
- Annual inspections

Shorten the inspection intervals appropriately if the pumped chemical is abrasive or corrosive.

Routine maitenance and inspections
Perform these tasks whenever you perform routine maintenance:
- Inspect the seal. Ensure that there are no leaks from the mechanical seal.
- Check electrical wiring
- Check for unusual noise and vibration (noise allowed ± 5 dB: see **Technical and electrical features**).
- Check the pump and piping for leaks.
- Check for corrosion on parts of the pump and / or on hoses.

Three-month inspections
Perform these tasks every three months:
- Check that the tightenings.
- Check the mechanical seal if the pump has been left idle.

Annual inspections
Perform these inspections one time each year:
- Check the pump capacity (as per nameplate).
- Check the pump pressure (as per nameplate).
- Check the pump power (as per nameplate).

f the pump performance does not satisfy your process requirements, and the process requirements have not changed, then perform these steps:
1. Disassemble the pump.
2. Inspect it.
3. Replace worn parts.

Shutdown procedure

This procedure SHOULD BE CARRIED OUT BY AUTHORIZED AND QUALIFIED PERSONNEL

OPERATOR PROTECTION
Use safety equipment according to the company regulations.
Use this safety equipment within the work area during installation, service and when handling chemicals:
- **protective mask**
- **protective gloves**
- **safety goggles**
- **ear plugs or hear muffs**
- **further security device, if necessary.**

Shutdown the dosing pump **before any maintenance operation** or **before long downtimes**. Disconnect power and ensure it cannot be restarted.

Depressurize the system. The liquid may leak splashing.

Drain the chemical from pump head.
Release the pressure and disconnect the disharge pipe from the discharge valve.
Rinse the pump head and clean all valves.

Delivery curves

Flow rate indicated is for H_2O at 20°C at the rated pressure.
Dosing accuracy ± 2% at constant pressure ± 0,5 bar.

Fig. 49. Delivery curves TMS MF

2005: l/h 05 bar 20
Pump head mod. L

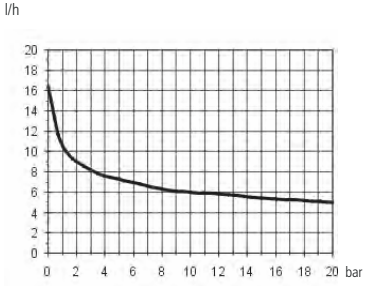

0515: l/h 15 bar 5
Pump head mod. N

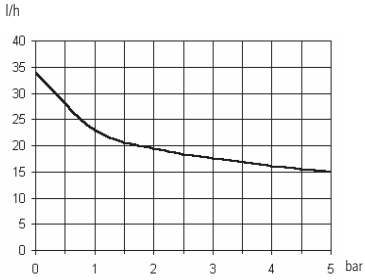

0420: l/h 20 bar 4
Pump head mod. N

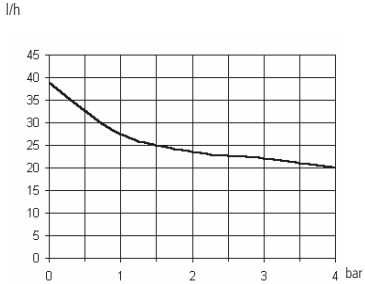

0330: l/h 30 bar 3
Pump head mod. S

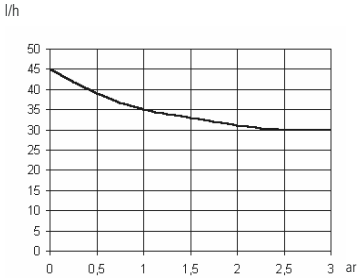

0150: l/h 50 bar 1
Pump head mod. S

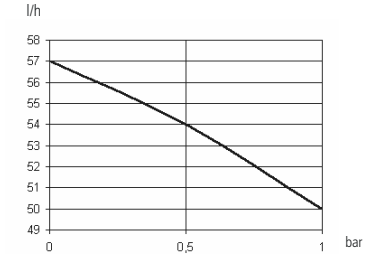

00100: l/h 100 bar 0
Pump head mod. T

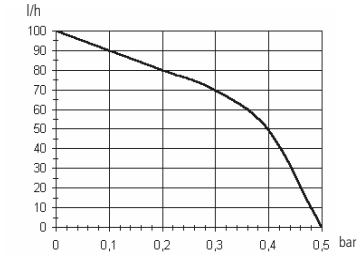

Fig. 50. Delivery curves TMSA MF

203,2: l/h 3,2 bar 20
Pump head mod. LA

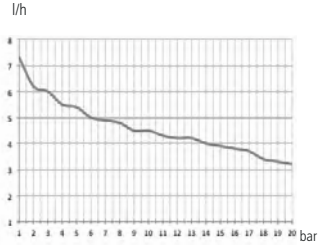

0510: l/h 10 bar 5
Pump head mod. NA

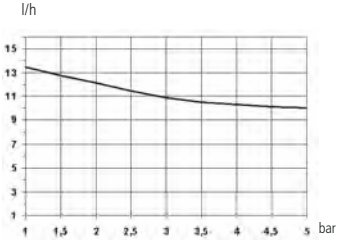

0413: l/h 13 bar 4
Pump head mod. NA

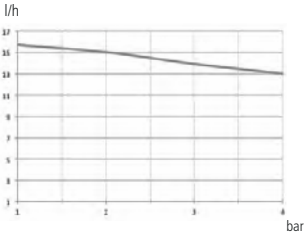

Fig. 51. Delivery curves TMS AC MF

05150: l/h 150 bar 5
Pump head mod. T

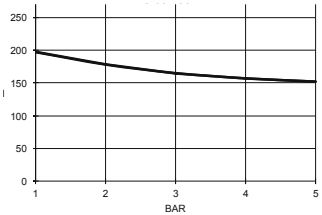

00230: l/h 230 bar 0
Pump head mod. T

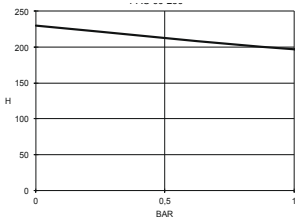

1050: l/h 50 bar 10
Pump head mod. N

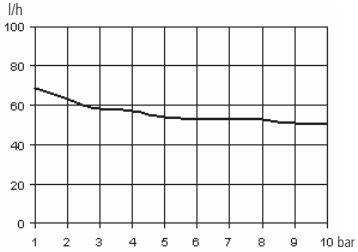

Dimensions

Fig. 52. Dimensions with pump head mod. S or T

Unit value: mm

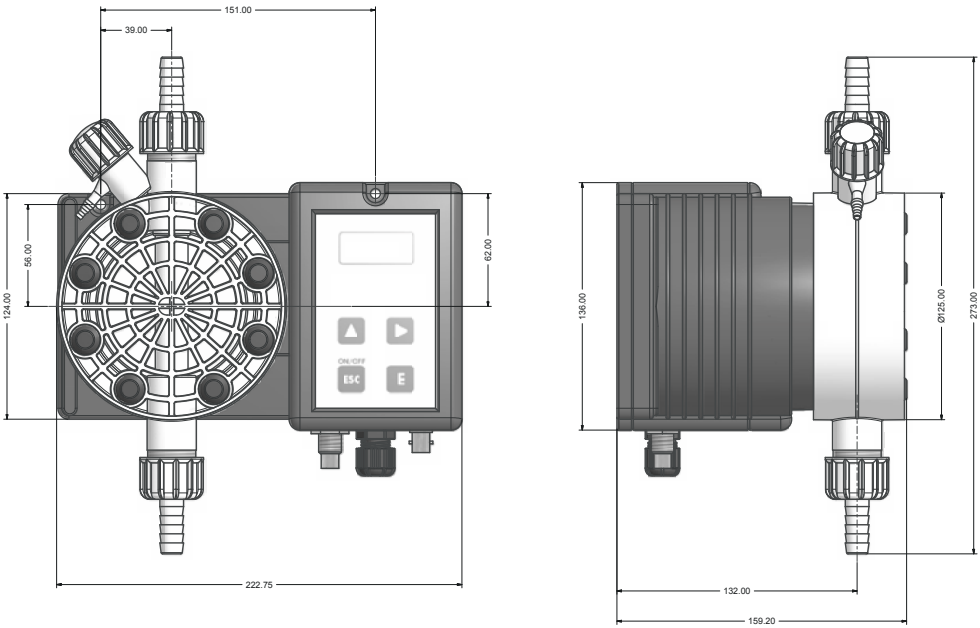

Fig. 53. Dimensions with pump head mod. N or P

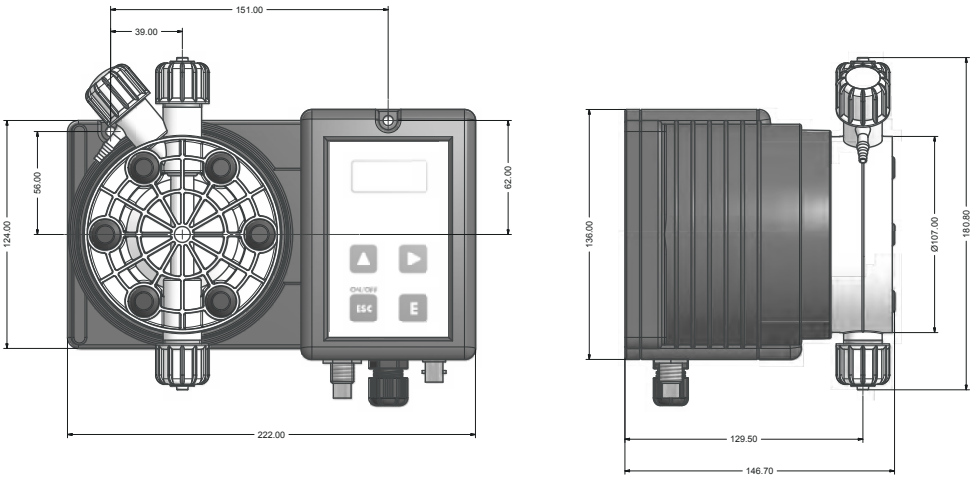

Chemical compatibility table

Solenoid driven metering pumps are widely used to dose chemical fluids and it is important that the most suitable material in contact with fluid is selected for each application. This compatibility table serves as a useful help in this respect. All the informations in this list are verified periodically and believed to be correct on the date of issuance. All the informations in this list are based on manufacturer's data and its own experience but since the resistance of any material depends by several factors this list is supplied only as an initial guide, in no way manufacturer makes warranties of any matter respect to the informations provided in this list.

Tab. 11. Chemical compatibility table.

Product	Formula	Ceram.	PVDF	PP	PVC	SS 316	PMMA	Hastel.	PTFE	FPM	EPDM	NBR	PE
Acetic Acid, Max 75%	CH3COOH	2	1	1	1	1	3	1	1	3	1	3	1
Hydrochloric Acid, Concentrate	HCl	1	1	1	1	3	1	1	1	1	3	3	1
Hydrofluoric Acid 40%	H2F2	3	1	3	2	3	3	2	1	1	3	3	1
Phosphoric Acid, 50%	H3PO4	1	1	1	1	2	1	1	1	1	1	3	1
Nitric Acid, 65%	HNO3	1	1	2	3	2	3	1	1	1	3	3	2
Sulphuric Acid, 85%	H2SO4	1	1	1	1	2	3	1	1	1	3	3	1
Sulphuric Acid, 98.5%	H2SO4	1	1	3	3	3	3	1	1	1	3	3	3
Amines	R-NH2	1	2	1	3	1	-	1	1	3	3	1	1
Sodium Bisulphite	NaHSO3	1	1	1	1	2	1	1	1	1	1	1	1
Sodium Carbonate (Soda)	Na2CO3	2	1	1	1	1	1	1	1	2	1	1	1
Ferric Chloride	FeCl3	1	1	1	1	3	1	1	1	1	1	1	1
Calcium Hydroxide (Slaked Lime)	Ca(OH)2	1	1	1	1	1	1	1	1	1	1	1	1
Sodium Hydroxide (Caustic Soda)	NaOH	2	3	1	1	1	1	1	1	2	1	2	1
[1] Calcium Hypochlor.(Chlor. ted Lime)	Ca(OCl)2	1	1	1	1	3	1	1	1	1	1	3	1
Sodium Hypochlorite, 12.5%	NaOCl + NaCl	1	1	2	1	3	1	1	1	1	1	2	3
Potassium Permanganate, 10%	KMnO4	1	1	1	1	1	1	1	1	1	1	3	1
Hydrogen Peroxide, 30% (Perydrol)	H2O2	1	1	1	1	1	3	1	1	1	3	3	1
Aluminium Sulphate	Al2(SO4)3	1	1	1	1	1	1	1	1	1	1	1	1
Copper-II-Sulphate (Roman Vitriol)	CuSO4	1	1	1	1	1	1	1	1	1	1	1	1

[1] Calcium Hypochlor.(Chlor.ted Lime): WQA test was based on 1% Calcium Hypochlorite solution.

1 - Good resistance rating

2 - Fairly resistance rating

3- Not resistant

Materials

Polyvinyldene fluoride (PVDF .....Pump heads, Valves, Fittings
Polypropylene (PP).....Pump heads, Valves, Fittings
PVC .....Pump heads
Stainless steel (SS 316).....Pump heads, Valves
Polymethyl Metacrilate Acrylic (PMMA) ...Pump heads
Polytetrafluoroethylene (PTFE .....Diaphragm
Fluorocarbon (FPM).....O-ring
Ethylene propylene (EPDM).....O-ring
Nitrile (NBR).....O-ring

Hoses resistance table

Hose features are very important for a reliable dosage. Every pump's model is made to work in the best way using selected hoses according to pump's capacity / model. Information reported here are intended for standard use only. For extended information ask to hose's manufacturer.

Suction / Delivery Hose			
4x6 mm PVC (transparent)	4x8 mm PE (opaque)	6x8 mm PE (opaque)	8x12 mm PVC (transparent)

Delivery Hose	Working Pressure				Breaking Pressure			
4x6 mm PE 230 (opaque)	20°C 12 bar	30°C 10.5 bar	40°C 8.5 bar	50°C 6.2 bar	20°C 36 bar	30°C 31.5 bar	40°C 25.5 bar	50°C 18.5 bar
4x8 mm PE 230 (opaque)	20°C 19 bar	30°C 15.7 bar	40°C 12 bar	50°C 7.5 bar	20°C 57 bar	30°C 47 bar	40°C 36 bar	50°C 22.5 bar
6x8 mm PE 230 (opaque)	20°C 8.6 bar	30°C 6.8 bar	40°C 4.8 bar	50°C 2.3 bar	20°C 26 bar	30°C 20.5 bar	40°C 14.5 bar	50°C 7 bar
8x12 mm PE 230 (opaque)	20°C 12 bar	30°C 10.5 bar	40°C 8.5 bar	50°C 6.2 bar	20°C 36 bar	30°C 31.5 bar	40°C 25.5 bar	50°C 18.5 bar

4x6 mm PVDF Flex 2800 (opaque)	20°C 40 bar	30°C 34 bar	40°C 30 bar	50°C 27 bar	60°C 24.8 bar	80°C 20 bar	90°C 10 bar
6x8 mm PVDF Flex 2800 (opaque)	20°C 29 bar	30°C 25.5 bar	40°C 22 bar	50°C 20 bar	60°C 18 bar	80°C 14.5 bar	90°C 7.3 bar
8X10 mm PVDF Flex 2800 (opaque)	20°C 18 bar	30°C 15.5 bar	40°C 13.5 bar	50°C 12.5 bar	60°C 11.2 bar	80°C 9 bar	90°C 4.5 bar

¼ PE 230 (opaque)	20°C 17.6 bar
⅜ PE 230 (opaque)	20°C 10.6 bar
½ PE 230 (opaque)	20°C 10.6 bar

Fig. 54. TMS MF exploded view

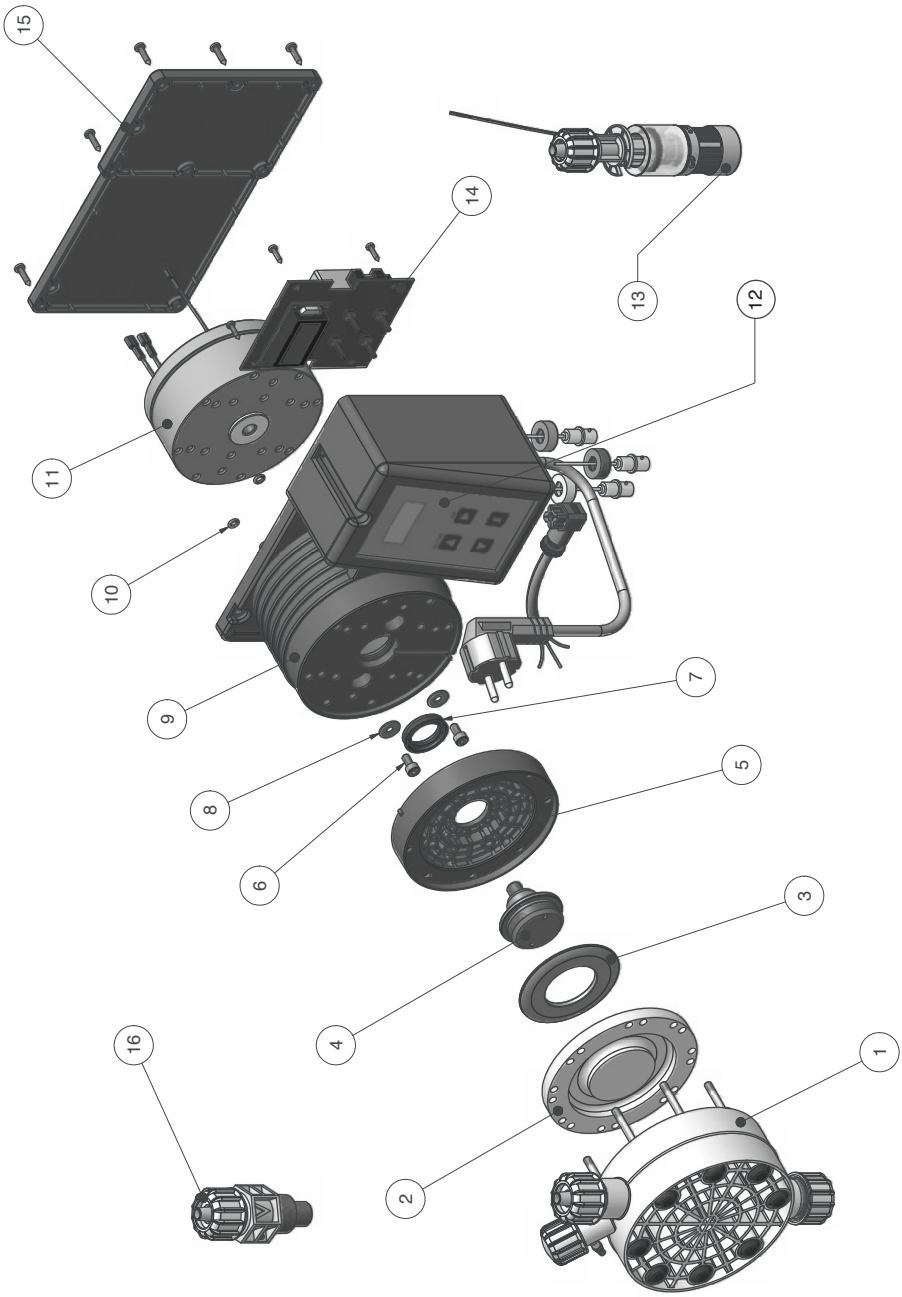

Fig. 55. TMS AC MF exploded view

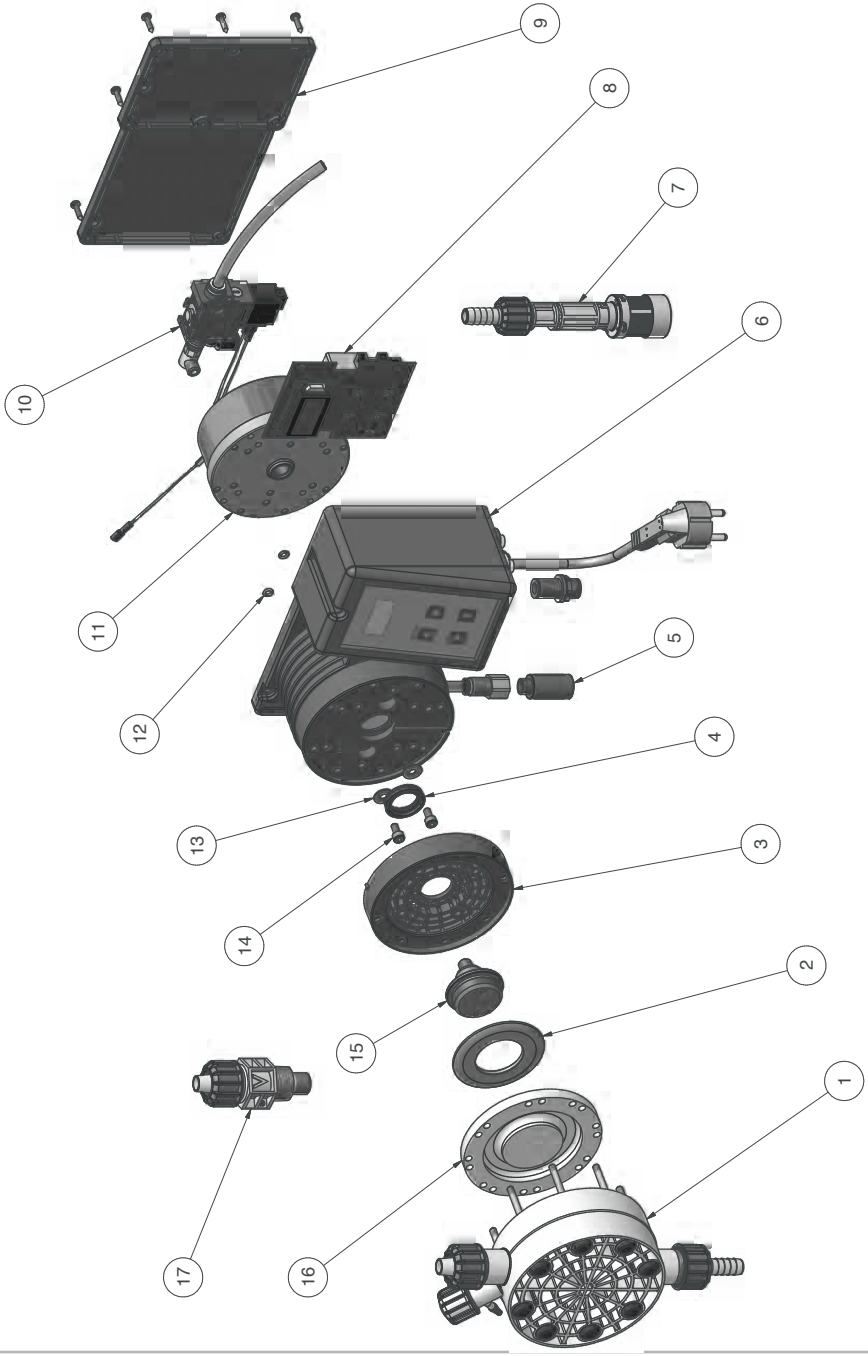

PRODUCT SERVICE REPAIR FORM

ENCLOSE THE PRESENT FORM TO THE DELIVERY NOTE

DATE .....

SENDER

Company name.....

Address .....

Phone no. .....

Contact person.....

PRODUCT TYPE (see product label)

DEVICE CODE .....

S/N (serial number).....

OPERATING CONDITIONS

Location/installation description .....

.....

Chemical .....

Start-up (date) ..... Running time (approx. hours).....

REMOVE ALL THE LIQUID INTO THE PUMP HEAD AND DRY IT BEFORE PACKAGING IN ITS ORIGINAL BOX.

DESCRIPTION OF PROBLEM

☐ MECHANICAL

- Wear parts.....
- Brekage/other damages .....
- Corrosion.....
- Other.....

☐ ELECTRICAL

- Connections, connector, cables .....
- Operating controls (keyboard, display, etc.) .....
- Elettronics.....
- Other.....

☐ LEAKS

- Connections.....
- Pump head .....

☐ NOT OR INADEQUATE FUNCTION/OTHER

.....

.....

.....

I declare that the dosing pump is free of any hazardous chemical.

Signature of the compiler

Company stamp

Summary

GENERAL SAFETY GUIDELINES 2
PURPOSE OF USE AND SAFETY 3
ENVIRONMENTAL SAFETY 4
LABELS 4
SPARE PARTS 4

INTRODUCTION 6
TMS MF 6
TMSA MF 6
TMS AC MF 6
Unpacking 6
Technical and electrical features 9
List of materials 10
Default parameter 10
INSTALLATION 11
Metering pump installation 11
Pump positioning 11
Flow sensor installation (SEFL) 13
HYDRAULIC CONNECTION 14
Level probe 14
Suction hose / foot filter connectio 15
Delivery hose / pump head 15
Injection valve 16
Venting hose 16
TMSA MF self venting pump head installation 17
ELECTRICAL INSTALLATION 18
Preliminary checks 18
Pump's connections 19
Connect a water meter with Hall effect 19
PRIMING 20
How to prime pump head 20
PROGRAMMING 21
Keyboard 21
Main menu 21
Enter in programming area 22

PROG 1 MODE: Working mode 22
CONSTANT 23
DIVIDE 24
Calculate the division value 24
MULTIPLY 25
Calculate the multiplication value 25
PPM 26
Upkeep working mode 26
PERC 27
Product's amount to dose 27
Choosing a water meter 27
MLQ 28
BATCH 29
EXTERNAL: an external signal regulates dosing 29
MANUAL: manual dosing 30
INTERNAL: work-pause cycle 30
VOLT 32
mA 33

PROG 2 SETUP: Working parameters 34
cc/st 35
TEST 35
level 36
SEFL 36
STAND-BY 37
OUT AL 38
ALARMS 38
WMETER 39
TIMEOUT 39
UNIT 40
DELAY 40
PASSWORD 40

PROG 3 STAT: Statistics 41

ALARMS 42
TROUBLESHOOTING 43
LOAD DEFAULT procedure 44
RESET PASSWORD procedure 44
Fuse replacement procedure 44
Main board replacement procedure 44
Main board 45
Maintenance schedule 46
Maintenance inspection 46
Shutdown procedure 47
Delivery curves 48
Dimensions 50
Chemical compatibility table 51
Materials 51
Hoses resistance table 52

PRECAUTIONS RELATING TO DIRECTIVES, REGULATIONS AND STANDARDS

§ CE/EU and UKCA marking

We guarantees that this product meets the essential requirements of the applicable Directives and Regulations based on the following specifications. Please carefully consider the following specifications for use of the product in European Union member countries and the United Kingdom.

• CE/EU harmonized directives and standards

Directives
DIRECTIVE 2006/42/EC
DIRECTIVE 2014/35/EU
DIRECTIVE 2014/30/EU
DIRECTIVE 2011/65/EU
DELEGATED DIRECTIVE (EU) 2015/863

Harmonized standards
EN ISO 12100
EN 809
EN ISO 20361
EN IEC 61326-1
EN 61010-1
EN IEC 63000

• UKCA harmonized regulations and standards

Regulations
2008 No. 1597
2008 2016 No. 1091
2016 No. 1101
2012 No. 3032

Harmonized standards
BS EN ISO 12100
BS EN 809
BS EN ISO 20361
BS EN IEC 61326-1
BS EN 61010-1
BS EN IEC 63000

Disposal of end-of-life equipment by users

This symbol warns you not to dispose of the product with normal waste. Respect human health and the environment by giving the discarded equipment to a designated collection center for the recycling of electronic and electrical equipment. For more information visit the online site.

When dismantling a pump please separate material types and send them according to local recycling disposal requirements. We appreciate your efforts in supporting your local Recycle Environmental Program. Working together we'll form an active union to assure the world's invaluable resources are conserved.