R990525

TMS - TMSA

TMS

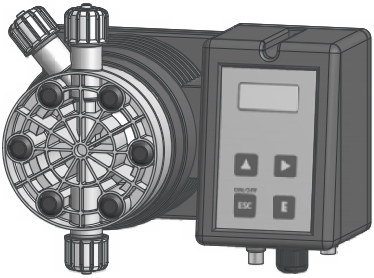

TMSA

SOLENOID DRIVEN METERING PUMPS
WITH DIAPHRAGM

EN

OPERATING MANUAL

This operating instructions contains safety information that if ignored can endanger life or result in serious injury.

Read these instructions **carefully** before use and keep them for future reference. The original instruction is in Italian. All non-Italian instructions are translations of the original instruction.

Information and specifications on this manual could be uncorrect or could have printing errors. Specifications are subject to change without notice.

Version: R1-11-13

Product Description *Descrizione Prodotto*	Electromagnetic dosing pump, T and TMS series *Pompa dosatrice elettromagnetiche, serie T e TMS*		
Product Identification Codes (the "_" symbols complete the product code based on the configuration of the variants) *Codici Identificativi Prodotto* *(i simboli "_" completano il codice del prodotto in base alla configurazione delle varianti)*	TAA _____ TAL _____ TAM _____ TAO _____ TAS _____ TAV _____ TAX _____ TCA _____ TCO _____ TCC _____	TIC _____ TIS _____ TOA _____ TPM _____ TPV _____ TSA _____ TSM _____ TTD _____ TVM _____ TAD _____	TAF _____ TAM _____ TAR _____ TDC _____ TFF _____ TMF _____ TMP _____ TPH _____ TRH _____

GENERAL SAFETY GUIDELINES

Operating, installing, or maintaining the unit in any way that is not covered in this manual could cause death, serious personal injury, or damage to the equipment.

ICON

This manual use the following safety message icon:

Danger!
Indicates a hazardous situation which, if not avoided, will result in death or serious injury.

Warning!
Indicates a hazardous situation which, if not avoided, could result in death or serious injury.

Important - A practice not related to personal injury or additional information.

Cross reference - An instance which refers to related information elsewhere in the same document

PURPOSE OF USE AND SAFETY

METERING PUMP IS INTENDED FOR CHEMICAL DOSING AND DRINKING WATER TREATMENT.

Do not use in explosive area (EX).
Do not use with flammable chemicals.
Do not use with radioactive chemicals.

Use after a proper installation.

Use the pump in accordance with the data and specifications printed on the label.

Do not modify or use in a manner inconsistent with the provisions of the operating manual.

Keep the pump protected from sun and water. Avoid water splashes.

In emergencies the pump should be switched off immediately. Disconnect the power cable from the power supply.

When using pump with aggressive chemicals observe the regulations concerning the transport and storage of aggressive fluids.

When installing always observe national regulations.

Manufacturer is not liable for any unauthorized use or misuse of this product that may cause injury, damage to persons or materials.

Pump must be accessible at all times for both operating and servicing. Access must not be obstructed in any way.

Feeder should be interlocked with a no-flow protection device.

Pump and accessories must be serviced and repaired by qualified and authorized personnel only.

Before any operation:
- **always read chemical Material Safety Data Sheet (MSDS);**
- **always wear protective clothing;**
- **always discharge the liquid end before servicing the pump.**
- **empty and rinse the liquid end before work on a pump which has been used with hazardous or unknown chemicals.**

This equipment requires regular maintenance to ensure potability requirements of the water and maintenance of improvements as declared by the manufaturer.

ENVIRONMENTAL SAFETY

Work area
Always keep the pump area clean to avoid and/or discover emissions.

Recycling guidelines

EWC code: 16 02 14

Always recycle according to these guidelines:
1. If the unit or parts are accepted by an authorized recycling company, then follow local recycling laws and regulations.
2. If the unit or parts are not accepted by an authorized recycling company, then return them to the nearest representative.

Waste and emissions regulations
Observe these safety regulations regarding waste and emissions:
- Dispose appropriately of all waste.
- Handle and dispose of the dosed chemical in compliance with applicable environmental regulations.
- Clean up all spills in accordance with safety and environmental procedures.
- Report all environmental emissions to the appropriate authorities.

LABELS

Fig. 1. Product label.

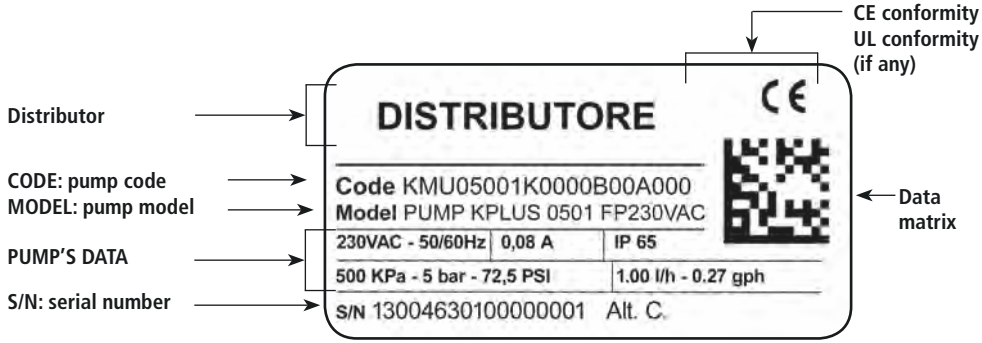

Spare parts

For spare parts orders or any other communication, refer to product label.
Code (CODE) and serial number (S / N) uniquely identify the pump.

Transportation and storage

A not suitable transportation or storage can cause damages.

Use origianal box to pack the pump.

Observe storage conditions also for transportation.

Although packed, always protect the unit against humidity and the action of chemicals.

Before return the dosing pump to the manufacturer Repair service, drain the chemical from pump head and rinse it. Refer to **Shutdown procedure.**

Fill the PRODUCT SERVICE REPAIR FORM and send it with the dosing pump.
Repair service is not accepted if PRODUCT SERVICE REPAIR FORM is missing.

DO NOT TRASH PACKAGING. USE IT TO RETURN THE PUMP.

Transportation and storage temperature ..... 10 ÷ 50°C (32 ÷ 122°F)
Umidity ..... 95% relative humidity (not condensed)

1. Introduction

Introduction:
Metering Pumps "TMS DIGITAL" and "TMSA Digital" Series are the ideal solution for low / middle dosing of chemicals. All control and setup parameters are available through a digital keyboard and they are displayed on a LCD backlit display. Stand-by input available.

Pump's capacity
Flow rate is determined by the stroke length and by the stroke speed. The stroke length is adjustable from 0 to 100% using the stroke length adjustment knob. However dosing accuracy is guarantee within an adjustment range from 30% to 100%.

Models:

TMS PH (TMSA PH)
Proportional pump driven by internal built-in pH meter (0÷14 pH) and level control. pH electrode input (electrode not included).

TMS RH (TMSA RH)
Proportional pump driven by internal built-in Redox (ORP) meter (0÷1000mV) and level control.
Redox electrode input (electrode not included).

Legend:

a. Alternating Current;

b. DC,

c. Protective Earth;

d. Standby;

e. Warning -

Note for models without main plug only: The unit shall be provided with a UL listed disconnect device, rated min. 250V, xxA

Capacity TMS

Pressure bar	Flow l/h
20	05
05	15
04	20
03	30
01	50
00	100

Capacity TMSA

Pressure bar	Flow l/h
20	3,2
05	10
04	13

2. Unpacking

Included into package:

n.2	Dibbles ø6
n.2	Self tapping screws 4,5 x 40
n.1	Delayed fuse 5 X 20
n.1	Level probe with axial foot filter (PVDF)
n.1	Injection valve
m 2	Delivery pipe (PVDF)
m 2	Suction pipe (transparent PVC)
m 2	Venting pipe (transparent PVC)
m 2,5	Signal cable for "Stand-by"
n.1	This installation manual

* If hose is 6x8 there is only a 4meters long hose.
Cut to obtain suction and delivery hoses.

Remove the contents from the box.

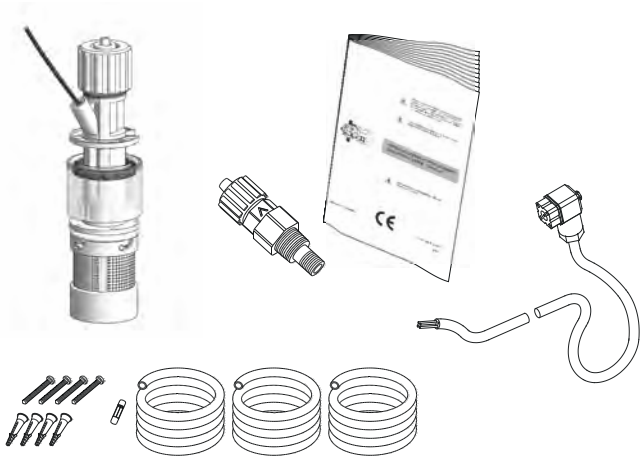

PLEASE DO NOT TRASH PACKAGING.
IT CAN BE USED TO RETURN THE PUMP.

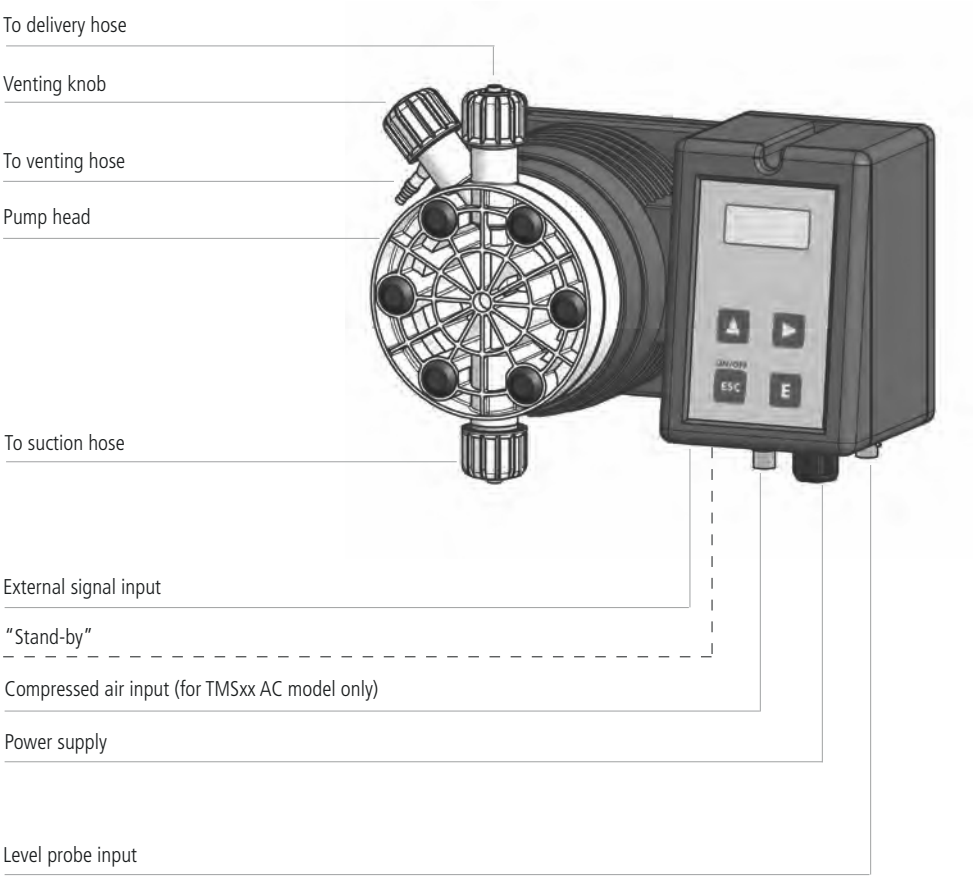

* Note:if knob isn't on 100% position then the pump will dose at pressure greater than the one declared on label.

4. Before to Install warnings

Pump's installation and operativity is made in 4 main steps:

Pump's installation

Hydraulic Installation (hoses, level probe, injection valve)

Electrical Installation (main power connection, priming)

Programming the pump.

Before to start, please read carefully the following safety information.

Protective clothes

Wear always protective clothes as masks, gloves, safety glasses and further security devices during ALL installation procedure and while handling chemicals.

Installation location

Pump must be installed in a safety place and fixed to the table / wall to avoid vibration problems!

Pump must be installed in a easy accessible place!

Pump must be installed in horizontal position!

Avoid water splashes and direct sun!

Hoses and Valves

Suction and delivery hoses must be installed in vertical position!
All hoses connections must be performed using only hands' force!
No tongs required!

Delivery hose must be firmly fixed to avoid suddenly movements that could damage near objects!

Suction hose must be shorter as possible and installed in vertical position to avoid air bubbles suction!

Use only hoses compatibles with product to dose! See chemical compatibility table at page 29. If dosing product is not listed please consult full compatibility table or contact chemical's manufacturer!

WARNING
IF EQUIPMENT IS SUPPLIED WITH A PLUG:

If an appliance coupler or separable plug is used as the disconnecting device, it shall be readily identifiable and easily reached by the operator. For single-phase portable equipment, a plug on a cord of length not greater than 3m is considered to be easily reached.

WARNING
IF EQUIPMENT IS NOT SUPPLIED WITH A PLUG:

a) a switch or circuit-breaker shall be included in the building installation
b) it shall be in close proximity to the equipment and within easy reach of the operator
c) it shall be marked as the disconnetting device for the equipment

5. Installation draw

Pump must be installed in a wall support at a maximum height (**from tank's bottom**) of **1,5 meters**.

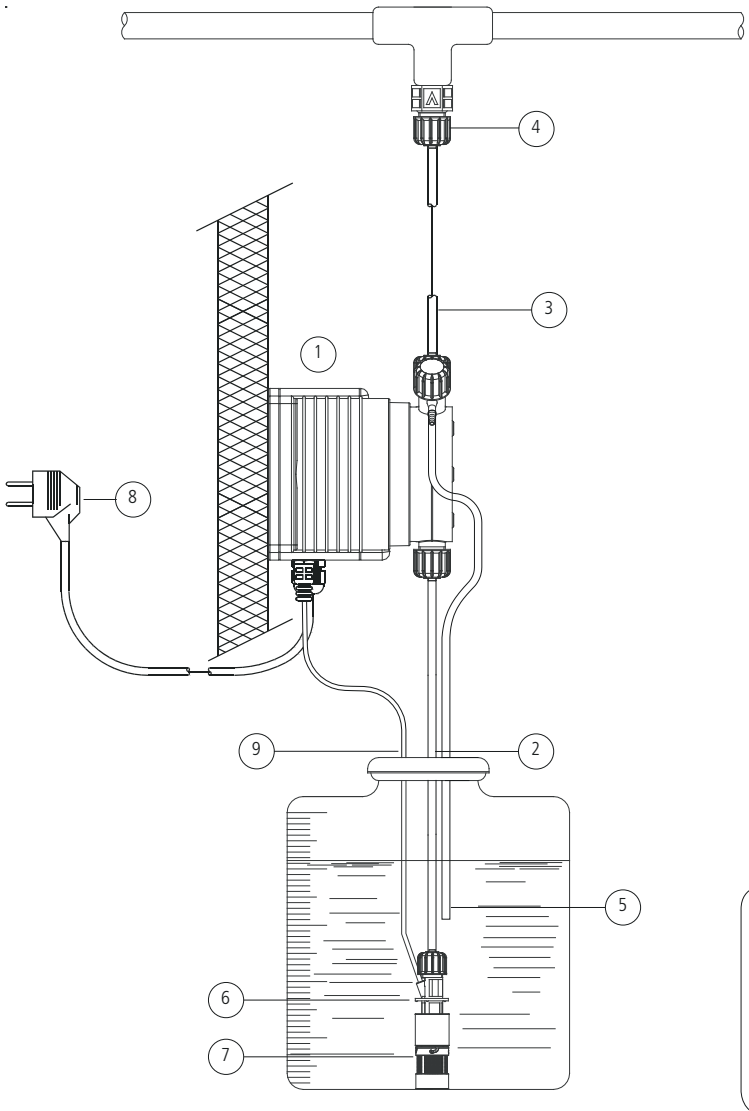

1 - Dosing Pump
2 - Suction Hose
3 - Delivery Hose
4 - Injection Valve
5 - Air discharge
6 - Level Probe
7 - Foot Filter
8 - Power Cable
9 - Stand-by input

6. Hydraulic installation

Hydraulic connections are:

Suction Hose with level probe and foot filter
Delivery Hose with injection valve
Venting hose

6.1 Suction Hose.

Completely unscrew tightening nut from pump's head and remove assembling components: tightening nut, holding ring and pipe holder.

Assembly as shown in fig. (A). Insert hose into pipe holder until it reaches the bottom.

Lock hose on pump's head by screwing down the tightening nut.
Use only hands to do it!

Connect other side of the hose to the foot filter using the same procedure.

fig. (A)

6.2 Assembling foot filter with level probe.

Level probe must be assembled with foot filter using the provided kit.
Foot valve is made to be installed into tank's bottom without sediments priming problem.

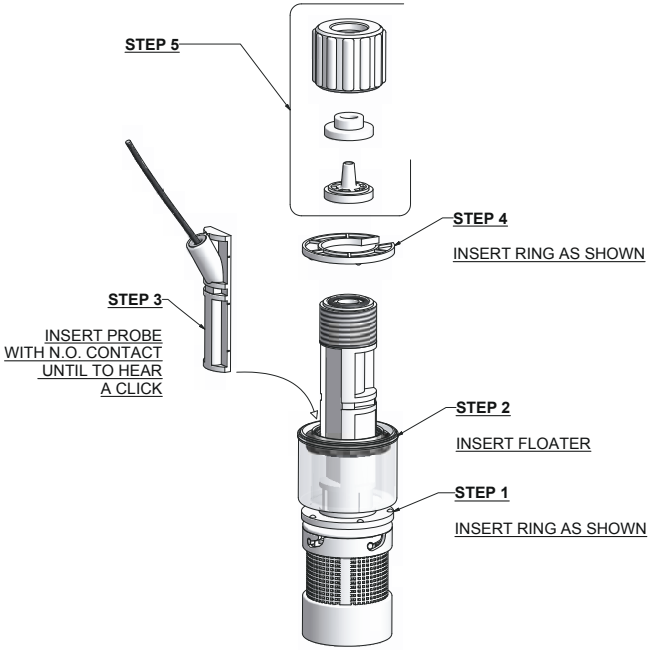

Connect BNC from level probe into pump's level input (front side of the pump).
Put level probe assembled with foot filter into tank's bottom.

Warning: If there is a mixer installed into tank, install a suction lance instead of level probe / foot filter.

6.3 Delivery Hose.

Completely unscrew tightening nut from pump's head and remove assembling components: tightening nut, holding ring and pipe holder.

Assembly as shown in fig. (A). Insert hose into pipe holder until it reaches the bottom.

Lock hose on pump's head by screwing down the tightening nut.
Use only hands to do it!

Connect other side of the hose to the injection valve using the same procedure.

6.4 Injection Valve.

Injection valve must be installed on plant from water's input.
Injection valve will open at pressure greater than 0,3bar.

6.5 Venting hose.

Insert one side of venting hose into venting connector as shown in fig (C).

Insert other side of venting hose into product's tank.
During priming procedure product exceeding will flow into tank.

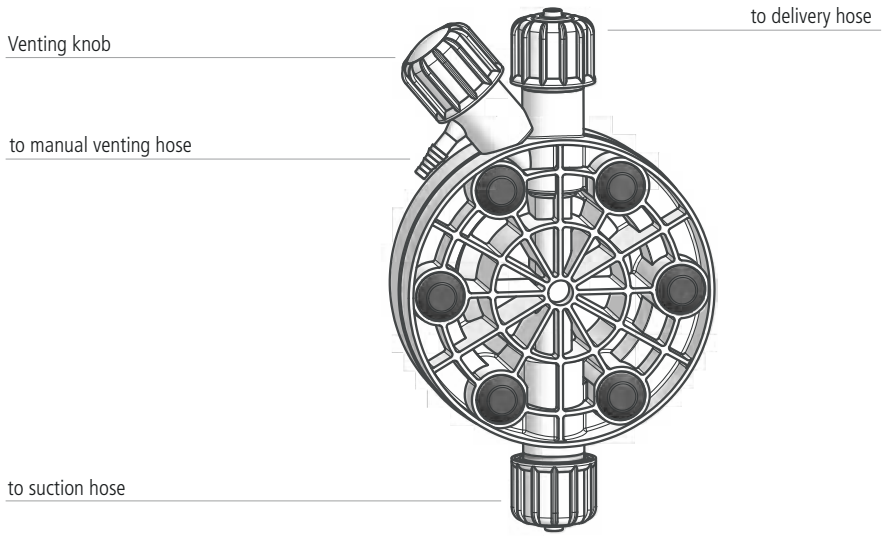

fig (C)

For priming procedure see **PRIMING**.

it's allowed to lightly bend venting hose.

During calibration procedure ("TEST") insert venting hose into BECKER test-tube.

7. Self-Venting pump head installation

Self-venting pump head must be used when using chemicals that produce gas (i.e. hydrogen peroxide, ammonium, sodium hypoclorite at particular conditions).
Refer to fig. 3-4 for delivery and venting hose.
Hoses assembling procedures are the same described before.

Fig. 3. Self-venting models pump head: LA, MA, NA (TMSA).

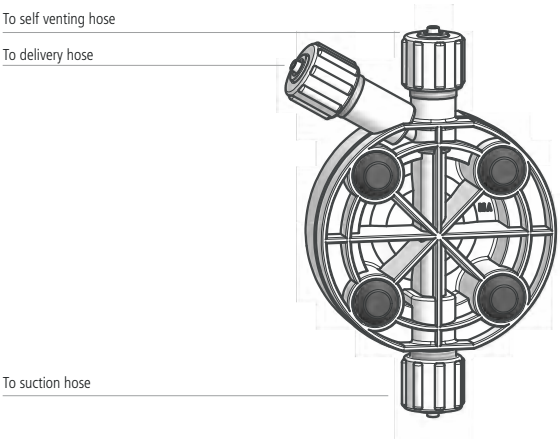

Fig. 4. Self-venting models pump head: SA, TA (TMSA).

ON "SA" AND "TA" MODELS THERE IS A RED THREADING NUT

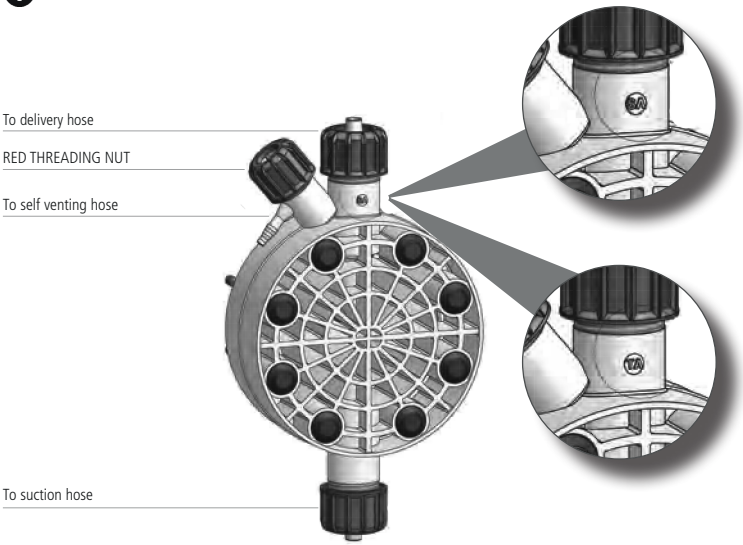

8. Electrical Installation

All electrical connections must be performed by **AUTHORIZED AND QUALIFIED** personnel only.
Before to proceed, please, verify the following steps:

- verify that pump's label values are compatible with main power supply.

- pump must be connected to a plant with a differential switch (0,03A sensitivity) if there isn't a good ground.

- to avoid damages to the pump do not install it in parallel with heavy inductance load (for example: engines). A relay switch must be used. See below picture.

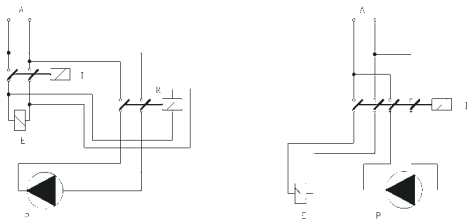

P - Dosing Pump
R - Relay
I - Switch or safety device
E - Electrovalve or inductance load
A - Main Power

Once verified previous steps proceed as follows:

- check that "BNC" of level probe has been connected as described in "Hydraulic Installation" chapter.

- connect "BNC" and external signal to pump's "INPUT" connectors.

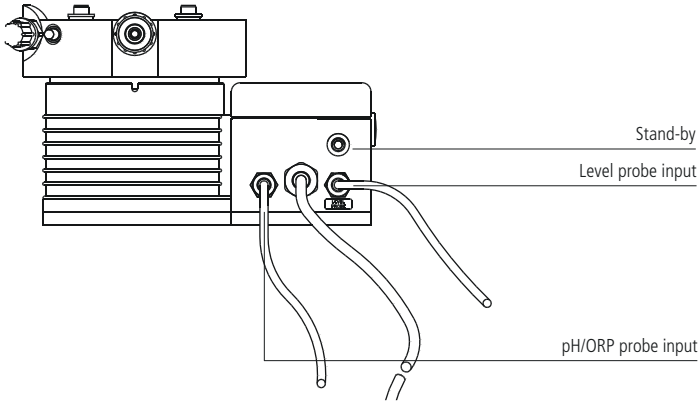

9. Basic settings and Priming procedure

All dosing pumps are equipped with a keyboard that basically works in the same way for any pump's model. To avoid any misunderstanding during this chapter all keys will be described as shown on this legend:

▲ is the "UP" key

▼ is the "DOWN" key

▶ is the "RIGHT" key

E is the "E" key

PRIMING

To prime the pump without touching chemicals please performs these operations:

- connect all hoses into proper places (delivery hose, suction hose and outgassing hose).
- open outgassing valve and turn on the pump.

All air inside the pump head will exit through the outgassing outlet. When product will leak from it, close immediately the outgassing valve. If dosing product is particularly dense, to facilitate the priming, insert on vent pipe a syringe of 20 cc and suck inside.

PROGRAMMING "TMS PH" PUMP

Note: it is possible to program the pump for dosing either acid or alkaline, ensuring that o-rings match the additive chemical compatibility

Entering in program mode

Turn on the pump. Keep pressed "E" key for at least 4 seconds to enter in program mode. Pump's display shows:

PASSWORD:
-> 0000 fig.1

Use "UP" and "DOWN" keys to edit the password, press "RIGHT" to move on next digit.

"SETUP" program

Once entered the password, pump's display shows:

-> SETUP
PARAM fig.2

Move arrow on SETUP then press "E" key:

"SET POINT" program

Setup
1) Point fig.3
Press "E" key:

a)-> 00%
7.30pH fig.4

The display shows that pump does not work at 00% if pH is 7.30. Make sure that arrow is on "7.30 pH" to change this value, then use "UP" and "DOWN" keys to enter a new value. Use "RIGHT" key to move on next value. Once on "00%", change it with "UP" and "DOWN" keys.

b) -> 100%
7.80pH fig.5

The display shows that pump works when pH is 7.80. Make sure that arrow is on "7.80pH" to change this value, then use "UP" and "DOWN" keys to enter a new value. Use "RIGHT" to move on next value. Once on "100%", change it with "UP" and "DOWN" keys. Press "E" key to confirm values and quit from programming mode. Display shows for a few seconds: DATA SAVED. To exit from program mode press "RIGHT" key twice. Now the pump will modify proportionally its own dosing capacity in the range between 7.30pH and 7.80pH. On previous example, dosing mode is for "acid".

Probe calibration

To obtain a reliable measurement it is necessary (during installation) calibrate the probe. To do this, two buffer solutions are needed: a 7.00pH buffer solution and a 4.00pH or 9.00pH buffer solution. Proceed as follows:
1) Measure buffer solution temperature and verify if it is the same printed on solution's label.
2) Insert probe's connector (blue colour) into pump's input connector.
3) Remove protective cap from probe and wash it into water. Then dry it.

Into "Setup" menu (fig.3), choose "2)Calib" then press "E" key. The display shows:

R: 7.20 pH
C: 7.00 pH fig.6

"R" means buffer solution reading value and "C" the calibration to refer to. During the calibration the "R" value could be different from the buffer solution value. Wait a stable reading in "R". Dip probe in a 7.00 pH buffer solution and use "UP" and "DOWN" keys to change the value in "C:" to have buffer solution value. Wait a stable reading in "R:" then press "E" key to confirm this first calibration. Pump will show:

R: 7.00 pH
C: 4.00 pH fig.7

Remove the probe from first buffer solution and repeat the cleaning procedure. Then dip probe into second buffer solution (for example 4.00 pH) and use "UP" and "DOWN" keys to change the value in "C:" to have buffer solution value. Wait a stable reading in "R:" then press "E" key to confirm. The pump will show the new values for a while and will return to main menu.

59mV / pH
- 000 mV fig.8

If calibration process fails the pump will show "PH CALIB FAILED". Not changing any value the program will return to "Calib" mode. To exit press "RIGHT" key twice.

DELAY

In main menu choose "PARAM" (fig.2) and press "E" key. Display shows:

DEL.: ->00
0 0 0 0 fig.9

The -> arrow is on "DEL". This value is pump's waiting time after any start up procedure: pump will wait set time before start dosing every time it is powered on. Use "UP" and "DOWN" keys to change this value. Waiting time may be set from 1 to 60 minutes.

PASSWORD

In main menu choose "PARAM" (fig.2) and press "E" key. Display shows:

DEL.: ->00
0 0 0 0 fig.9

Press "RIGHT" key to move on 0 0 0 0. All new pumps have "0 0 0 0" as default password, use "UP" and "DOWN" keys to change this value. Press "E" to confirm new data. The pump shows the new password for about two seconds then it'll return to main menu. Press "RIGHT" key to leave main menu.

MAXIMUM TIME DOSING ALARM

This alarm prevents the pump to dose if a set time is reached. To set this alarm enter into "Setup menu" as shown in fig.3. Use "DOWN" key to choose "3) Alarm" and press "E" key. The pump shows:

-> AL OFF
DOSING fig.10

To activate the alarm use "UP" or "DOWN" keys to set the time (from 1 to 100 minutes or "AL OFF"). To setup the alarm mode use the "RIGHT" key. Cursor moves on "DOSING". Use "UP" or "DOWN" keys to change this voice. On "STOP" mode the pump will stop the dosing procedure once the set time is reached. The pump's display will show the alarm condition and requires to press a key to continue. On "DOSING" mode the pump will NOT stop the dosing procedure once the set time is reached. The pump's display will show the alarm condition and requires to press a key to continue.

Special functions

- Keep pressed the "UP" key to turn off the pump. Display shows "OFF" and it will switch off. Keeping pressed the "UP" key the pump will switch on.

- Keep pressed the "DOWN" key to read on display the power supply input.

- Keep pressed the "E" key for manual dosing.

- Pump's reset: turn off the pump, keep pressed "UP" and "DOWN" keys then turn on the pump. Release "UP" and "DOWN" keys and proceed to pump's set-up. This procedure will return the pump to its shipment condition.

PROGRAMMING "TMS RH" PUMP

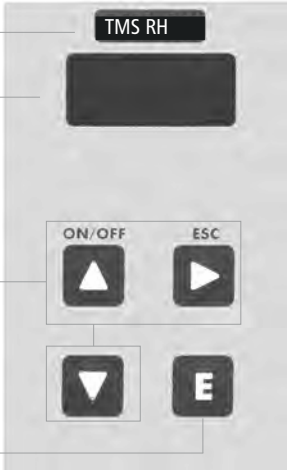

Note: it is possible to program the pump for dosing either oxidant or anti-oxidant, ensuring that o-rings match the additive chemical compatibility

Turn on the pump. Keep pressed "E" key for at least 4 seconds to enter in program mode. Pump's display shows:

PASSWORD :
-> 0000 fig.1

Use "UP" and "DOWN" keys to edit the password, press "RIGHT" to move on next digit.

"SETUP" program

Once entered the password, pump's display shows:

-> SETUP
PARAM fig.2

Move arrow on "SETUP" then press the "E" key:

"SET POINT" program

Setup
1) Point fig.3

Press "E", the display will show:

a) ->100%
650mV fig.4

The pump works at 100% of its capacity if ORP value is 650mV. Make sure that arrow is on "650mV" to change it and then use "UP" and "DOWN" keys to enter a new value. Use "RIGHT" key to move on next digit. Move arrow on 100% and change using the "UP" and "DOWN" keys.

b)-> 00%
700mV fig.5

The display shows that pump stops when ORP is 700mV. Make sure that arrow is on 700mV to change this value then use "UP" and "DOWN" keys to enter a new value. Use "RIGHT" key to move on next digit. Move arrow on 100% and change using the "UP" and "DOWN" keys. Press "E" key to confirm values and quit from programming mode. Display shows for a few seconds: DATA SAVED. Pump will change proportionally its dosing capacity between 650mV and 700mV. Now the pump will modify proportionally its own dosing capacity in range between 650mV and 700mV. In previous example pump will dose "chlorine".

Probe calibration

To obtain a reliable measurement it is necessary (during installation) calibrate the probe. To do this, a known buffer solutions is needed. Proceed as follows:
1) Measure buffer solution temperature and verify if it is the same printed on solution's label.
2) Insert probe's connector (blue color) into pump's input connector.
3) Remove protective cap from probe and wash it into water. Then dry it.
Into "Setup" menu (fig.3), choose "2)Calib" then press "E" key. The display shows:

R: 600 mV
C: 650 mV fig,6

"R" means buffer solution reading value and "C" the calibration to refer to. During the calibration the "R" value could be different from the buffer solution value. Wait a stable reading in "R". Dip probe in a 650mV buffer solution and use "UP" and "DOWN" keys to change the value in "C": to have buffer solution value. Wait a stable reading in "R:" then press "E" key to confirm. Display shows probe's data before to return at main menu. If calibration process fails the pump will show "MV CALIB FAILED". Not changing any value the program will return to "Calib" mode. To exit press "RIGHT" key twice.

DELAY

In main menu choose "PARAM" (fig.2) and press "E" key. Display shows:

DEL.: -> 00
0 0 0 0 fig.9

The -> arrow is on "DEL". This value is pump's waiting time after any start up procedure: pump will wait set time before start dosing every time it is powered on. Use "UP" and "DOWN" keys to change this value. Waiting time may be set from 1 to 60 minutes.

PASSWORD

In main menu choose "PARAM" (fig.2) and press "E" key. Display shows:

DEL.: -> 00
0 0 0 0 fig.9

Press "RIGHT" key to move on 0 0 0 0. All new pumps have "0 0 0 0" as default password, use "UP" and "DOWN" keys to change this value. Press "E" to confirm new data and "RIGHT" to exit from programming mode.

MAXIMUM TIME DOSING ALARM

This alarm prevents the pump to dose if a set time is reached. To set this alarm enter into "Setup menu" as shown in fig.3. Use "DOWN" key to choose "3) Alarm" and press "E" key. The pump shows:

-> AL OFF
DOSING fig.10

To activate the alarm use "UP" or "DOWN" keys to set the time (from 1 to 100 minutes or "AL OFF"). To setup the alarm mode use the "RIGHT" key. Cursor moves on "DOSING". Use "UP" or "DOWN" keys to change this voice. On "STOP" mode the pump will stop the dosing procedure once the set time is reached. The pump's display will show the alarm condition and requires to press a key to continue. On "DOSING" mode the pump will NOT stop the dosing procedure once the set time is reached. The pump's display will show the alarm condition and requires to press a key to continue.

Special functions

- Keep pressed the "UP" key to turn off the pump. Display shows "OFF" and it will switch off. Keeping pressed the "UP" key, the pump will switch on.

- Keep pressed the "DOWN" key to read on display the power supply input.

- Keep pressed the "E" key for manual dosing.

- Pump's reset: turn off the pump, keep pressed "UP" and "DOWN" keys then turn on the pump. Release "UP" and "DOWN" keys and proceed to pump's set up. This procedure will return the pump to its shipment condition.

PUMP'S MESSAGES

During normal operating mode, the pump may show some messages.

Message: "LOW VOLT"
Description: The pump is low voltage powered. Check main power.

Message: "HIGH VOL"
Description: The pump is high voltage powered. Check main power.

Message: "LOW LEVEL"
Description: Product to dose is near to end. Verify the tank.

Message: "STAND-BY"
Description: The pump is waiting (a specified time) to become operative. See related chapter to set this function.

Message: "DOSING" or "AL OFF".
Description: "Max time dosing" alarm. See related chapter to set this function.

Message: "DATA SAVED"
Description: Entered data are succesfully saved.

Message: "CALIB ERROR"
Description: Calibration error. Repeat calibration procedure.

13. Troubleshooting

Problem	Possible Cause
Pump doesn't turn on.	Pump isn't powered. Connect it to main supply. Pump's protection fuse is broken. Replace it. See page 22 for replacement procedure. Pump's main board is broken. Replace it. See page 22 for replacement procedure.
Pump is not dosing and solenoid is operating.	The foot filter is obstructed. Clean it. Suction hose is empty. Pump must be primed. Repeat priming procedure. Air bubbles inside hydraulic circuit. Check valves - hoses - fittings. Product to dose is generating gas. Turn venting knob and let air flow away. Use a self-venting pump head.
Pump is not dosing and solenoid isn't operating or slightly operating.	Crystals presence inside valves. Check them and try to dose 2-3 liters of normal water. Change valves. Injection valve obstructed. Change it.

14. Fuse and main board replacement

Fuse or main board replacement is allowed to qualified personnel only. Before to operate disconnect the pump from main power and all hydraulic connections.

For fuse replacement is necessary to use a 3x16 and 3x15 screwdriver and a new fuse (same model of old one).

For main board replacement is necessary to use a 3x16 and 3x15 screwdriver and a new main board (same model of old one).

Fuse replacement procedure:

- Remove 8 screws from pump's back.
- Pull pump's back cover until it's completed separated from pump's front.
- Locate the blown fuse and replace with another one having same rating.
- Reassemble the pump.
- Reinsert screws.

Main board replacement procedure:

- Remove 8 screws from pump's back.
- Pull pump's back cover until it's completed separated from pump's front.
- Remove board's screws.
- Completely disconnect wires from main board and replace it. Reinsert screws.
- Reconnect wires to the main board (see enclosed picture).
- Reassemble the pump.
- Reinsert screws.

"TMS PH"
"TMS RH"

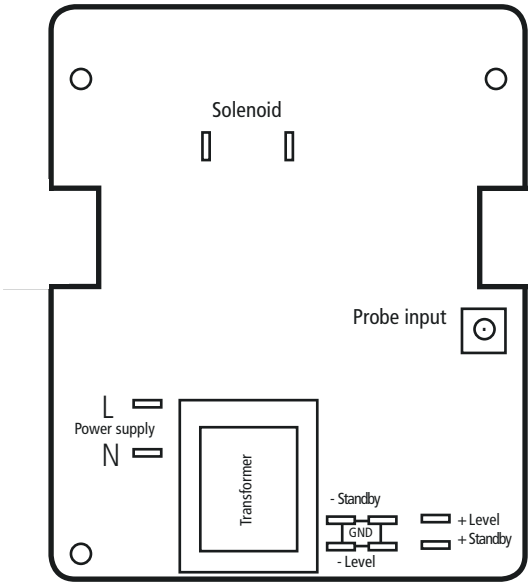
Solenoid
Probe input
L
Power supply
N
Transformer
- Standby
GND
- Level
+ Level
+ Standby

Maintenance schedule

In order to ensure the requirements of potable drinking water treated and the maintenance of the improvements as declared by the manufacturer, this equipment must be checked at least once a month.

OPERATOR PROTECTION
Use safety equipment according to the company regulations.
Use this safety equipment within the work area during installation, service and when handling chemicals:
- **protective mask**
- **protective gloves**
- **safety goggles**
- **ear plugs or hear muffs**
- **further security device, if necessary.**

POWER SUPPLY DISCONNECTION
Always disconnect power to the motor before you perform any installation or maintenance tasks. Failure to disconnect power will result in serious physical injury.

Installation and maintenance tasks should be carried out by AUTHORIZED AND QUALIFIED PERSONNEL only in accordance with local regulations.

Use original spare parts.

Maintenance inspection

Shutdown the dosing pump before any maintenance operation **Shutdown procedure.**

A maintenance schedule includes these types of inspections:
- Routine maintenance and inspections
- Three-month inspections
- Annual inspections

Shorten the inspection intervals appropriately if the pumped chemical is abrasive or corrosive.

Routine maitenance and inspections
Perform these tasks whenever you perform routine maintenance:
- Inspect the seal. Ensure that there are no leaks from the mechanical seal.
- Check electrical wiring
- Check for unusual noise and vibration (noise allowed 73 dbA; ± 5 dB).
- Check the pump and piping for leaks.
- Check for corrosion on parts of the pump and / or on hoses.

Three-month inspections
Perform these tasks every three months:
- Check that the tightenings.
- Check the mechanical seal if the pump has been left idle.

Annual inspections
Perform these inspections one time each year:
- Check the pump capacity (as per nameplate).
- Check the pump pressure (as per nameplate).
- Check the pump power (as per nameplate).

f the pump performance does not satisfy your process requirements, and the process requirements have not changed, then perform these steps:
1. Disassemble the pump.
2. Inspect it.
3. Replace worn parts.

Shutdown procedure

This procedure SHOULD BE CARRIED OUT BY AUTHORIZED AND QUALIFIED PERSONNEL

OPERATOR PROTECTION
Use safety equipment according to the company regulations.
Use this safety equipment within the work area during installation, service and when handling chemicals:
- **protective mask**
- **protective gloves**
- **safety goggles**
- **ear plugs or hear muffs**
- **further security device, if necessary.**

Shutdown the dosing pump **before any maintenance operation** or **before long downtimes**. Disconnect power and ensure it cannot be restarted.

Depressurize the system. The liquid may leak splashing.

Drain the chemical from pump head.
Release the pressure and disconnect the disharge pipe from the discharge valve.
Rinse the pump head and clean all valves.

TECHNICAL FEATURES

Power supply:	230 VAC (180-270 VAC) - 50/60 Hz
Power supply:	115 VAC (90-135 VAC) - 50/60 Hz
Power supply:	24 VAC (20-32 VAC) - 50/60 Hz
Power supply:	12 VDC (10-16 VDC)
Pump Strokes:	0 ÷ 120
Suction Height:	1,5 metres (5ft)
Environment Temperature:	0 ÷ 45°C (32 ÷ 113°F)
Chemical Temperature:	0 ÷ 50°C (32 ÷ 122°F)
Installation Class:	II
Pollution Level:	2
Audible Noise:	73dbA
Packaging and Transporting Temperature:	-10÷+50°C (14 ÷ 122°F)
Max operating altitude:	2000m
Protection Degree Rating:	IPX0

MANUFACTURING MATERIALS

Case:	PP
Pump head:	PVDF (standard), PP, PMMA, SS *
Diaphragm:	PTFE
Balls:	CERAMIC, GLASS, PTFE, SS *
Suction Pipe	PVC/PE **
Delivery Pipe:	PVDF
O-ring:	FP, EP, WAX, SI, PTFE *
Level Probe:	PVDF
Level probe cable:	PE
Foot Filter:	PVDF

*as ordered.
** according with pump's model.

INFORMATION												
TMS	**FLOW**				**cc per stroke**	**Max pressure**		**Ampere peak (A)**		PVDF delivery hose	Suction hose	Pump head
	min cc/h	max l/h	Min GPH	Max GPH	**Max**	**bar**	**PSI**	230 VAC	115 VAC			
2005	0,7	5	0,0001	1,32	0,7	20	290	1,6	3,2	4 x 6	4 x 6	L
0515	2,1	15	0,0005	3,96	2,1	5	73	1,6	3,2	6 x 8	6 x 8	N
0420	2,8	20	0,00074	5,28	2,8	4	58	1,6	3,2	6 x 8	6 x 8	N
0330	4,2	30	0,0011	7,93	4,2	3	43	1,6	3,2	8 x 10	8 x 12	S
0150	7	50	0,0018	13,2	7	1	15	1,6	3,2	8 x 10	8 x 12	S
00100	14	100	0,0037	26,4	14	0	0	1,6	3,2	12 x 18 PVC renforced	12 x 18 PVC renforced	T
TMSA	**FLOW**				**cc per stroke**	**Max pressure**		**Ampere peak (A)**		PVDF delivery hose	Suction hose	Pump head
	min cc/h	max l/h	Min GPH	Max GPH	**Max**	**bar**	**PSI**	230 VAC	115 VAC			
203,2	0,44	3,2	0,0001	0,85	0,44	20	290	1,6	3,2	4 x 6	4 x 6	LA
0510	1,39	10	0,0004	2,64	1,39	5	73	1,6	3,2	6 x 8	6 x 8	NA
0413	1,80	13	0,0005	3,43	1,80	4	58	1,6	3,2	6 x 8	6 x 8	NA

Pump head mod. L

20 05

l/h 05

bar 20

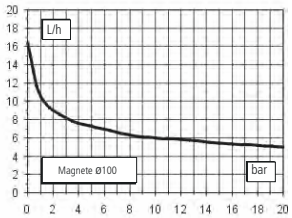

Pump head mod. L

05 15

l/h 15

bar 05

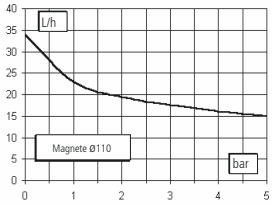

Pump head mod. N

04 20

l/h 20

bar 04

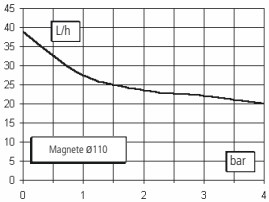

Pump head mod. S

03 30

l/h 30

bar 03

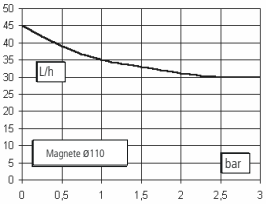

Pump head mod. S

01 50

l/h 50

bar 01

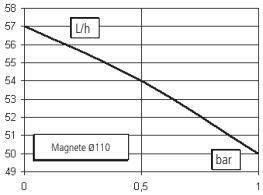

Pump head mod. T

00 100

l/h 100

bar 0

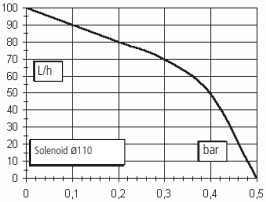

Flow rate indicated is for H_2O at 20°C at the rated pressure.
Dosing accuracy ± 2% at constant pressure ± 0,5 bar.

Pump head mod. LA

20 3,2

l/h 3,2

bar 20

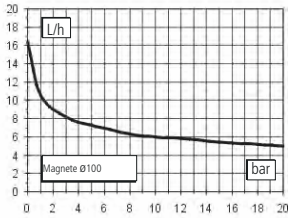

Pump head mod. LA

05 10

l/h 10

bar 05

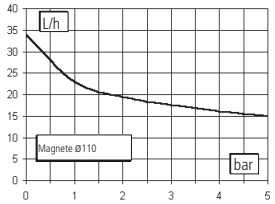

Pump head mod. NA

04 13

l/h 13

bar 04

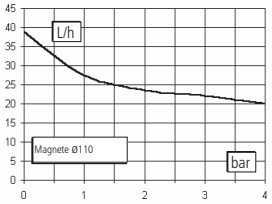

Flow rate indicated is for H_2O at 20°C at the rated pressure.
Dosing accuracy ± 2% at constant pressure ± 0,5 bar.

Unit value: mm

PUMP HEAD “S” - “T”

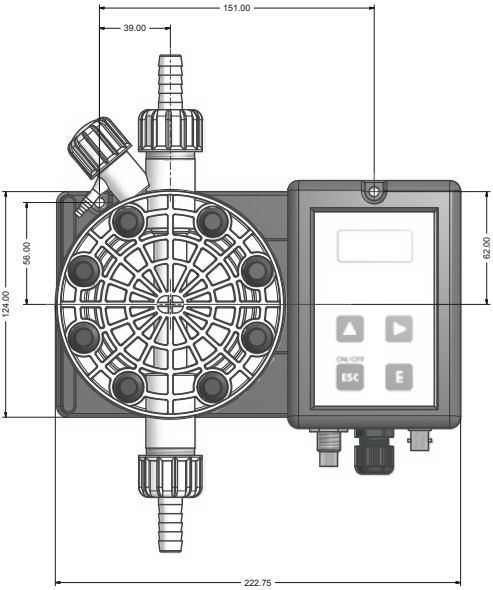

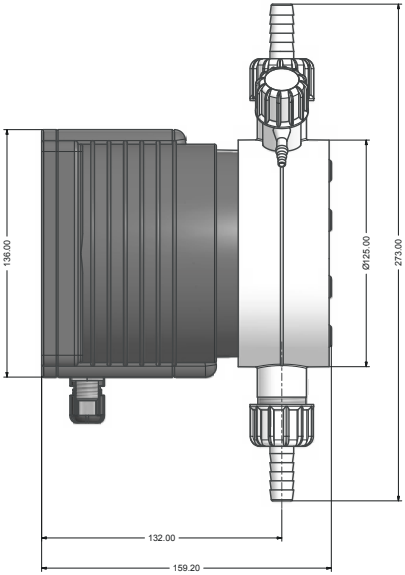

PUMP HEAD “N” - “P”

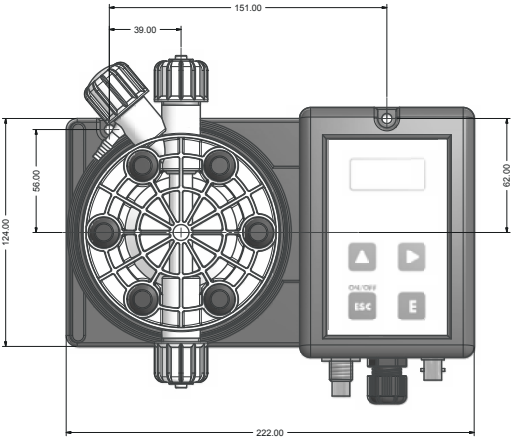

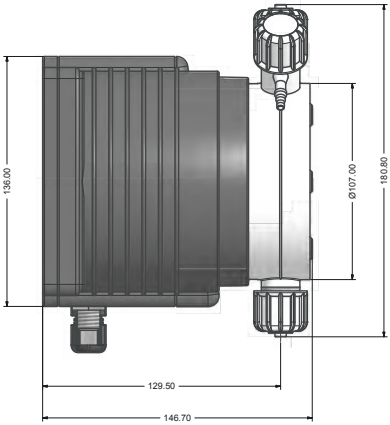

E Appendix. Chemical Compatibility Table

Chemical compatibility table

Solenoid driven metering pumps are widely used to dose chemical fluids and it is important that the most suitable material in contact with fluid is selected for each application. This compatibility table serves as a useful help in this respect. All the informations in this list are verified periodically and believed to be correct on the date of issuance. All the informations in this list are based on manufacturer's data and its own experience but since the resistance of any material depends by several factors this list is supplied only as an initial guide, in no way manufacturer makes warranties of any matter respect to the informations provided in this list.

Tab. 1. Chemical compatibility table.

Product	Formula	Ceram.	PVDF	PP	PVC	SS 316	PMMA	Hastel.	PTFE	FPM	EPDM	NBR	PE
Acetic Acid, Max 75%	CH3COOH	2	1	1	1	1	3	1	1	3	1	3	1
Hydrochloric Acid, Concentrate	HCl	1	1	1	1	3	1	1	1	1	3	3	1
Hydrofluoric Acid 40%	H2F2	3	1	3	2	3	3	2	1	1	3	3	1
Phosphoric Acid, 50%	H3PO4	1	1	1	1	2	1	1	1	1	1	3	1
Nitric Acid, 65%	HNO3	1	1	2	3	2	3	1	1	1	3	3	2
Sulphuric Acid, 85%	H2SO4	1	1	1	1	2	3	1	1	1	3	3	1
Sulphuric Acid, 98.5%	H2SO4	1	1	3	3	3	3	1	1	1	3	3	3
Amines	R-NH2	1	2	1	3	1	-	1	1	3	3	1	1
Sodium Bisulphite	NaHSO3	1	1	1	1	2	1	1	1	1	1	1	1
Sodium Carbonate (Soda)	Na2CO3	2	1	1	1	1	1	1	1	2	1	1	1
Ferric Chloride	FeCl3	1	1	1	1	3	1	1	1	1	1	1	1
Calcium Hydroxide (Slaked Lime)	Ca(OH)2	1	1	1	1	1	1	1	1	1	1	1	1
Sodium Hydroxide (Caustic Soda)	NaOH	2	1	1	1	1	1	1	1	2	1	2	1
[1] Calcium Hypochlor.(Chlor. ted Lime)	Ca(OCl)2	1	1	1	1	3	1	1	1	1	1	3	1
Sodium Hypochlorite, 12.5%	NaOCl + NaCl	1	1	2	1	3	1	1	1	1	1	2	2
Potassium Permanganate, 10%	KMnO4	1	1	1	1	1	1	1	1	1	1	3	1
Hydrogen Peroxide, 30% (Perydrol)	H2O2	1	1	1	1	1	3	1	1	1	3	3	1
Aluminium Sulphate	Al2(SO4)3	1	1	1	1	1	1	1	1	1	1	1	1
Copper-II-Sulphate (Roman Vitriol)	CuSO4	1	1	1	1	1	1	1	1	1	1	1	1

[1] Calcium Hypochlor.(Chlor.ted Lime): WQA test was based on 1% Calcium Hypochlorite solution.

1 - Good resistance rating
2 - Fairly resistance rating
3- Not resistant

Materials

Polyvinyldene fluoride (PVDF) .....Pump heads, Valves, Fittings
Polypropylene (PP).....Pump heads, Valves, Fittings
PVC .....Pump heads
Stainless steel (SS 316).....Pump heads, Valves
Polymethyl Metacrilate Acrylic (PMMA) ...Pump heads
Polytetrafluoroethylene (PTFE) .....Diaphragm
Fluorocarbon (FPM).....O-ring
Ethylene propylene (EPDM).....O-ring
Nitrile (NBR).....O-ring

F Appendix. Hoses resistance table

Hose features are very important for a reliable dosage. Every pump's model is made to work in the best way using selected hoses according to pump's capacity / model. Information reported here are intended for standard use only. For extended information ask to hose's manufacturer.

Suction / Delivery Hose			
4x6 mm PVC (transparent)	4x8 mm PE (opaque)	6x8 mm PE (opaque)	8x12 mm PVC (transparent)

Delivery Hose	Working Pressure				Breaking Pressure			
4x6 mm PE 230 (opaque)	20°C 12 bar	30°C 10.5 bar	40°C 8.5 bar	50°C 6.2 bar	20°C 36 bar	30°C 31.5 bar	40°C 25.5 bar	50°C 18.5 bar
4x8 mm PE 230 (opaque)	20°C 19 bar	30°C 15.7 bar	40°C 12 bar	50°C 7.5 bar	20°C 57 bar	30°C 47 bar	40°C 36 bar	50°C 22.5 bar
6x8 mm PE 230 (opaque)	20°C 8.6 bar	30°C 6.8 bar	40°C 4.8 bar	50°C 2.3 bar	20°C 26 bar	30°C 20.5 bar	40°C 14.5 bar	50°C 7 bar
8x12 mm PE 230 (opaque)	20°C 12 bar	30°C 10.5 bar	40°C 8.5 bar	50°C 6.2 bar	20°C 36 bar	30°C 31.5 bar	40°C 25.5 bar	50°C 18.5 bar

4x6 mm PVDF Flex 2800 (opaque)	20°C 40 bar	30°C 34 bar	40°C 30 bar	50°C 27 bar	60°C 24.8 bar	80°C 20 bar	90°C 10 bar
6x8 mm PVDF Flex 2800 (opaque)	20°C 29 bar	30°C 25.5 bar	40°C 22 bar	50°C 20 bar	60°C 18 bar	80°C 14.5 bar	90°C 7.3 bar
8X10 mm PVDF Flex 2800 (opaque)	20°C 18 bar	30°C 15.5 bar	40°C 13.5 bar	50°C 12.5 bar	60°C 11.2 bar	80°C 9 bar	90°C 4.5 bar

¼ PE 230 (opaque)	20°C 17.6 bar
⅜ PE 230 (opaque)	20°C 10.6 bar
½ PE 230 (opaque)	20°C 10.6 bar

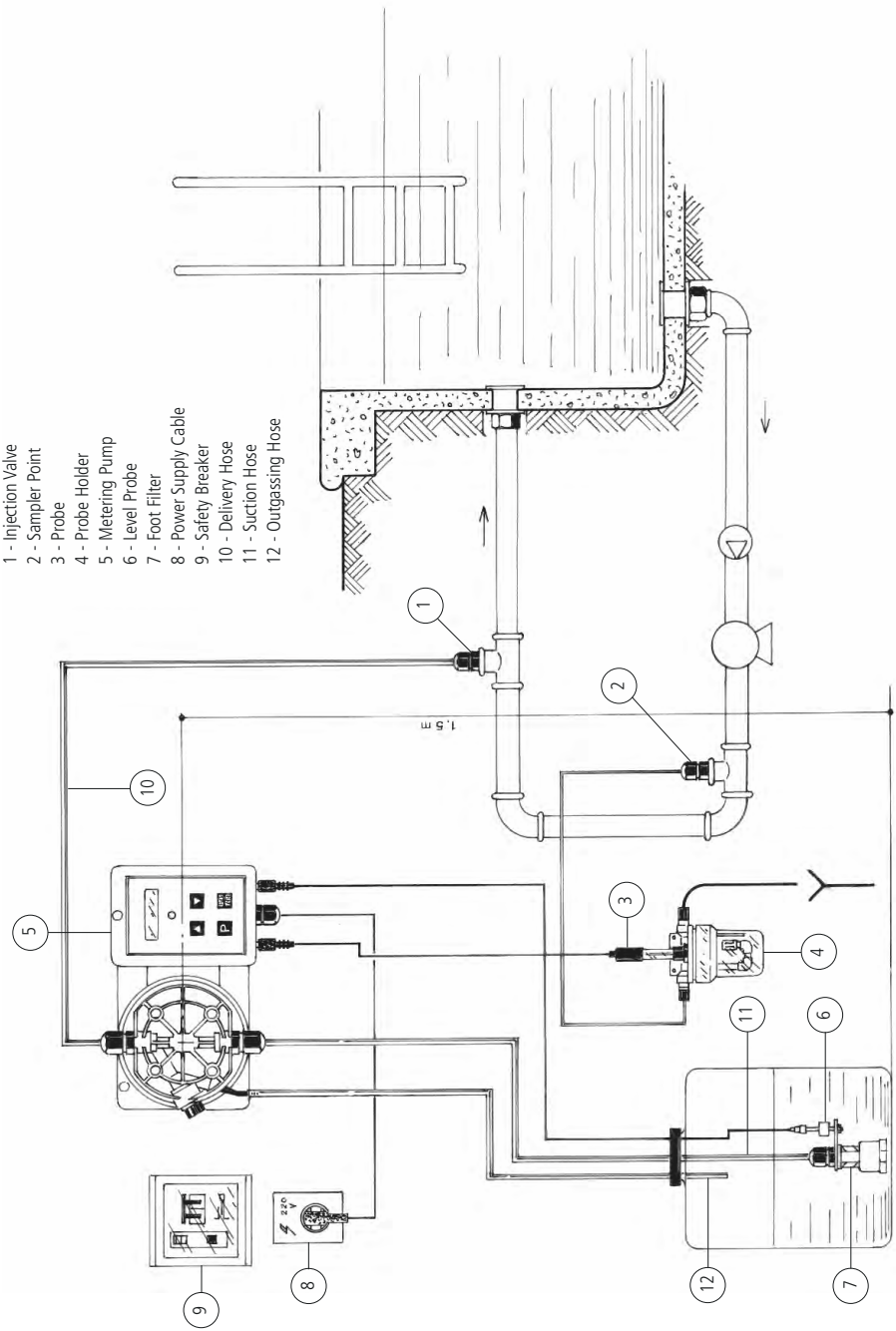
1 - Injection Valve
2 - Sampler Point
3 - Probe
4 - Probe Holder
5 - Metering Pump
6 - Level Probe
7 - Foot Filter
8 - Power Supply Cable
9 - Safety Breaker
10 - Delivery Hose
11 - Suction Hose
12 - Outgassing Hose
1.5 m
220 V

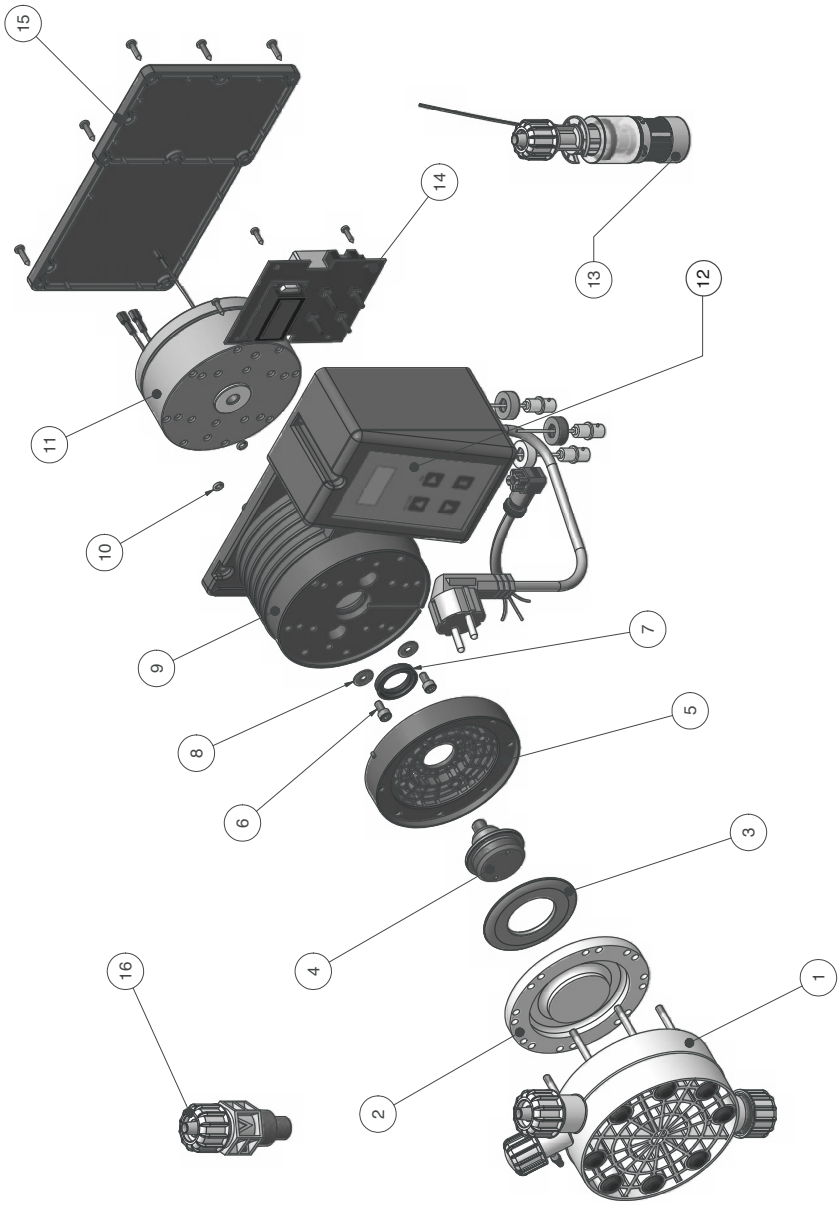
15
14
13
12
11
10
9
8
7
6
5
4
3
2
1
16

Index

GENERAL SAFETY GUIDELINES 3
PURPOSE OF USE AND SAFETY 4
ENVIRONMENTAL SAFETY 5
LABELS 5
SPARE PARTS 5

1. Introduction 7
2. Unpacking 8
3. Pump's description 9
4. Before to Install warnings 10
5. Installation draw 11
6. Hydraulic installation 12
7. Self-Venting pump head installation 15
8. Electrical Installation 16
9. Basic settings and Priming procedure 18
10. Programming the pump TMS PH 19
11. Programming the pump TMS RH 22
12. Pump's messages 25
13. Troubleshooting 26
14. Fuse and main board replacement 27
15. Main Board 28
A Appendix. Maintenance 29
B Appendix. Construction Materials and Technical info 31
C Appendix. Delivery Curves 32
C Appendix. Self-Venting delivery curves 33
D Appendix. Dimensions 34
E Appendix. Chemical Compatibility Table 35
F Appendix. Hoses resistance table 36
I Appendix. Exploded view mod. TMS/TMSA 38

PRECAUTIONS RELATING TO DIRECTIVES, REGULATIONS AND STANDARDS

§ CE/EU and UKCA marking

We guarantees that this product meets the essential requirements of the applicable Directives and Regulations based on the following specifications. Please carefully consider the following specifications for use of the product in European Union member countries and the United Kingdom.

• CE/EU harmonized directives and standards

Directives
DIRECTIVE 2006/42/EC
DIRECTIVE 2014/35/EU
DIRECTIVE 2014/30/EU
DIRECTIVE 2011/65/EU
DELEGATED DIRECTIVE (EU) 2015/863

Harmonized standards
EN ISO 12100
EN 809
EN ISO 20361
EN IEC 61326-1
EN 61010-1
EN IEC 63000

• UKCA harmonized regulations and standards

Regulations
2008 No. 1597
2008 2016 No. 1091
2016 No. 1101
2012 No. 3032

Harmonized standards
BS EN ISO 12100
BS EN 809
BS EN ISO 20361
BS EN IEC 61326-1
BS EN 61010-1
BS EN IEC 63000

Disposal of end-of-life equipment by users

This symbol warns you not to dispose of the product with normal waste. Respect human health and the environment by giving the discarded equipment to a designated collection center for the recycling of electronic and electrical equipment. For more information visit the online site.

When dismantling a pump please separate material types and send them according to local recycling disposal requirements. We appreciate your efforts in supporting your local Recycle Environmental Program. Working together we'll form an active union to assure the world's invaluable resources are conserved.