R990525

# T - TA - T AC

PRODUCT LABEL

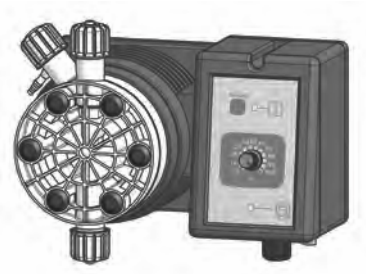

T

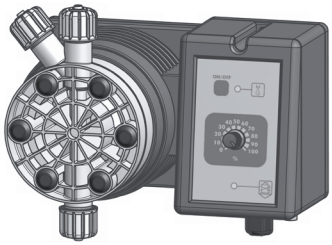

TA

T AC

SOLENOID DRIVEN METERING PUMPS
WITH DIAPHRAGM

EN

OPERATING MANUAL

This operating instructions contains safety information that if ignored can endanger life or result in serious injury.

Read these instructions **carefully** before use and keep them for future reference. The original instruction is in Italian. All non-Italian instructions are translations of the original instruction.

Information and specifications on this manual could be uncorrect or could have printing errors. Specifications are subject to change without notice.

Version: R1-02-15

**NORME CE**
**EC RULES (STANDARD EC)**
**NORMAS DE LA CE**

Direttiva Bassa Tensione
Low Voltage Directive
Directiva de baja tensión
} **2014/35/UE**

Direttiva EMC Compatibilità Elettromagnetica
EMC electromagnetic compatibility directive
EMC directiva de compatibilidad electromagnética
} **2014/30/UE**

Norme armonizzate europee nell'ambito della direttiva
European harmonized standards underdirective
Las normas europeas armonizadas conforme a la directiva
} **2006/42/CE**

## GENERAL SAFETY GUIDELINES

Operating, installing, or maintaining the unit in any way that is not covered in this manual could cause death, serious personal injury, or damage to the equipment.

**ICON**

This manual use the following safety message icon:

**Danger!**
Indicates a hazardous situation which, if not avoided, will result in death or serious injury.

**Warning!**
Indicates a hazardous situation which, if not avoided, could result in death or serious injury.

**Important** - A practice not related to personal injury or additional information.

**Cross reference** - An instance which refers to related information elsewhere in the same document

**PURPOSE OF USE AND SAFETY**

**METERING PUMP IS INTENDED FOR CHEMICAL DOSING AND DRINKING WATER TREATMENT.**

Do not use in explosive area (EX).
Do not use with flammable chemicals.
Do not use with radioactive chemicals.

Use after a proper installation.

Use the pump in accordance with the data and specifications printed on the label.

Do not modify or use in a manner inconsistent with the provisions of the operating manual.

**Keep the pump protected from sun and water. Avoid water splashes.**

**In emergencies the pump should be switched off immediately. Disconnect the power cable from the power supply.**

**When using pump with aggressive chemicals observe the regulations concerning the transport and storage of aggressive fluids.**

**When installing always observe national regulations.**

**Manufacturer is not liable for any unauthorized use or misuse of this product that may cause injury, damage to persons or materials.**

**Pump must be accessible at all times for both operating and servicing. Access must not be obstructed in any way.**

**Feeder should be interlocked with a no-flow protection device.**

**Pump and accessories must be serviced and repaired by qualified and authorized personnel only.**

**Before any operation:**
- **always read chemical Material Safety Data Sheet (MSDS);**
- **always wear protective clothing;**
- **always discharge the liquid end before servicing the pump.**
- **empty and rinse the liquid end before work on a pump which has been used with hazardous or unknown chemicals.**

**This equipment requires regular maintenance to ensure potability requirements of the water and maintenance of improvements as declared by the manufaturer.**

**ENVIRONMENTAL SAFETY**

**Work area**
Always keep the pump area clean to avoid and/or discover emissions.

**Recycling guidelines**

**EWC code: 16 02 14**

Always recycle according to these guidelines:
1. If the unit or parts are accepted by an authorized recycling company, then follow local recycling laws and regulations.
2. If the unit or parts are not accepted by an authorized recycling company, then return them to the nearest representative.

**Waste and emissions regulations**
Observe these safety regulations regarding waste and emissions:
- Dispose appropriately of all waste.
- Handle and dispose of the dosed chemical in compliance with applicable environmental regulations.
- Clean up all spills in accordance with safety and environmental procedures.
- Report all environmental emissions to the appropriate authorities.

**LABELS**

Fig. 1. Product label.

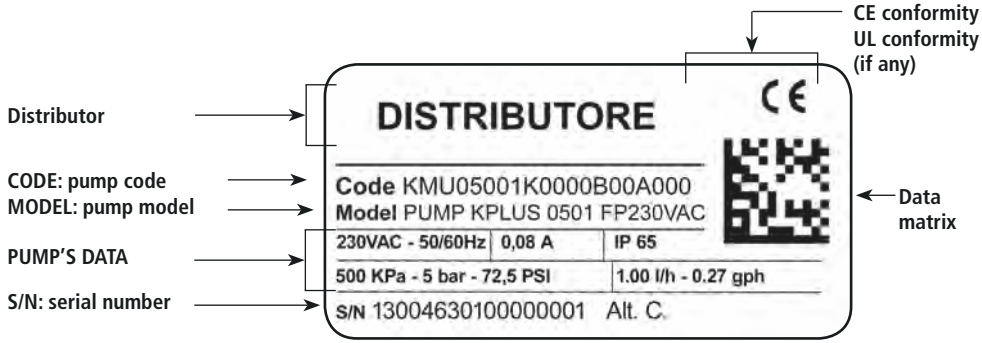


**Spare parts**

For spare parts orders or any other communication, refer to product label.
Code (CODE) and serial number (S / N) uniquely identify the pump.

**Transportation and storage**

**A not suitable transportation or storage can cause damages.**

**Use origianal box to pack the pump.**

**Observe storage conditions also for transportation.**

**Although packed, always protect the unit against humidity and the action of chemicals.**

**Before return the dosing pump to the manufacturer Repair service, drain the chemical from pump head and rinse it. Refer to** **Shutdown procedure.**

Fill the PRODUCT SERVICE REPAIR FORM and send it with the dosing pump.
Repair service is not accepted if PRODUCT SERVICE REPAIR FORM is missing.

DO NOT TRASH PACKAGING. USE IT TO RETURN THE PUMP.

Transportation and storage temperature ..... 10 - 50°C (32 - 122°F)
Umidity ..... 95% relative humidity (not condensed)

# 1. Introduction

Introduction:

Metering Pumps "T" Series are the ideal solution for low / middle dosing of chemicals. All control and setup parameters are available through knobs and a visual system (led).
Metering Pumps "T" Series have got an On/Off digital switch for ensure dosing activity (available only for some models).

| | |
|---|---|
| T | metering pumps with manual venting PVDF pump head |
| TA | metering pumps with self venting PVDF pump head |
| T AC | metering pumps with manual venting pump head and compressed air + 230VAC power supply |

Pump's capacity

Flow rate is determined by the stroke speed.
The stroke speed is adjustable from 0 to 100% using the stroke adjustment knob.
However dosing accuracy is guarantee within an adjustment range from 30% to 100%.
The led on the frontal panel shows the activity status of the pump.

Models:

| SERIES | MOD. | DESCRIPTION |
|---|---|---|
| T - TA - TAC | CO | Constant pump with stroke speed (frequency) adjustment |
| | CL | Constant pump with level control, stroke speed (frequency) adjustment |
| | IS | Constant-proportional pump driven by external digital signal with level control: to each external pulse correspond one pump stroke |
| | PV | Constant-proportional pump driven by external digital signal with pulse divider mode (ratio 1 to 1000) and level control |
| | PVM | Constant-proportional pump driven by external digital signal, level control , with pulse divider mode (ratio 1 to 100) and multiplier mode (ratio 1 to 10) |
| | IC | Constant-proportional pump driven by current signal (0/4mA = 0 pulses; 20mA = max pulses) and level control |
| | TE | (0"-60") timered pump with external digital signal and level control |

**Capacity T**

| Pressure bar | Flow l/h |
|---|---|
| 20 | 05 |
| 05 | 15 |
| 04 | 20 |
| 03 | 30 |
| 01 | 50 |
| 00 | 100 |

**Capacity TA**

| Pressure bar | Flow l/h |
|---|---|
| 20 | 3,2 |
| 05 | 10 |
| 04 | 13 |
| 03 | 20 |
| 01 | 35 |

**Capacity T AC**

| Pressure bar | Flow l/h |
|---|---|
| 10 | 50 |
| 05 | 150 |
| 00 | 230 |

# 2. Unpacking

Included into package:

| | |
|---|---|
| n.2 | Dibbles ø6 |
| n.2 | Self tapping screws 4,5 x 40 |
| n.1 | Delayed fuse 5 X 20 |
| n.1 | Level probe with axial foot filter (PVDF) |
| n.1 | Injection valve |
| m 2 | Delivery pipe (PVDF) |
| m 2 | Suction pipe (transparent PVC) |
| m 2 | Venting hose (transparent PVC) |
| n.1 | This installation manual |

* If hose is 6x8 there is only a 4meters long hose.
Cut to obtain suction and delivery hoses.

Remove the contents from the box.

PLEASE DO NOT TRASH PACKAGING.
IT CAN BE USED TO RETURN THE PUMP.

**Legend:**

a. **Alternating Current;**

b. **DC,**

c. **Protective Earth;**

d. **Standby;**

e. **Warning -**

# 3. Pump's description

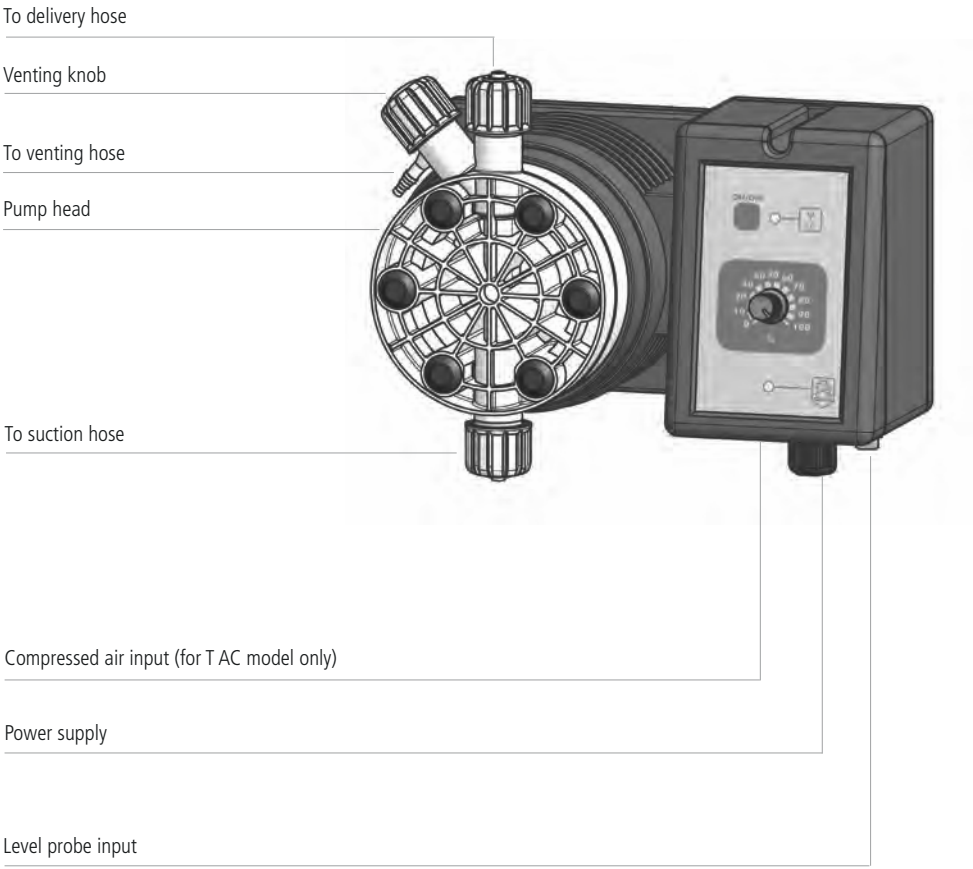


N.B. TA series (self-venting metering pumps) is described on p. 14.

# 4. Before to Install warnings

Pump's installation and operativity is made in 4 main steps:

Pump's installation
Hydraulic Installation (hoses, level probe, injection valve)
Electrical Installation (main power connection, priming)
Programming the pump.

Before to start, please read carefully the following safety information.

Protective clothes

**Wear always protective clothes as masks, gloves, safety glasses, ear plugs or ear muffs, and further security devices during ALL installation procedure and while handling chemicals.**

Installation location

Pump must be installed in a safety place and fixed to the table / wall to avoid vibration problems!

Pump must be installed in a easy accessible place!

Pump must be installed in vertical position!

Avoid water splashes and direct sun!

Hoses and Valves

Suction and delivery hoses must be installed in vertical position!
All hoses connections must be performed using only hands' force!
No tongs required!

**Delivery hose must be firmly fixed to avoid suddenly movements that could damage near objects!**

**Suction hose must be shorter as possible and installed in vertical position to avoid air bubbles suction!**

Use only hoses compatibles with product to dose! See chemical compatibility table. If dosing product is not listed please consult full compatibility table or contact chemical's manufacturer!

**Feeder should be interlocked with a no-flow protection device to automatically shut-off the pumps when there is no flow!**

**Adequate measures shall be taken to prevent cross connection of chemicals!**

**Chemical feeding must be stopped during backwash cycles and periods of noflow as these conditions may introduce the potential for chemical overdosing. Not doing so may result in elevated chemical concentrations and hazerdous gas introduction into the pool or spa.**

# 5. Installation draw

Pump must be installed in a wall support at a maximum height (**from tank's bottom**) of **1,5 meters**.

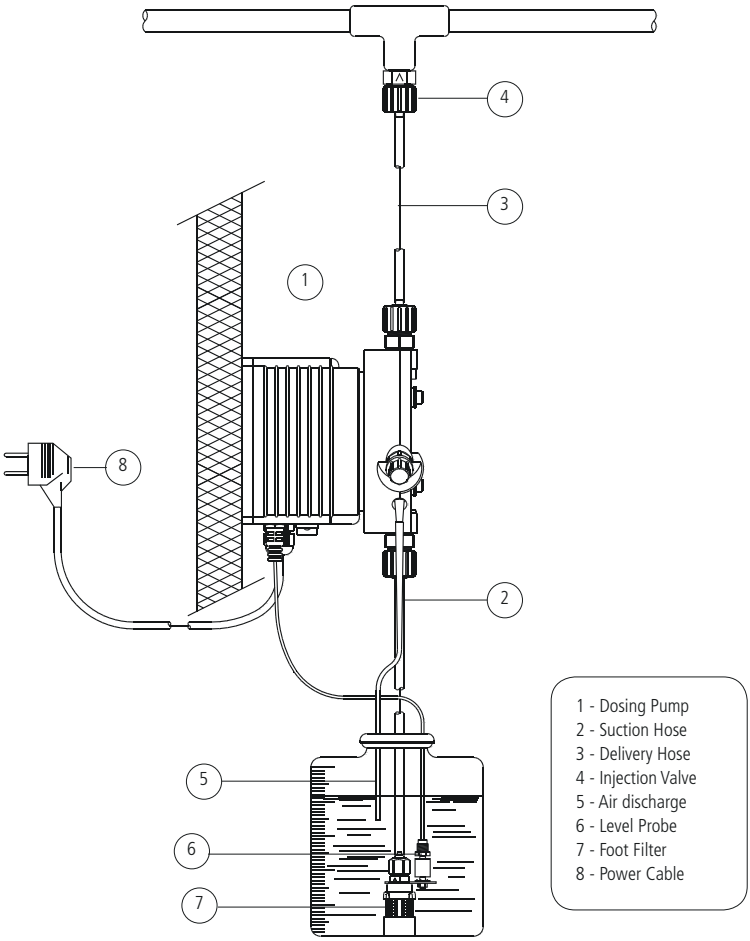

# 6. Hydraulic installation

Hydraulic connections are:

Suction Hose with level probe and foot filter
Delivery Hose with injection valve
Venting hose

## 6.1 Suction Hose.

Completely unscrew tightening nut from pump's head and remove assembling components: tightening nut, holding ring and pipe holder.

Assembly as shown in fig. (A). Insert hose into pipe holder until it reaches the bottom.

Lock hose on pump's head by screwing down the tightening nut.
Use only hands to do it!

Connect other side of the hose to the foot filter using the same procedure.

fig. (A)

## 6.2 Assembling foot filter with level probe.

Level probe must be assembled with foot filter using the provided kit.
Foot valve is made to be installed into tank's bottom without sediments priming problem.

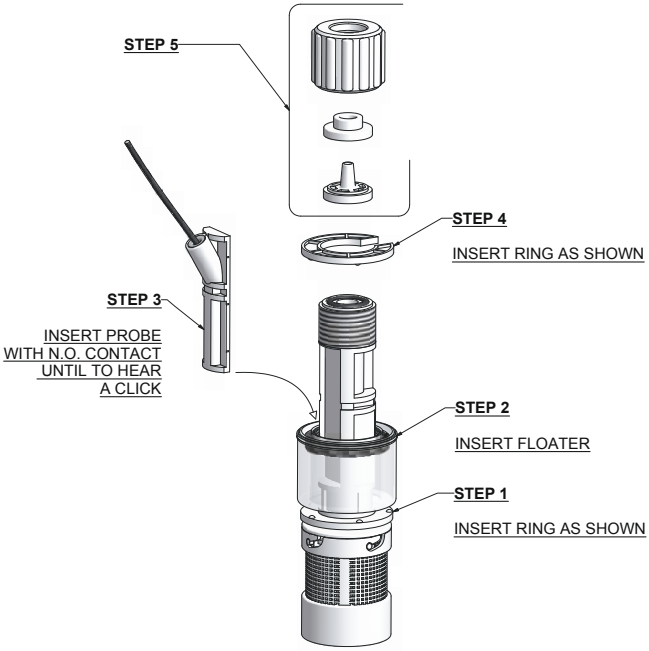


Connect BNC from level probe into pump's level input (front side of the pump).
Put level probe assembled with foot filter into tank's bottom.

**Warning: If there is a mixer installed into tank, install a suction lance instead of level probe / foot filter.**

## 6.3 Delivery Hose.

Completely unscrew tightening nut from pump's head and remove assembling components: tightening nut, holding ring and pipe holder.

Assembly as shown in fig. (A). Insert hose into pipe holder until it reaches the bottom.

Lock hose on pump's head by screwing down the tightening nut.
Use only hands to do it!

Connect other side of the hose to the injection valve using the same procedure.

## 6.4 Injection Valve.

Injection valve must be installed on plant from water's input.
Injection valve will open at pressure greater than 0,3bar.

## 6.5 Manual venting hose.

Insert one side of venting hose into manual venting connector as shown in fig (C).

Insert other side of venting hose into product's tank.
During priming procedure product exceeding will flow into tank.

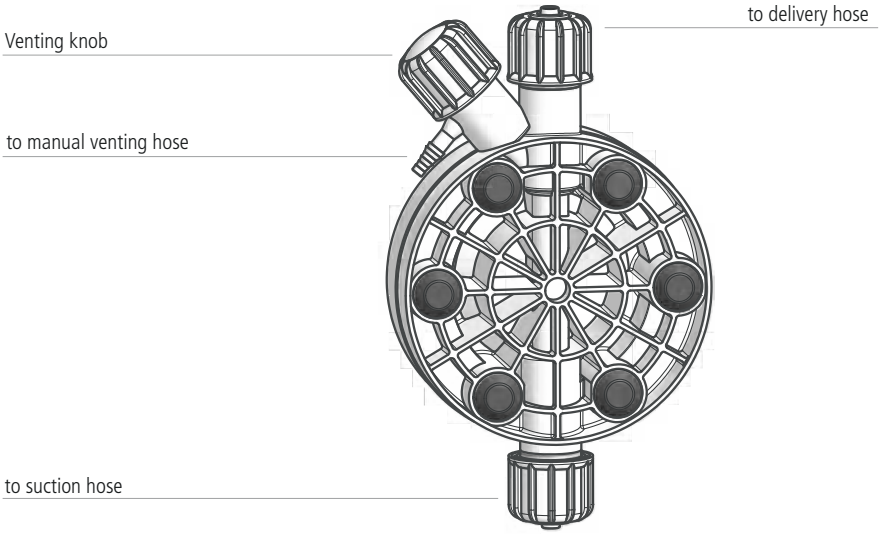


fig (C)

For priming procedure see **PRIMING**.

it's allowed to lightly bend the venting hose.

**During calibration procedure ("TEST") insert venting hose into BECKER test-tube.**

# 7. Self-Venting pump head installation

Self-venting pump head must be used when using chemicals that produce gas (i.e. hydrogen peroxide, ammonium, sodium hypoclorite at particular conditions).
Refer to fig. 3-4 for delivery and Self venting hose.
Hoses assembling procedures are the same described before.

Fig. 3. Self-venting models pump head: LA, MA, NA (TA).

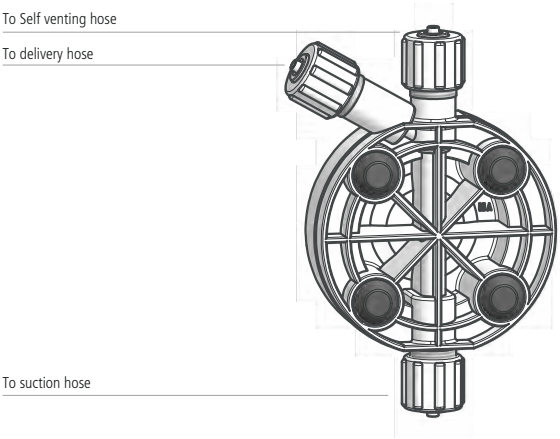


Fig. 4. Self-venting models pump head: SA, TA (TA).

ON "SA" AND "TA" MODELS THERE IS A RED THREADING NUT

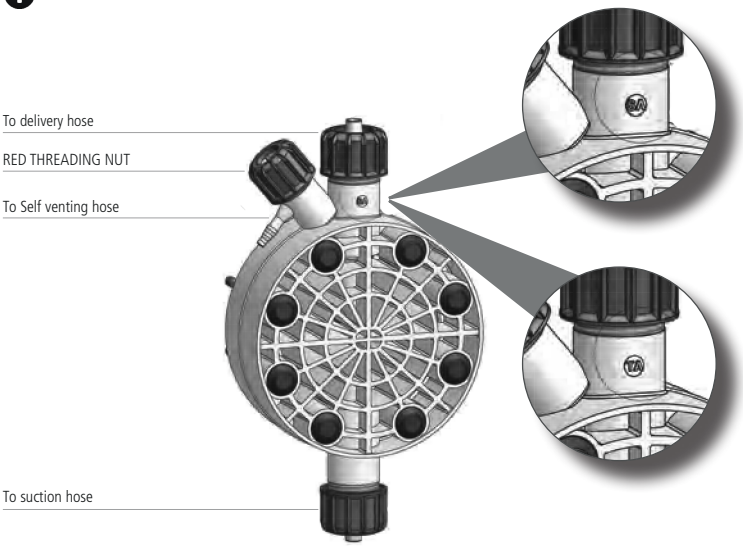

# 8. Electrical Installation

All electrical connections must be performed by **AUTHORIZED AND QUALIFIED** personnel only.
Before to proceed, please, verify the following steps:

- verify that pump's label values are compatible with main power supply.

- pump must be connected to a plant with a differential switch (0,03A sensitivity) if there isn't a good ground.

- to avoid damages to the pump do not install it in parallel with heavy inductance load (for example: engines). A relay switch must be used. See below picture.

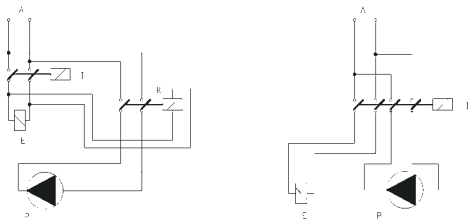


**P** - Dosing Pump
**R** - Relay
**I** - Switch or safety device
**E** - Electrovalve or inductance load
**A** - Main Power

WARNING
IF EQUIPMENT IS SUPPLIED WITH A PLUG:

If an appliance coupler or separable plug is used as the disconnecting device, it shall be readily identifiable and easily reached by the operator. For single-phase portable equipment, a plug on a cord of length not greater than 3m is considered to be easily reached.

WARNING
IF EQUIPMENT IS NOT SUPPLIED WITH A PLUG:

a) a switch or circuit-breaker shall be included in the building installation
b) it shall be in close proximity to the equipment and within easy reach of the operator
c) it shall be marked as the disconnetting device for the equipment

Once verified previous steps proceed as follows:

- check that "BNC" of level probe has been connected as described in "Hydraulic Installation" chapter.

-

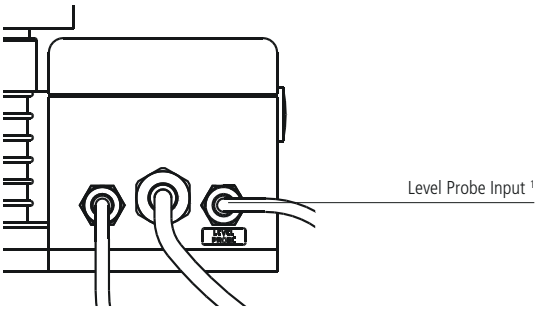

# 8. Level alarm

## LEVEL ALARM

CL, IS, IC, PV, TE and PVM type pump are provided with a liquid level alarm to indicate product tank is empty. The level probe is connected to the right BNC plug on pump's bottom panel. The level probe is made of a N.O. reed contact (10VA, 1A max., 230Vac max.) closed by a floating magnet housed in a (PP) plastic box. When the product level goes below the minimum the magnet closes the reed contact. The pump stops and the red LED on pump's front panel indicates the alarm status.

## PUMP TYPES

Pumps mod. "TCL" (12-24 Vac/Vdc), "TIC", "TIS", "TPV" and "TPVM" are equipped with a bicolour led.
Led on, red colour: low level product alarm. Check product's tank and restore the level.
Led on, blinking green colour: pump normal operating mode.
Led on, blinking green colour (one second on, one second off): power supply out of range. Check pump's label and check the main power.

TCO MODEL

Constant dosing pump with stroke speed adjustment between 0 and 100% of indicated capacity (see label on pump type). The % marked knob sets the pump capacity, changing linearly the magnet stroke number per minute. It is strongly suggested to not operate the pump in the range from 0 to 10%, since there is not a linear correlation with the pump stroke speed in that range. This pump is specially designed for constant dosing rates. TCO pump can be ON/OFF driven by a LPH or a LCD instrument. To set 2.5 l/h against 5 bar on a TCO 0505 the % marked knob should be set to 50%.

TCO has a divider (x- 0,1) to reduce by ten times the pump capacity by dividing the pump stroke speed.
How to enable "divider mode":
- set the pump into OFF* mode;
- keeping pressed the on/off button, wait 3 flashes from the status led. The pump will start the dosing activity with the stroke speed reduced ten times than the value set on stroke lenght knob.
To disable the "divider mode", power OFF the pump. Keeping pressed the on/off button, wait 3 flashes of the status led.

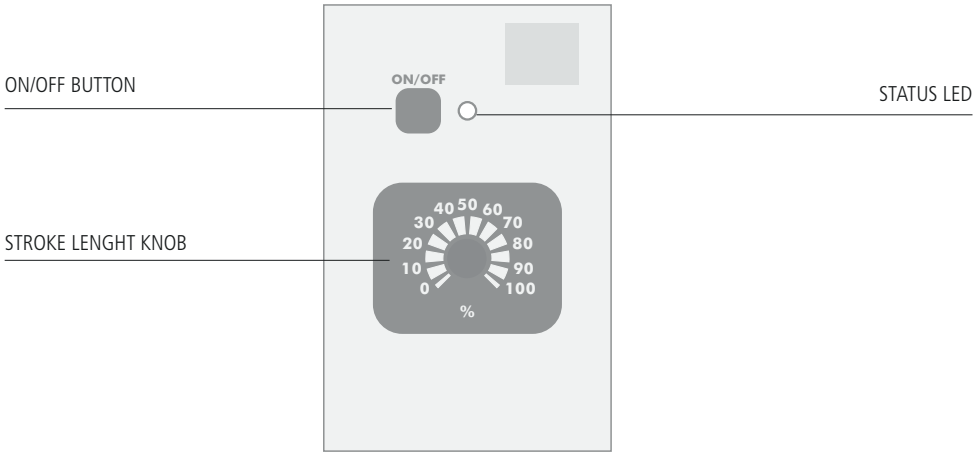


LED
The led on the frontal panel shows the pump's operating status through 5 flashing:

| LED ACTIVITY | PUMP'S STATUS |
|---|---|
| It flashes 3 times per second | the pump is powered with a power supply lower than the label |
| It flashes 2 times per second | the pump is powered with a power supply higher than the label |
| It flashes 1 time every 2 seconds | the pump is in pause (OFF) and it is powered (OFF* mode) |
| led ON, it switches off when pump strokes | the pump is active and functioning (ON) |
| led ON, it switches off 1 time every 2 seconds | the pump is working into DIVIDE mode |

TCL MODEL

Constant dosing pump with level alarm, provided with a floating magnetic sensor probe.
A red led indicates that the pump stopped dosing because the product tank is empty.
This pump has stroke speed adjustment between 0 and 100% of indicated capacity (see label on pump type).
The % marked knob sets the pump capacity, changing linearly the magnet stroke number per minute. It is strongly suggested to not operate the pump in the range from 0 to 10%, since there is not a linear correlation with the pump stroke speed in that range.

TCL has a divider (x- 0,1) to reduce by ten times the pump capacity by dividing the pump stroke speed.
How to enable "divider mode":
- set the pump into OFF* mode;
- keeping pressed the on/off button, wait 3 flashes from the status led. The pump will start the dosing activity with the stroke speed reduced ten times than the value set on stroke lenght knob.
To disable the "divider mode", power OFF the pump. Keeping pressed the on/off button, wait 3 flashes of the status led.

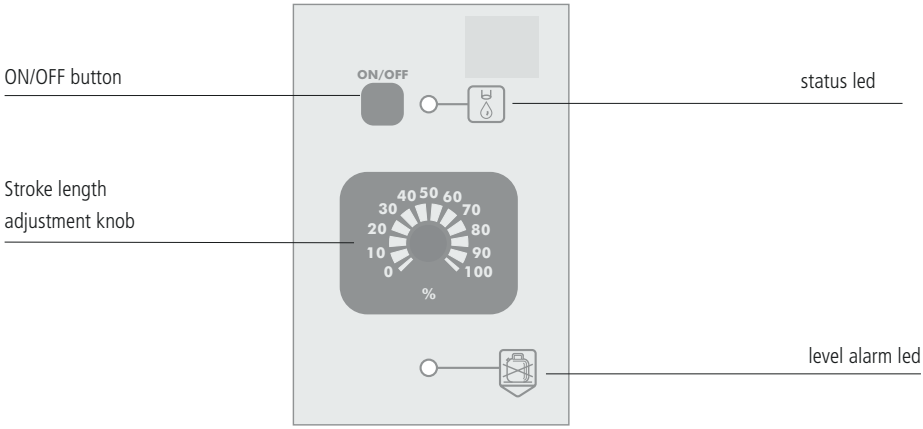


LED
The led on the frontal panel shows the pump's operating status through 5 flashing:

| LED ACTIVITY | PUMP'S STATUS |
|---|---|
| It flashes 3 times per second | the pump is powered with a power supply lower than the label |
| It flashes 2 times per second | the pump is powered with a power supply higher than the label |
| It flashes 1 time every 2 seconds | the pump is in pause (OFF) and it is powered (OFF* mode) |
| led ON, it switches off when pump strokes | the pump is active and functioning (ON) |
| led ON, it switches off 1 time every 2 seconds | the pump is working into DIVIDE mode |

TIC MODEL

Proportional/constant pump driven by current signal.
Setting the switch on the constant position the pump has stroke speed adjustment between 0 and 100% of indicated capacity (see label on pump type). The % marked knob sets the pump capacity, changing linearly the magnet stroke number per minute. It is strongly suggested to not operate the pump in the range from 0 to 10%, since there is not a linear correlation with the pump stroke speed in that range.
Setting the switch on the proportional position the pump capacity is set proportionally to a given analog current signal; a given signal linear change will be followed by a linear change of capacity.
The current signal accepted range is 0-20 mA (it can be changed upon demand). The maximum pump capacity requested by the maximum input signal is set by the % marked knob. The IC pump can be driven by any electronic device (such as pH-meter, redox-meter, etc) that gives an analog current signal output. This signal must be applied to the bipolar cable provided with the pump, already internal connected, taking care of connections:

- red wire : positive (+)
- black wire : negative (-)

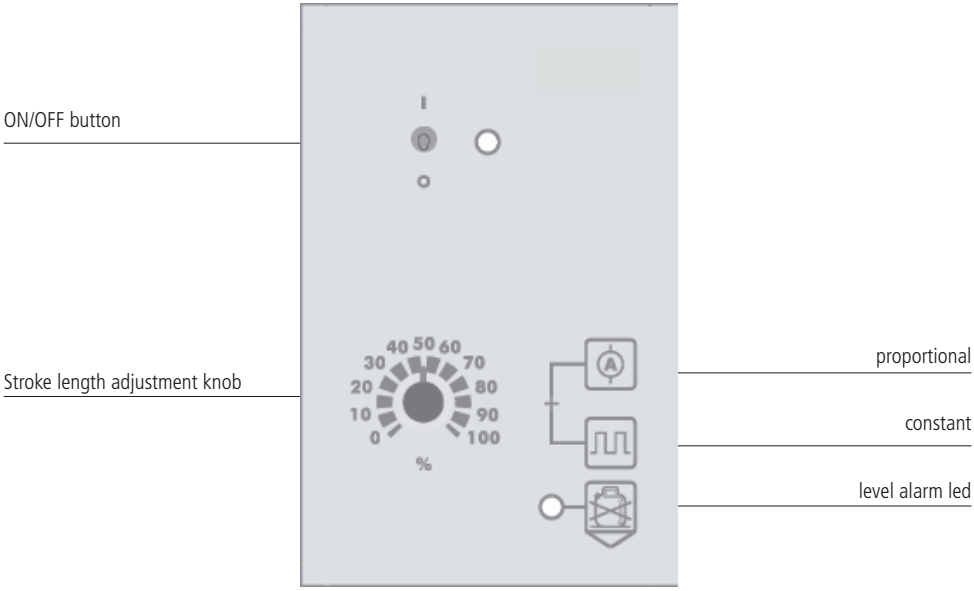

TIS

Proportional/constant pump driven by a digital signal. Setting the switch on the constant position, the pump has the same features and adjustments of the CL pump. Setting the switch on the proportional position, to each external voltage free pulse correspond a magnet stroke. When proportional position is set, the % marked knob does NOT affect the pump capacity. IS proportional dosing pump can be driven by any external device (PCs, PLCs, etc) that produce a digital signal. The digital signal (N.O. contact) must be applied to the cable provided with the pump, already internal connected. If the digital signal is produced by an "Open Collector" transistor take care of connections:

- red wire : positive (+)
- black wire : negative (-)

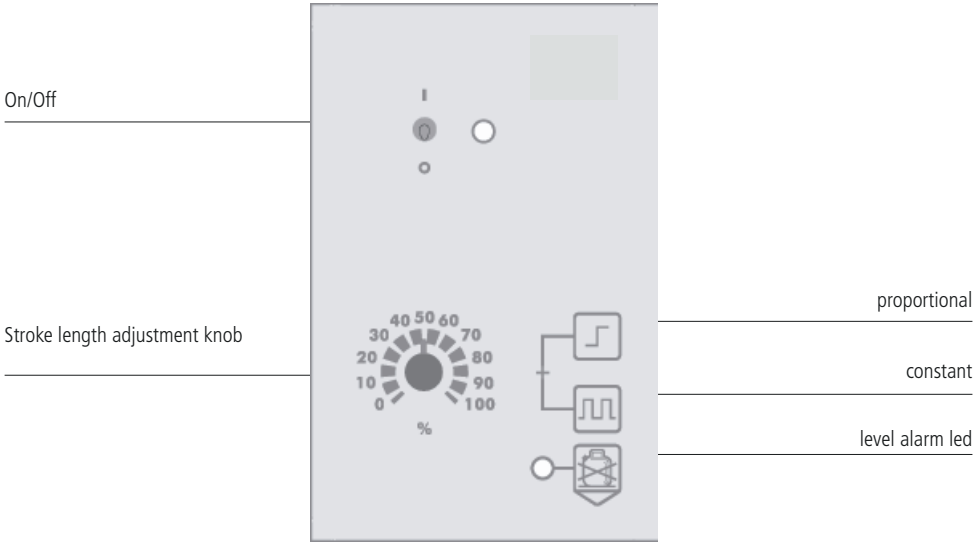

TPV

Proportional/constant pump driven by a water meter digital signal. Setting the switch on the constant position, the pump has the same features and adjustments of the CL pump. It is furthermore possible to divide the maximum magnet strokes per minute by 1, 10 and 100 using the switch on the front panel. Setting the switch on the proportional position, to each external pulse correspond one pump stroke. This pump can be driven by a CTFI or CWFI series water meters. This pump can also be driven by a digital signal coming from a voltage free contact. Driving signal is applied on the BNC plug on the left of the bottom pump cover. Dividing factor (N) value is obtained multiplying the indicated value on the adjustment knob by the multiplying switch (x1, x10, x100) value.

Capacity definition for "TPV" pump

Given the water $m^3$ to be treated and the product amount to dose in p.p.m., the minimum pump capacity to be used can be obtained with the following formula:

$$\frac{ppm \times m^3}{1000 \times K} = l/h$$

l/h - minimum pump capacity required
ppm - product amount to dose in p.p.m. ($gr/m^3$)
k - dosed product dilution factor (pure chemical k=1)
$m^3$ - maximum capacity of the system to be treated in $m^3$ /h.

Dividing factor (N) to be set on the adjustment knob is given by the following formula:

$$\left(\frac{imp/l \times cc}{ppm \times K}\right) \times 1000 = N$$

N - is the number the external pulses are divided by to be set on the adjustment knob
imp/l- pulse per liter given by the water meter
cc - pump's single stroke dosing quantity (in cc). Refer to following table
k - dosed product dilution factor (pure chemical k=1)
ppm* - product amount to dose in p.p.m. ($gr/m^3$)
* 10.000 ppm equals to 1%

If the dividing factor (N), obtained with the above formula, is <1, a pump with higher single stroke dosing quantity is required or the water meter needs to be changed with one that gives higher number of pulses per liter. In some application this issue can be solved reducing the dosed product dilution factor. If dosed amount is higher than the needed one, the set dividing factor (N) can be increased.

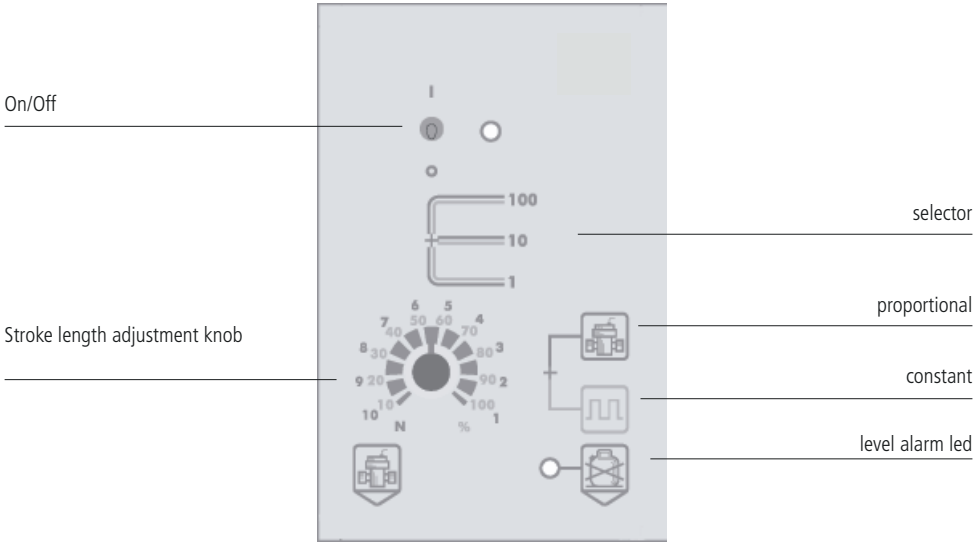

TPVM

Proportional/constant pump driven by a water meter digital signal. Setting the switch on the constant position, the pump has the same features and adjustments of the CL pump. It is furthermore possible to divide the maximum magnet strokes per minute by 1 (-1), 10 (-10) and 100 (-100) using the switch on the front panel. The electronic capacity adjustment sets the injection per minute. Setting the selector on the proportional position and the selector on "multiplier" (X1), the pump gives a stroke each 10 external pulses sent. Setting the selector on "divider" (-1 or -10), the pump gives at maximum a stroke each external pulse sent and at minimum a stroke each 100 pulses sent. This pump can be driven by a CTFI or CWFI series water meters. This pump can also be driven by a digital signal coming from a voltage free contact. Driving signal is applied on the BNC plug on the left of the bottom pump cover.

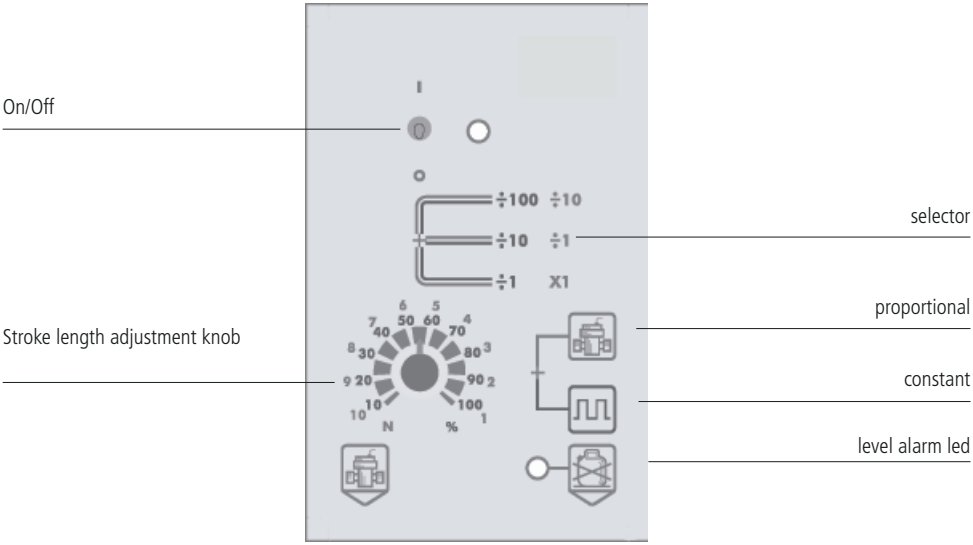

TTE

Timered/constant dosing pump. Setting the switch on the constant position, the pump has the same features and adjustments of the CL pump. Setting the switch on timered , the pump starts working when an external pulse is provided. Working active time for each external pulse is set on the adjustment knob in the range between 0 and 60 seconds (different time are available upon demand). The capacity can be also changed adjusting the stroke per minute, operating the % marked knob, at the same time. The double parameter adjustment (strokes and time) allows the use of this pump in high capacity systems, where the pulses are not enough to drive a PV type pump. TE pump is provided of a coaxial cable (RG58) with BNC plug to connect the command signal.

Use following formula to evaluate the knob adjustment:

$$\frac{3600}{\text{imp/h}} = \text{sec.}$$

imp/h - water meter output pulse per hour
sec - time in seconds to be set on time knob

**Maximum tag capacity can be decreased 10 or 100 times in the "G" pumps using the 1/10/100 switch (where available). In that case the % marked knob will work on the maximum set capacity.**

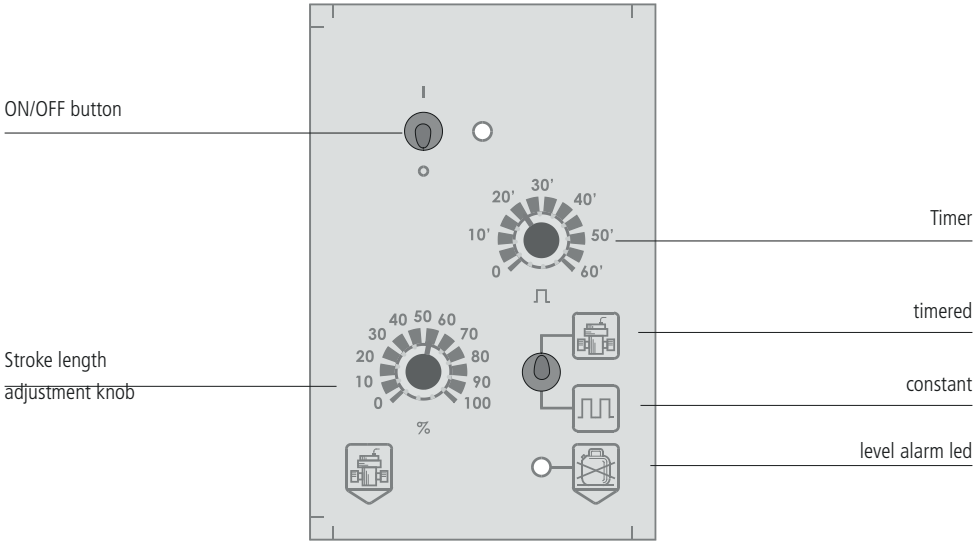

PRIMING

On the pump head there is a Self venting hose (left side).

To prime the pump without touching the chemical proceed as follow:

1. connect the transparent hose to the Self venting hose and insert its end into the chemical tank;

2. open the discharge valve turning the knob;

3. turn on the pump and set the stroke lenght adjustment knob on 100% and the stroke speed (frequency) adjustment knob on 100% (between 50% and 70% for high viscosity chemicals).

4. All air inside the pump will exit through the discharge valve. When the chemical begin to flow into Self venting hose, close immediately the venting knob.

If the chemical is particularly dense, to facilitate the priming:

1. turn on the pump and open the discharge valve;

2. insert a 20cc syringe into the Self venting hose and suck;

3. when the syringe is near to full, close the discharge valve.

# 11. Troubleshooting

| Problem | Possible Cause |
|---|---|
| Pump doesn't turn on. | Pump isn't powered. Connect it to main supply.<br><br>Pump's protection fuse is broken. Replace it. See page 25 for replacement procedure.<br><br>Pump's main board is broken. Replace it. See page 25 for replacement procedure. |
| Pump is not dosing and solenoid is operating. | The foot filter is obstructed. Clean it.<br><br>Suction hose is empty. Pump must be primed. Repeat priming procedure.<br><br>Air bubbles inside hydraulic circuit. Check valves - hoses - fittings.<br><br>Product to dose is generating gas. Turn venting knob and let air flow away.<br><br>Use a self-venting pump head. |
| Pump is not dosing and solenoid isn't operating or slightly operating. | Crystals presence inside valves. Check them and try to dose 2-3 liters of normal water.<br>Change valves.<br><br>Injection valve obstructed. Change it. |

## 12. Fuse and main board replacement

Fuse or main board replacement is allowed to qualified personnel only. Before to operate disconnect the pump from main power and all hydraulic connections.

For fuse replacement is necessary to use a 3x16 and 3x15 screwdriver and a new fuse (same model of old one).

For main board replacement is necessary to use a 3x16 and 3x15 screwdriver and a new main board (same model of old one).

Fuse replacement procedure:

- Remove 8 screws from pump's back.
- Pull pump's back cover until it's completed separated from pump's front.
- Locate the blown fuse and replace it.
- Reassemble the pump.
- Reinsert screws.

Main board replacement procedure:

- Remove 8 screws from pump's back.
- Pull pump's back cover until it's completed separated from pump's front.
- Remove board's screws.
- Completely disconnect wires from main board and replace it. Reinsert screws.
- Reconnect wires to the main board (see enclosed picture).
- Reassemble the pump.
- Reinsert screws.

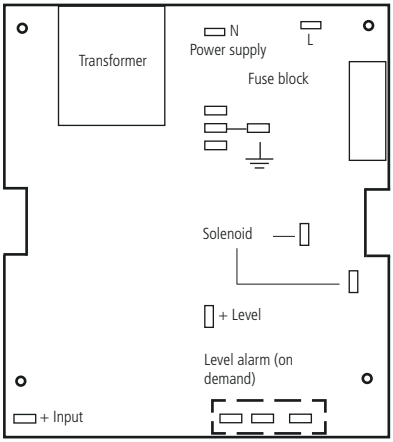


Model TPV / TTE

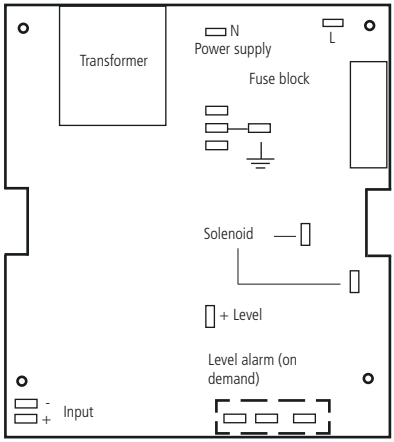


Model TIC / TIS

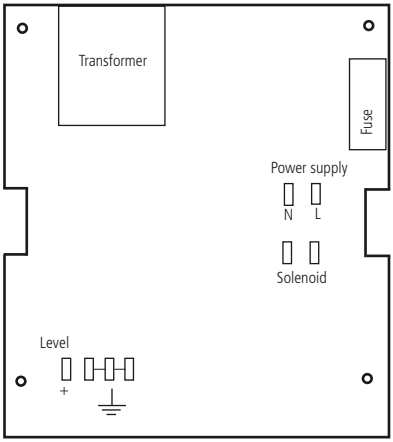


Model TCL

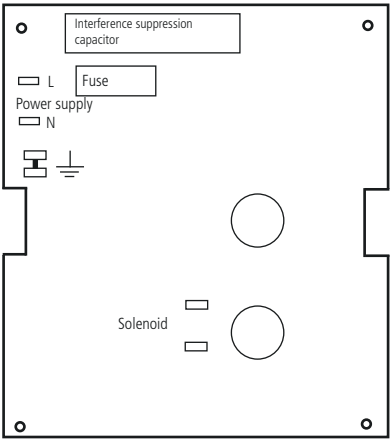


Model TCO

Maintenance schedule

**In order to ensure the requirements of potable drinking water treated and the maintenance of the improvements as declared by the manufacturer, this equipment must be checked at least once a month.**

**OPERATOR PROTECTION**
**Use safety equipment according to the company regulations.**
**Use this safety equipment within the work area during installation, service and when handling chemicals:**
- **protective mask**
- **protective gloves**
- **safety goggles**
- **ear plugs or hear muffs**
- **further security device, if necessary.**

**POWER SUPPLY DISCONNECTION**
**Always disconnect power to the motor before you perform any installation or maintenance tasks. Failure to disconnect power will result in serious physical injury.**

**Installation and maintenance tasks should be carried out by AUTHORIZED AND QUALIFIED PERSONNEL only in accordance with local regulations.**

Use original spare parts.

---

Maintenance inspection

**Shutdown the dosing pump before any maintenance operation** **Shutdown procedure.**

A maintenance schedule includes these types of inspections:
- Routine maintenance and inspections
- Three-month inspections
- Annual inspections

Shorten the inspection intervals appropriately if the pumped chemical is abrasive or corrosive.

**Routine maitenance and inspections**
Perform these tasks whenever you perform routine maintenance:
- Inspect the seal. Ensure that there are no leaks from the mechanical seal.
- Check electrical wiring
- Check for unusual noise and vibration (noise allowed 73 dbA; ± 5 dB).
- Check the pump and piping for leaks.
- Check for corrosion on parts of the pump and / or on hoses.

**Three-month inspections**
Perform these tasks every three months:
- Check that the tightenings.
- Check the mechanical seal if the pump has been left idle.

**Annual inspections**
Perform these inspections one time each year:
- Check the pump capacity (as per nameplate).
- Check the pump pressure (as per nameplate).
- Check the pump power (as per nameplate).

f the pump performance does not satisfy your process requirements, and the process requirements have not changed, then perform these steps:
1. Disassemble the pump.
2. Inspect it.
3. Replace worn parts.

Shutdown procedure

**This procedure SHOULD BE CARRIED OUT BY AUTHORIZED AND QUALIFIED PERSONNEL**

**OPERATOR PROTECTION**
**Use safety equipment according to the company regulations.**
**Use this safety equipment within the work area during installation, service and when handling chemicals:**
- **protective mask**
- **protective gloves**
- **safety goggles**
- **ear plugs or hear muffs**
- **further security device, if necessary.**

Shutdown the dosing pump **before any maintenance operation** or **before long downtimes**. Disconnect power and ensure it cannot be restarted.

**Depressurize the system. The liquid may leak splashing.**

Drain the chemical from pump head.
Release the pressure and disconnect the disharge pipe from the discharge valve.
Rinse the pump head and clean all valves.

## TECHNICAL FEATURES

| POWER SUPPLY | FREQ. | FUSE |
|---|---|---|
| 230 VAC (180-270 VAC) | 50/60 Hz | 630 mA |
| 115 VAC (90-135 VAC) | 50/60 Hz | 1 A |
| 24 VAC (20-32 VAC) | 50/60 Hz | 6,3 A |
| 12 VDC (10-16 VDC) | | 6,3 A |

| | |
|---|---|
| Pump Strokes: | 0 - 120 |
| Suction Height: | 1,5 metres (5ft) |
| Environment Temperature: | 0 - 45°C (32 - 113°F) |
| Chemical Temperature: | 0 - 50°C (32 - 122°F) |
| Packaging and Transporting Temperature: | -10 - +50°C (14 - 122°F) |
| Max operating altitude: | 2000m |
| Installation Class: | II |
| Audible Noise | T / TA: 62.0 db(A); T / TA silenced: 59.0 db(A); T / TA ultrasilenced: 58.0 db(A); T AC: 78,3db(A) |
| Protection Degree Rating | T / TA: IP65 - UR working % : 85% with t ≤ 40 °C; 70% at 50 °C (without condensing). T AC: IP54 |

**Only compressed air T AC models (T AC CO and T AC CL):**

| | |
|---|---|
| Compressed air consumption | 30 l/h (suction air) |
| Suction air pressure | 7 bar |

Compressed air metering pumps work only with compressed air without lubrificant and/or condensed water.
Air supply pressure range must be from 6 to 10 bar.

## MANUFACTURING MATERIALS

| | |
|---|---|
| Case: | PP |
| Pump head: | PVDF (standard), PP, PMMA, SS * |
| Diaphragm: | PTFE |
| Balls: | CERAMIC, GLASS, PTFE, SS * |
| Suction Pipe | PVC/PE ** |
| Delivery Pipe: | PVDF |
| O-ring: | FP, EP, WAX, SI, PTFE * |
| Level Probe: | PVDF |
| Level probe cable: | PE |
| Foot Filter: | PVDF |

*as ordered.
** according with pump's model.

# T AND TA MODELS

| INFORMATION | | | | | | | | | | | | |
|---|---|---|---|---|---|---|---|---|---|---|---|---|
| **T** | **FLOW** | | | | **cc per stroke** | **Max pressure** | | **Ampere peak (A)** | | PVDF delivery hose | Suction hose | Pump head |
| | min cc/h | max l/h | Min GPH | Max GPH | **Max** | **bar** | **PSI** | 230 VAC | 115 VAC | | | |
| **2005** | 500 | 5 | 0,13 | 1,32 | 0,7 | 20 | 290 | 1,6 | 3,2 | 4 x 6 | 4 x 6 | L |
| **0515** | 1500 | 15 | 0,39 | 3,96 | 2,1 | 5 | 73 | 1,6 | 3,2 | 6 x 8 | 6 x 8 | N |
| **0420** | 2000 | 20 | 0,52 | 5,28 | 2,8 | 4 | 58 | 1,6 | 3,2 | 6 x 8 | 6 x 8 | N |
| **0330** | 3000 | 30 | 0,79 | 7,93 | 4,2 | 3 | 43 | 1,6 | 3,2 | 8 x 10 | 8 x 12 | S |
| **0150** | 5000 | 50 | 1,32 | 13,2 | 7 | 1 | 15 | 1,6 | 3,2 | 8 x 10 | 8 x 12 | S |
| **00100** | 10000 | 100 | 2,64 | 26,4 | 14 | 0 | 0 | 1,6 | 3,2 | 12 x 18 PVC renforced | 12 x 18 PVC renforced | T |
| **TA** | **FLOW** | | | | **cc per stroke** | **Max pressure** | | **Ampere peak (A)** | | PVDF delivery hose | Suction hose | Pump head |
| | min cc/h | max l/h | Min GPH | Max GPH | **Max** | **bar** | **PSI** | 230 VAC | 115 VAC | | | |
| **203,2** | 96 | 3,2 | 0,025 | 0,85 | 0,44 | 20 | 290 | 1,6 | 3,2 | 4 x 6 | 4 x 6 | LA |
| **0510** | 300 | 10 | 0,079 | 2,64 | 1,39 | 5 | 73 | 1,6 | 3,2 | 6 x 8 | 6 x 8 | NA |
| **0413** | 390 | 13 | 0,103 | 3,43 | 1,80 | 4 | 58 | 1,6 | 3,2 | 6 x 8 | 6 x 8 | NA |
| **0320** | 600 | 20 | 0,16 | 5,3 | 2,78 | 3 | 43,5 | 1,6 | 3,2 | 8 x 10 | 8 x 12 | SA |
| **0135** | 1050 | 35 | 0,28 | 9,2 | 4,86 | 1 | 14,5 | 1,6 | 3,2 | 8 x 10 | 8 x 12 | SA |

# T AC MODELS

| **INFORMATION T AC CO AND T AC CL** | | | | | | | | | | |
|---|---|---|---|---|---|---|---|---|---|---|
| **Models** | **FLOW** | | | | **cc per STROKE** | **Maximum injection pressure** | | **Pump Head** | **PVDF Delivery hose** | **Suction Hose** |
| | min cc/h | max l/h | Min GPH | Max GPH | **max** | **bar** | **PSI** | | | |
| 1050 | 1500 | 50 | 0.396 | 13.2 | 7 | 10 | 145 | N | 8 x 12 | 8 x 12 |
| 05150 | 4500 | 150 | 1.19 | 39.6 | 20,8 | 5 | 73 | T | 12 x 18 renforced PVC | 12 x 18 renforced PVC |
| 00230 | 6900 | 230 | 1.80 | 60.7 | 32 | 0 | 0 | T | 12 x 18 renforced PVC | 12 x 18 renforced PVC |

Flow rate indicated is for $H_2O$ at 20°C at the rated pressure.
Dosing accuracy ± 2% at constant pressure ± 0,5 bar.

2005: l/h 05 bar 20
Pump head mod. L

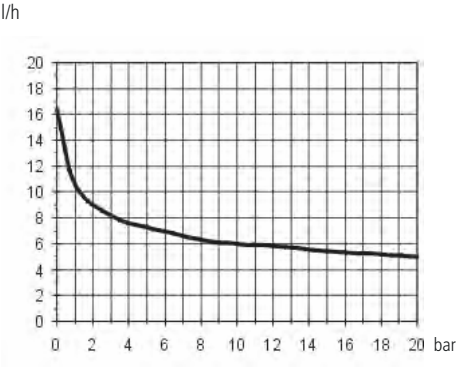


0515: l/h 15 bar 5
Pump head mod. N

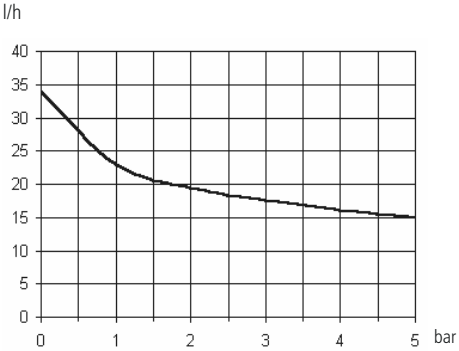


0420: l/h 20 bar 4
Pump head mod. N

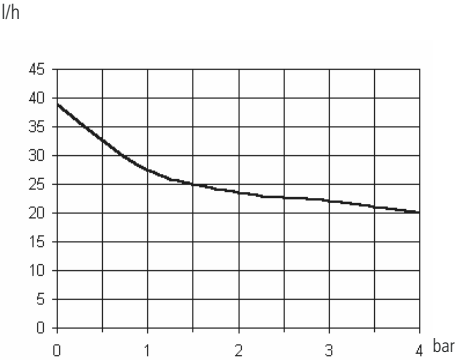


0330: l/h 30 bar 3
Pump head mod. S

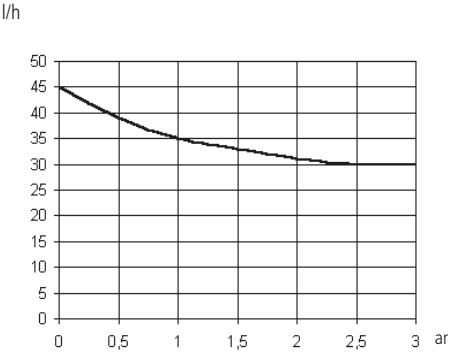


0150: l/h 50 bar 1
Pump head mod. S

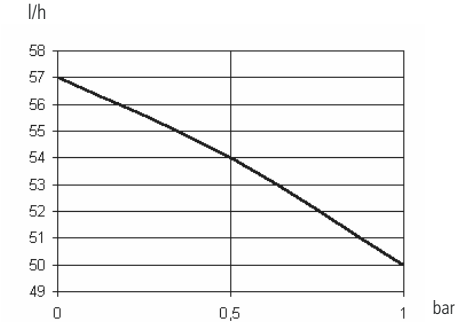


00100: l/h 100 bar 0
Pump head mod. T

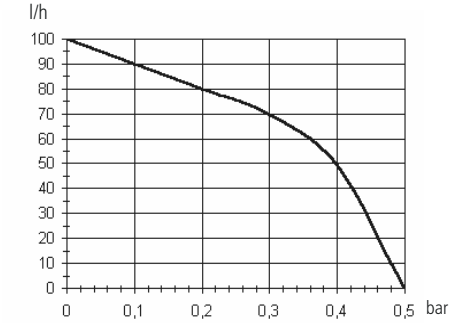

203,2: l/h 20 bar 3,2
Pump head mod. LA

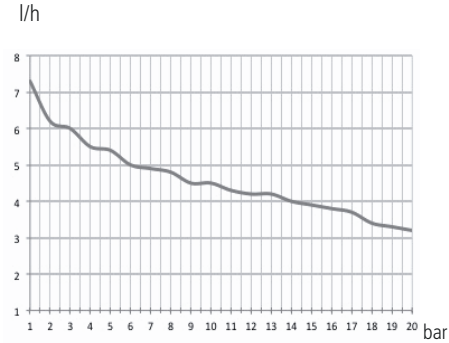


0510: l/h 10 bar 5
Pump head mod. NA

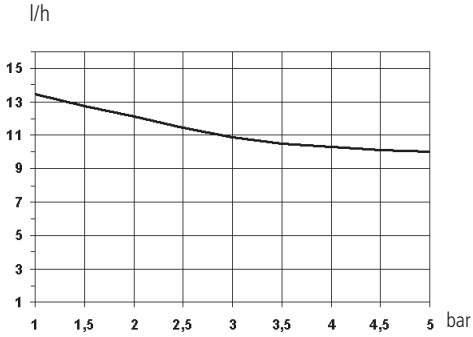


0413: l/h 13 bar 4
Pump head mod. NA

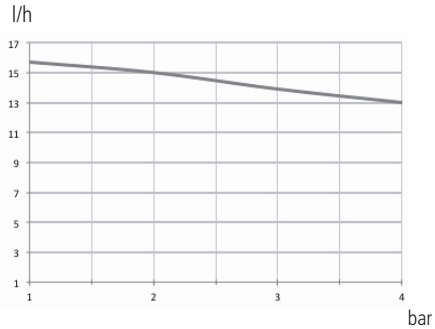


0320: l/h 20 bar 3
Pump head mod. SA

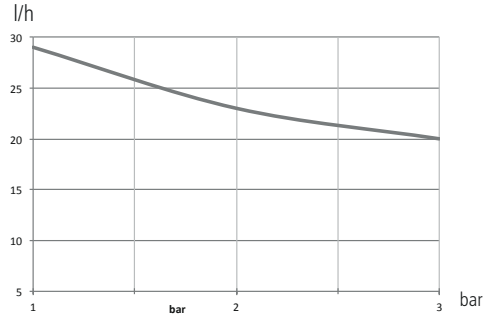


0135: l/h 35 bar 1
Pump head mod. TA

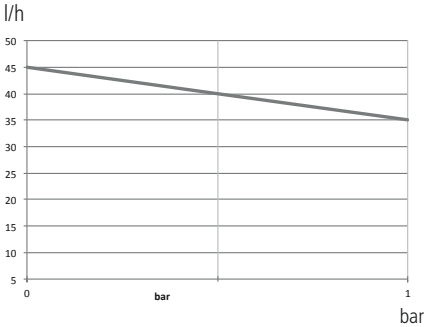


Flow rate indicated is for $H_2O$ at 20°C at the rated pressure.
Dosing accuracy ± 2% at constant pressure ± 0,5 bar.

05150: l/h 150 bar 5
Pump head mod. T

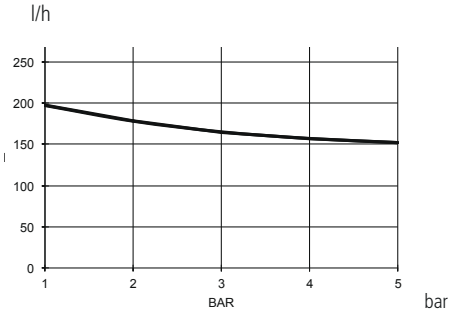


00230: l/h 230 bar 0
Pump head mod. T

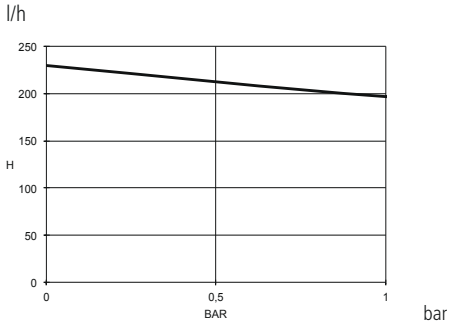


1050: l/h 50 bar 10
Pump head mod. N

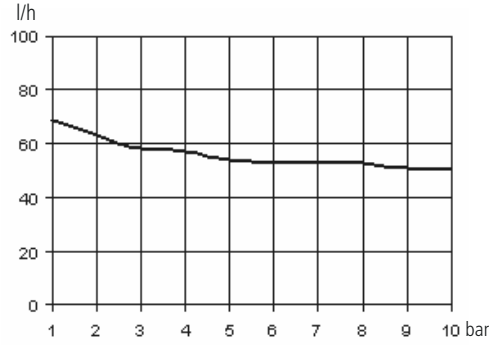

Unit value: mm

## PUMP HEAD "S" - "T"

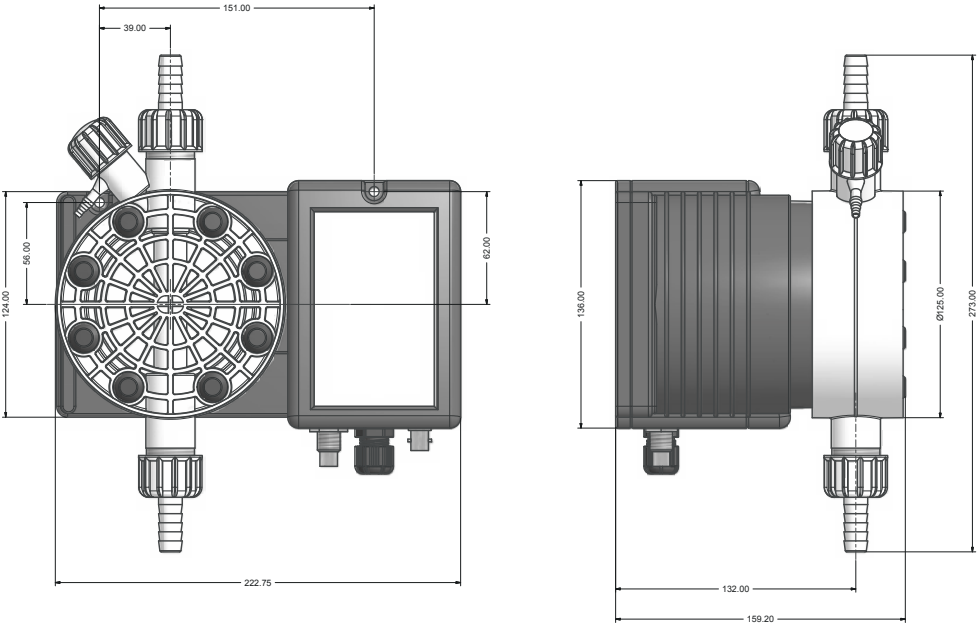


## PUMP HEAD "N" - "P"

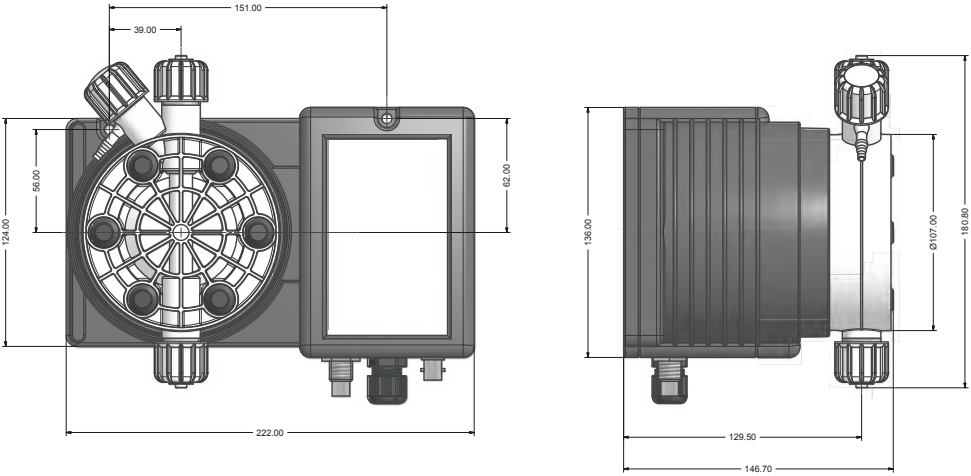

# E Appendix. Chemical Compatibility Table

Chemical compatibility table

Solenoid driven metering pumps are widely used to dose chemical fluids and it is important that the most suitable material in contact with fluid is selected for each application. This compatibility table serves as a useful help in this respect. All the informations in this list are verified periodically and believed to be correct on the date of issuance. All the informations in this list are based on manufacturer's data and its own experience but since the resistance of any material depends by several factors this list is supplied only as an initial guide, in no way manufacturer makes warranties of any matter respect to the informations provided in this list.

Tab. 1. Chemical compatibility table.

| Product | Formula | Ceram. | PVDF | PP | PVC | SS 316 | PMMA | Hastel. | PTFE | FPM | EPDM | NBR | PE |
|---|---|---|---|---|---|---|---|---|---|---|---|---|---|
| Acetic Acid, Max 75% | CH3COOH | 2 | 1 | 1 | 1 | 1 | 3 | 1 | 1 | 3 | 1 | 3 | 1 |
| Hydrochloric Acid, Concentrate | HCl | 1 | 1 | 1 | 1 | 3 | 1 | 1 | 1 | 1 | 3 | 3 | 1 |
| Hydrofluoric Acid 40% | H2F2 | 3 | 1 | 3 | 2 | 3 | 3 | 2 | 1 | 1 | 3 | 3 | 1 |
| Phosphoric Acid, 50% | H3PO4 | 1 | 1 | 1 | 1 | 2 | 1 | 1 | 1 | 1 | 1 | 3 | 1 |
| Nitric Acid, 65% | HNO3 | 1 | 1 | 2 | 3 | 2 | 3 | 1 | 1 | 1 | 3 | 3 | 2 |
| Sulphuric Acid, 85% | H2SO4 | 1 | 1 | 1 | 1 | 2 | 3 | 1 | 1 | 1 | 3 | 3 | 1 |
| Sulphuric Acid, 98.5% | H2SO4 | 1 | 1 | 3 | 3 | 3 | 3 | 1 | 1 | 1 | 3 | 3 | 3 |
| Amines | R-NH2 | 1 | 2 | 1 | 3 | 1 | - | 1 | 1 | 3 | 3 | 1 | 1 |
| Sodium Bisulphite | NaHSO3 | 1 | 1 | 1 | 1 | 2 | 1 | 1 | 1 | 1 | 1 | 1 | 1 |
| Sodium Carbonate (Soda) | Na2CO3 | 2 | 1 | 1 | 1 | 1 | 1 | 1 | 1 | 2 | 1 | 1 | 1 |
| Ferric Chloride | FeCl3 | 1 | 1 | 1 | 1 | 3 | 1 | 1 | 1 | 1 | 1 | 1 | 1 |
| Calcium Hydroxide (Slaked Lime) | Ca(OH)2 | 1 | 1 | 1 | 1 | 1 | 1 | 1 | 1 | 1 | 1 | 1 | 1 |
| Sodium Hydroxide (Caustic Soda) | NaOH | 2 | 3 | 1 | 1 | 1 | 1 | 1 | 1 | 2 | 1 | 2 | 1 |
| [1] Calcium Hypochlor.(Chlor. ted Lime) | Ca(OCl)2 | 1 | 1 | 1 | 1 | 3 | 1 | 1 | 1 | 1 | 1 | 3 | 1 |
| Sodium Hypochlorite, 12.5% | NaOCl + NaCl | 1 | 1 | 2 | 1 | 3 | 1 | 1 | 1 | 1 | 1 | 2 | 3 |
| Potassium Permanganate, 10% | KMnO4 | 1 | 1 | 1 | 1 | 1 | 1 | 1 | 1 | 1 | 1 | 3 | 1 |
| Hydrogen Peroxide, 30% (Perydrol) | H2O2 | 1 | 1 | 1 | 1 | 1 | 3 | 1 | 1 | 1 | 3 | 3 | 1 |
| Aluminium Sulphate | Al2(SO4)3 | 1 | 1 | 1 | 1 | 1 | 1 | 1 | 1 | 1 | 1 | 1 | 1 |
| Copper-II-Sulphate (Roman Vitriol) | CuSO4 | 1 | 1 | 1 | 1 | 1 | 1 | 1 | 1 | 1 | 1 | 1 | 1 |

[1] Calcium Hypochlor.(Chlor.ted Lime): WQA test was based on 1% Calcium Hypochlorite solution.

1 - Good resistance rating
2 - Fairly resistance rating
3- Not resistant

Materials

Polyvinyldene fluoride (PVDF) .....Pump heads, Valves, Fittings
Polypropylene (PP).....Pump heads, Valves, Fittings
PVC .....Pump heads
Stainless steel (SS 316).....Pump heads, Valves
Polymethyl Metacrilate Acrylic (PMMA) ...Pump heads
Polytetrafluoroethylene (PTFE) .....Diaphragm
Fluorocarbon (FPM).....O-ring
Ethylene propylene (EPDM).....O-ring
Nitrile (NBR).....O-ring

# F Appendix. Hoses resistance table

Hose features are very important for a reliable dosage. Every pump's model is made to work in the best way using selected hoses according to pump's capacity / model. Information reported here are intended for standard use only. For extended information ask to hose's manufacturer.

| Suction / Delivery Hose | | | |
|---|---|---|---|
| 4x6 mm PVC (transparent) | 4x8 mm PE (opaque) | 6x8 mm PE (opaque) | 8x12 mm PVC (transparent) |

| Delivery Hose | Working Pressure | | | | Breaking Pressure | | | |
|---|---|---|---|---|---|---|---|---|
| 4x6 mm PE 230 (opaque) | 20°C 12 bar | 30°C 10.5 bar | 40°C 8.5 bar | 50°C 6.2 bar | 20°C 36 bar | 30°C 31.5 bar | 40°C 25.5 bar | 50°C 18.5 bar |
| 4x8 mm PE 230 (opaque) | 20°C 19 bar | 30°C 15.7 bar | 40°C 12 bar | 50°C 7.5 bar | 20°C 57 bar | 30°C 47 bar | 40°C 36 bar | 50°C 22.5 bar |
| 6x8 mm PE 230 (opaque) | 20°C 8.6 bar | 30°C 6.8 bar | 40°C 4.8 bar | 50°C 2.3 bar | 20°C 26 bar | 30°C 20.5 bar | 40°C 14.5 bar | 50°C 7 bar |
| 8x12 mm PE 230 (opaque) | 20°C 12 bar | 30°C 10.5 bar | 40°C 8.5 bar | 50°C 6.2 bar | 20°C 36 bar | 30°C 31.5 bar | 40°C 25.5 bar | 50°C 18.5 bar |

| | | | | | | | |
|---|---|---|---|---|---|---|---|
| 4x6 mm PVDF Flex 2800 (opaque) | 20°C 40 bar | 30°C 34 bar | 40°C 30 bar | 50°C 27 bar | 60°C 24.8 bar | 80°C 20 bar | 90°C 10 bar |
| 6x8 mm PVDF Flex 2800 (opaque) | 20°C 29 bar | 30°C 25.5 bar | 40°C 22 bar | 50°C 20 bar | 60°C 18 bar | 80°C 14.5 bar | 90°C 7.3 bar |
| 8X10 mm PVDF Flex 2800 (opaque) | 20°C 18 bar | 30°C 15.5 bar | 40°C 13.5 bar | 50°C 12.5 bar | 60°C 11.2 bar | 80°C 9 bar | 90°C 4.5 bar |

| | |
|---|---|
| ¼ PE 230 (opaque) | 20°C 17.6 bar |
| ⅜ PE 230 (opaque) | 20°C 10.6 bar |
| ½ PE 230 (opaque) | 20°C 10.6 bar |

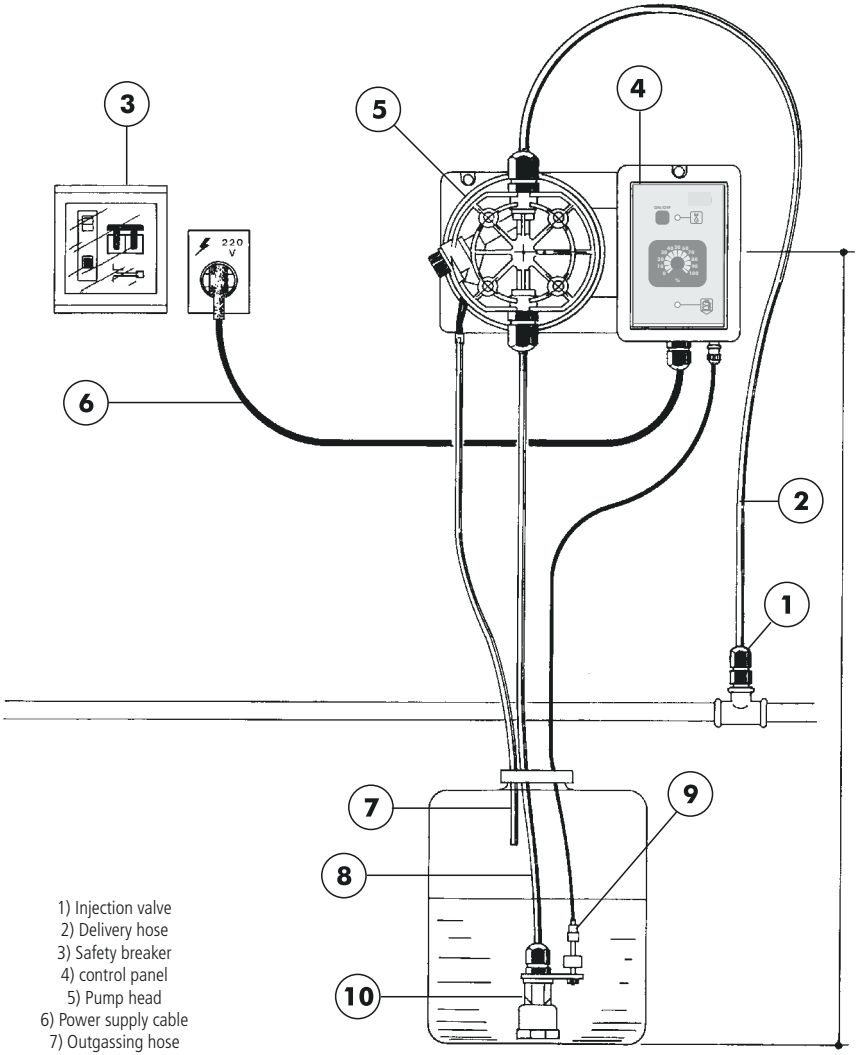


1) Injection valve
2) Delivery hose
3) Safety breaker
4) control panel
5) Pump head
6) Power supply cable
7) Outgassing hose
8) Suction hose
9) Level probe
10) Foot filter

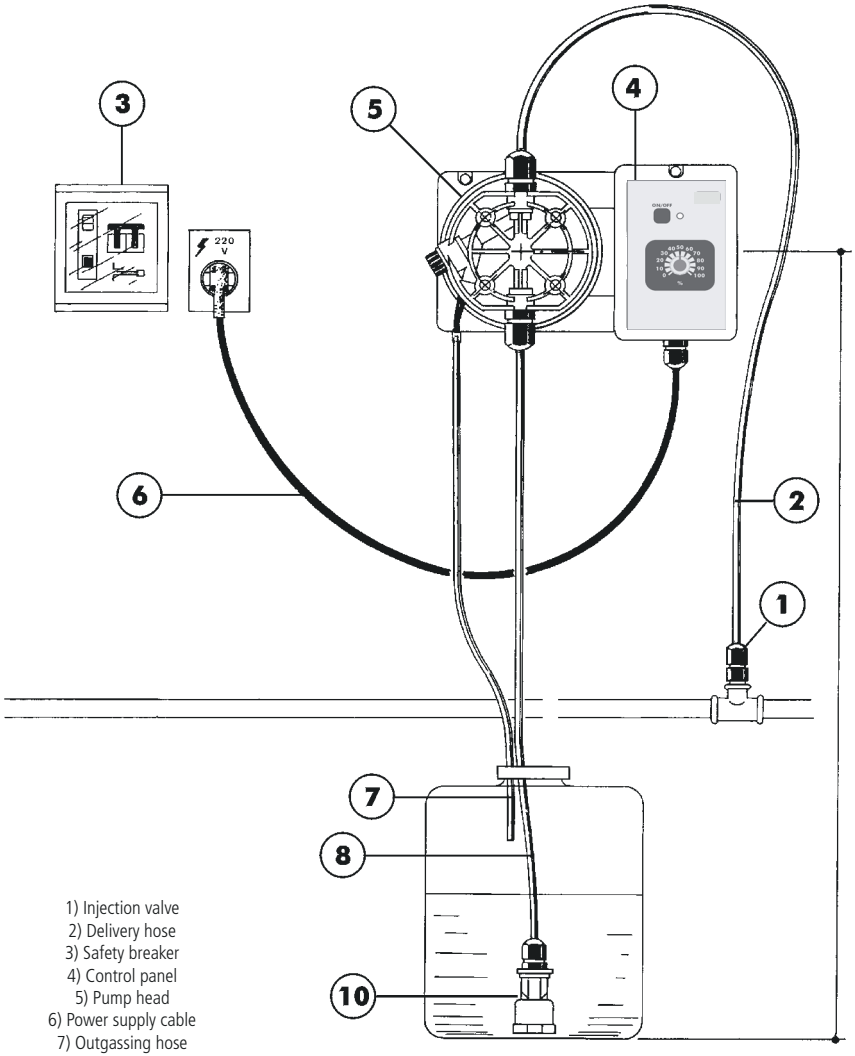


1) Injection valve
2) Delivery hose
3) Safety breaker
4) Control panel
5) Pump head
6) Power supply cable
7) Outgassing hose
8) Suction hose
10) Foot filter

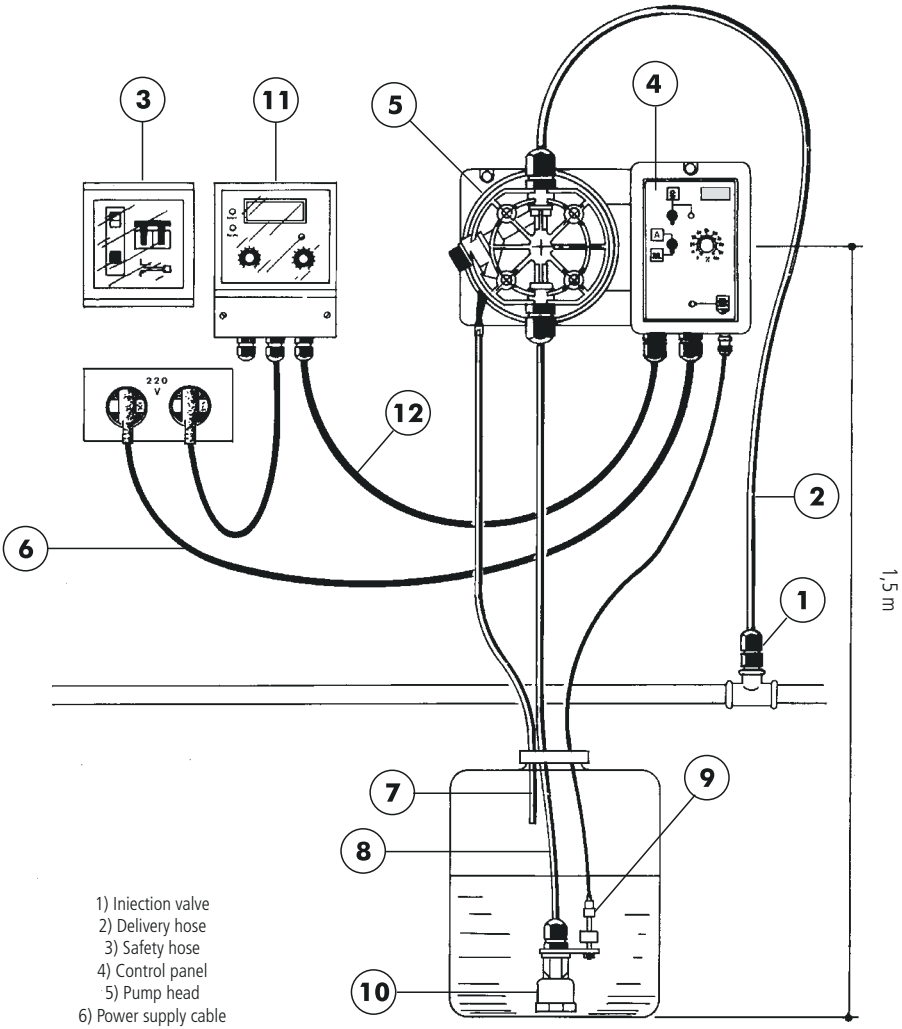


1) Iniection valve
2) Delivery hose
3) Safety hose
4) Control panel
5) Pump head
6) Power supply cable
7) Outgassing hose
8) Suction hose
9) Level probe
10) Foot filter
11) pH-meter
12) Input signal (0-20mA)

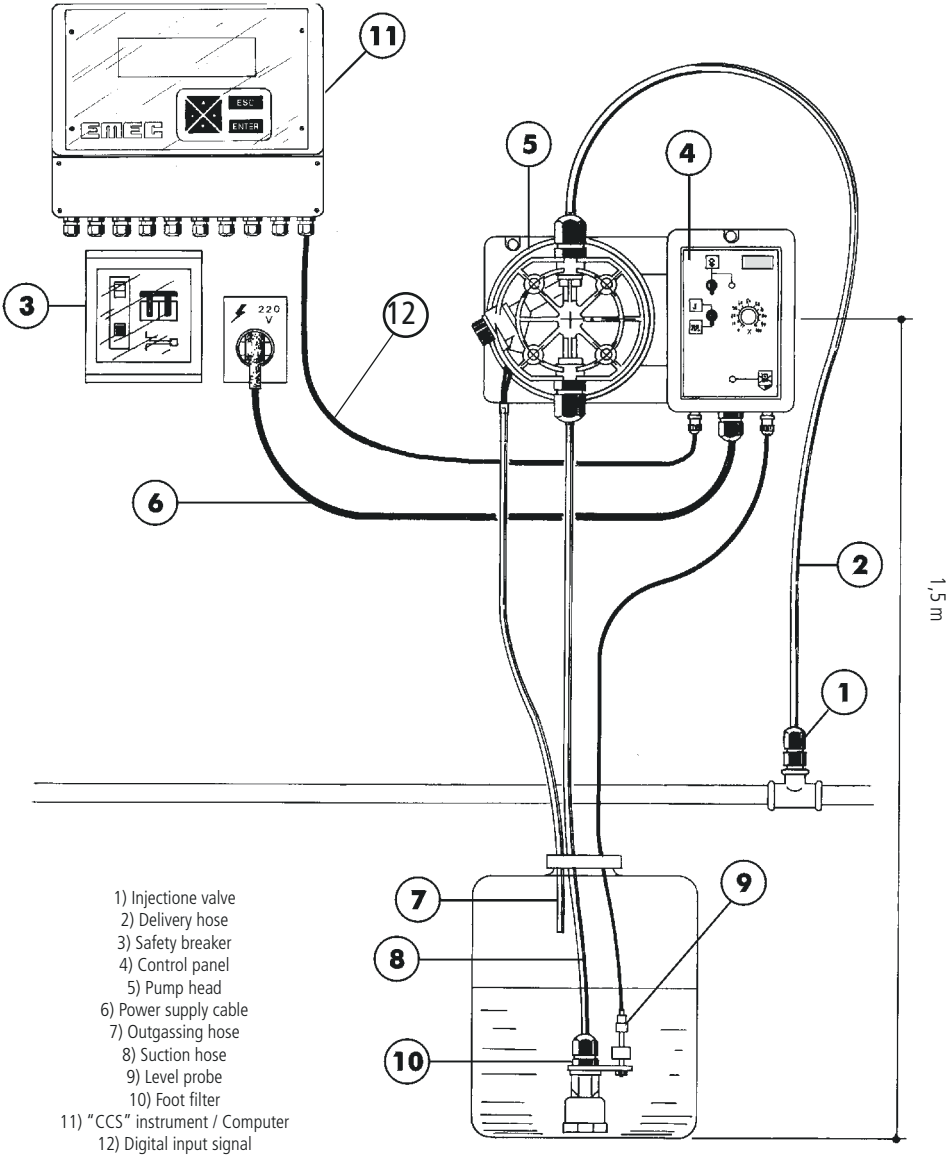


1) Injectione valve
2) Delivery hose
3) Safety breaker
4) Control panel
5) Pump head
6) Power supply cable
7) Outgassing hose
8) Suction hose
9) Level probe
10) Foot filter
11) "CCS" instrument / Computer
12) Digital input signal

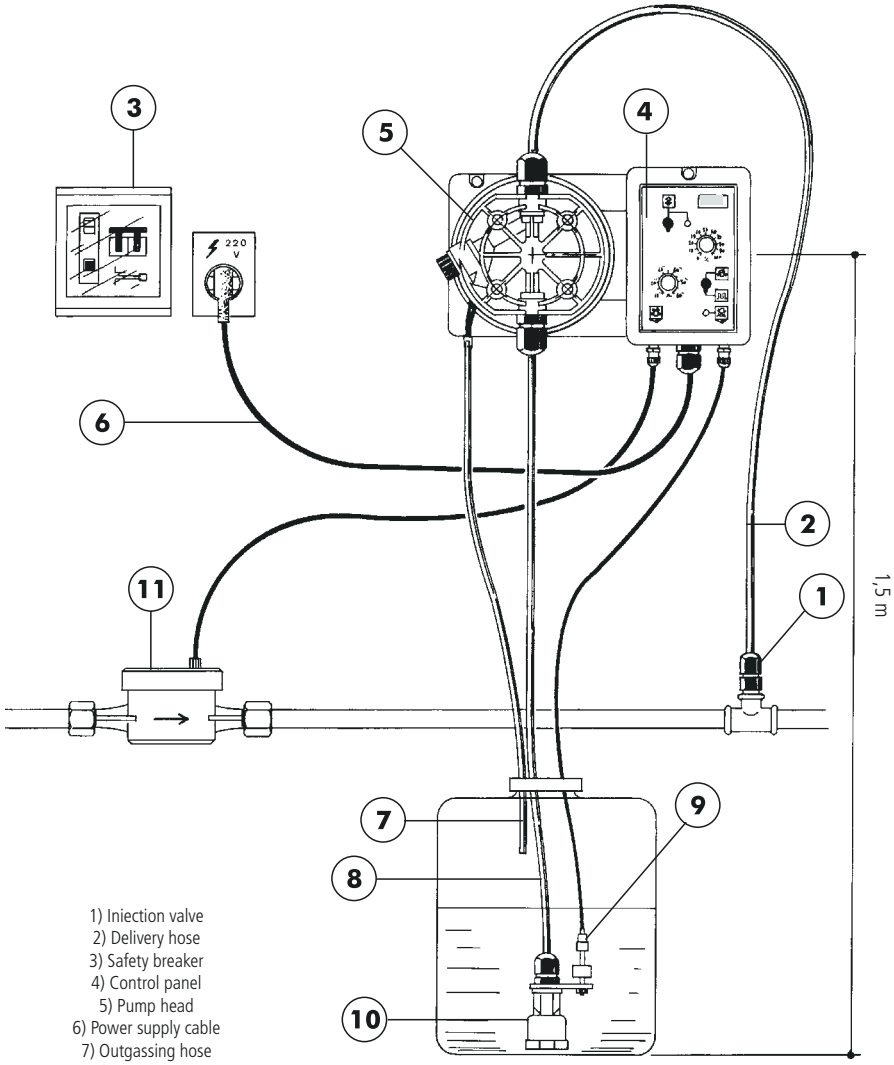


1) Iniection valve
2) Delivery hose
3) Safety breaker
4) Control panel
5) Pump head
6) Power supply cable
7) Outgassing hose
8) Suction hose
9) Level probe
10) Foot filter
11) Pulse water meter

# Appendix N. "TPV" pump installation drawing

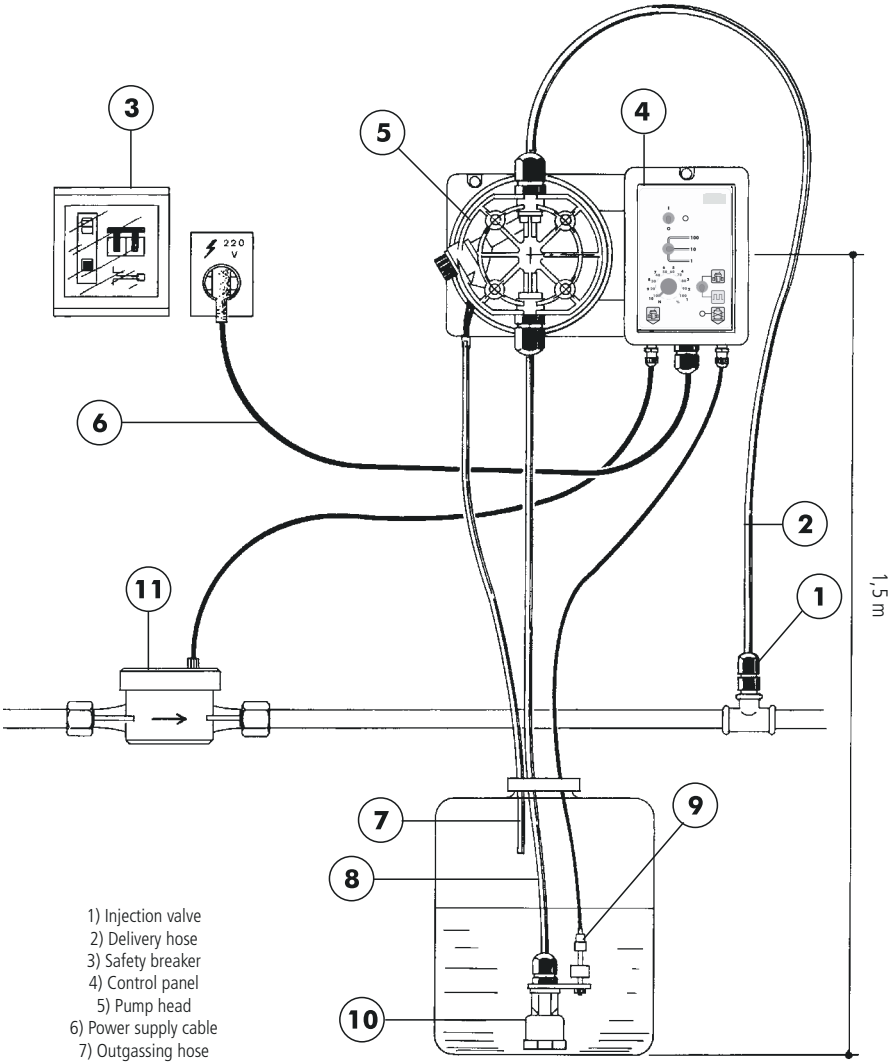


1) Injection valve
2) Delivery hose
3) Safety breaker
4) Control panel
5) Pump head
6) Power supply cable
7) Outgassing hose
8) Suction hose
9) Level probe
10) Foot filter
11) Pulse water meter

# Appendix O. Exploded view mod. T/TA

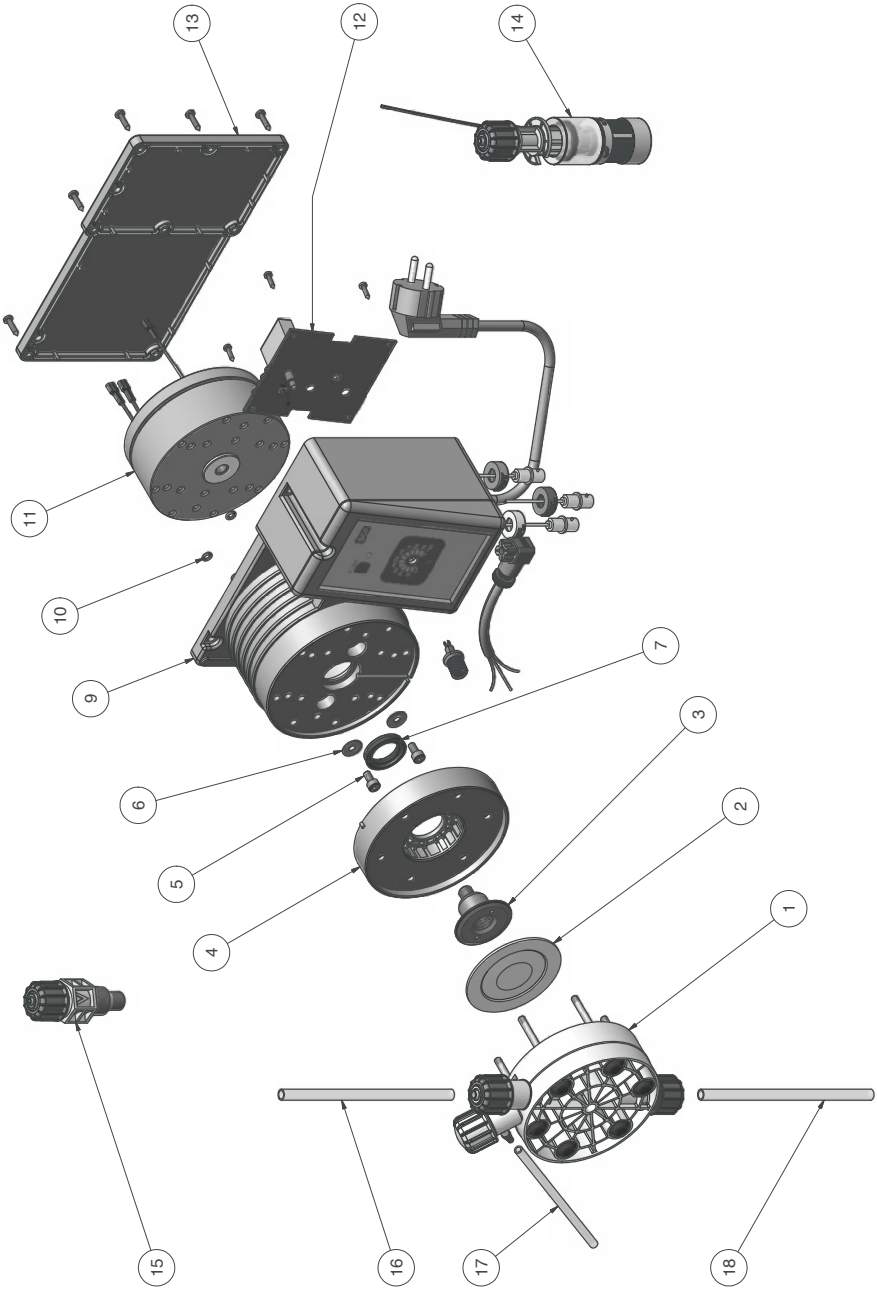

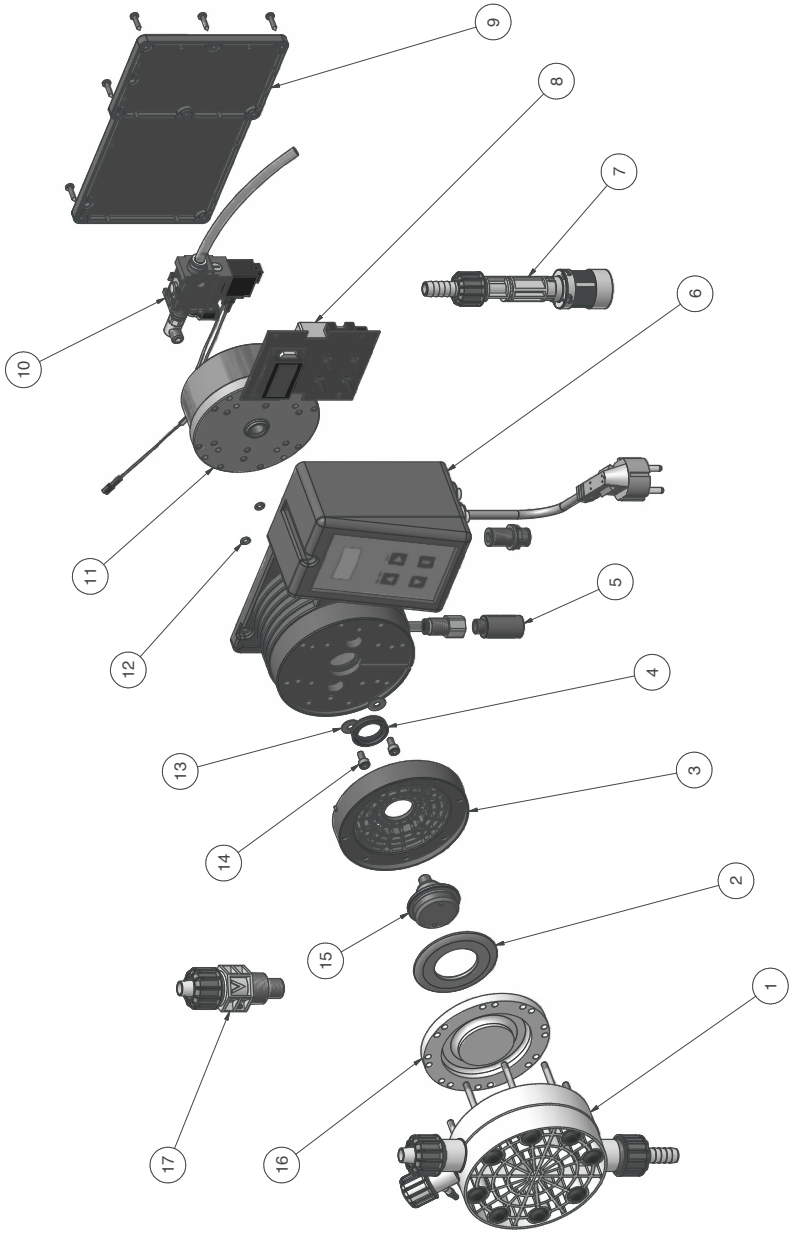
9
8
7
6
10
11
12
5
4
13
3
14
2
15
1
17
16

**PRODUCT SERVICE REPAIR FORM**

ENCLOSE THE PRESENT FORM TO THE DELIVERY NOTE

**DATE** .....

**SENDER**

Company name.....

Address .....

Phone no. .....

Contact person.....

**PRODUCT TYPE (see product label)**

DEVICE CODE .....

S/N (serial number).....

**OPERATING CONDITIONS**

Location/installation description .....

.....

Chemical .....

Start-up (date) ..... Running time (approx. hours).....

REMOVE ALL THE LIQUID INTO THE PUMP HEAD AND DRY IT BEFORE PACKAGING IN ITS ORIGINAL BOX.

**DESCRIPTION OF PROBLEM**

☐ MECHANICAL

- Wear parts.....
- Brekage/other damages .....
- Corrosion.....
- Other.....

☐ ELECTRICAL

- Connections, connector, cables .....
- Operating controls (keyboard, display, etc.) .....
- Elettronics.....
- Other.....

☐ LEAKS

- Connections.....
- Pump head .....

☐ NOT OR INADEQUATE FUNCTION/OTHER

.....

.....

.....

**I declare that the dosing pump is free of any hazardous chemical.**

Signature of the compiler

Company stamp

# P Appendix. Summary

GENERAL SAFETY GUIDELINES....2
PURPOSE OF USE AND SAFETY....3
ENVIRONMENTAL SAFETY....4
LABELS....4
SPARE PARTS....4

1. Introduction....6
2. Unpacking....7
3. Pump's description....8
4. Before to Install warnings....9
5. Installation draw....10
6. Hydraulic installation....11
7. Self-Venting pump head installation....14
8. Electrical Installation....15
8. Level alarm....17
9. Models....18
10. Priming....26
11. Troubleshooting....27
12. Fuse and main board replacement....28
13. Main Board....29
A Appendix. Maintenance....30
B Appendix. Construction Materials and Technical info....32
C Appendix. Delivery Curves....34
C Appendix. Self-Venting delivery curves....35
D Appendix. Dimensions....36
E Appendix. Chemical Compatibility Table....37
F Appendix. Hoses resistance table....38
G Appendix. "TCL" pump installation drawing....39
H Appendix. "TCO" pump installation drawing....40
I Appendix. "TIC" pump installation drawing....41
L Appendix. "TIS" pump installation drawing....42
M Appendix. "TTE" pump installation drawing....43
N Appendix. "TPV" pump installation drawing....44
O Appendix. Exploded view mod. T/TA....45
P Appendix. Exploded view mod. TAC....46

## PRECAUTIONS RELATING TO DIRECTIVES, REGULATIONS AND STANDARDS

### § CE/EU and UKCA marking

We guarantees that this product meets the essential requirements of the applicable Directives and Regulations based on the following specifications. Please carefully consider the following specifications for use of the product in European Union member countries and the United Kingdom.

**• CE/EU harmonized directives and standards**

**Directives**
DIRECTIVE 2006/42/EC
DIRECTIVE 2014/35/EU
DIRECTIVE 2014/30/EU
DIRECTIVE 2011/65/EU
DELEGATED DIRECTIVE (EU) 2015/863

**Harmonized standards**
EN ISO 12100
EN 809
EN ISO 20361
EN IEC 61326-1
EN 61010-1
EN IEC 63000

**• UKCA harmonized regulations and standards**

**Regulations**
2008 No. 1597
2008 2016 No. 1091
2016 No. 1101
2012 No. 3032

**Harmonized standards**
BS EN ISO 12100
BS EN 809
BS EN ISO 20361
BS EN IEC 61326-1
BS EN 61010-1
BS EN IEC 63000

**Disposal of end-of-life equipment by users**

This symbol warns you not to dispose of the product with normal waste. Respect human health and the environment by giving the discarded equipment to a designated collection center for the recycling of electronic and electrical equipment. For more information visit the online site.

When dismantling a pump please separate material types and send them according to local recycling disposal requirements. We appreciate your efforts in supporting your local Recycle Environmental Program. Working together we'll form an active union to assure the world's invaluable resources are conserved.