R990525

AMS MF - AMSA MF - AMS AC MF - AMS MF LPV

PRODUCT LABEL

AMS MF

AMSA MF

AMS AC MF

SOLENOID DRIVEN METERING PUMPS
WITH DIAPHRAGM

EN

OPERATING MANUAL

This operating instructions contains safety information that if ignored can endanger life or result in serious injury.

Read these instructions **carefully** before use and keep them for future reference. Original instruction.

Information and specifications on this manual could be uncorrect or could have printing errors. Specifications are subject to change without notice.

Version: R1-06-17

Product Description *Descrizione Prodotto*	Electromagnetic dosing pump, AMS series *Pompa dosatrice elettromagnetiche, serie AMS*		
Product Identification Codes (the "_" symbols complete the product code based on the configuration of the variants) *Codici Identificativi Prodotto* *(i simboli "_" completano il codice del prodotto in base alla configurazione delle varianti)*	AMF _____ APH _____ ARH _____ AMU _____ ACP _____ AUO _____	AAF _____ AAA _____ AAR _____ AAU _____ AAL _____ AAC _____	AMC _____ ALA _____ AOA _____

GENERAL SAFETY GUIDELINES

Operating, installing, or maintaining the unit in any way that is not covered in this manual could cause death, serious personal injury, or damage to the equipment.

ICON

This manual use the following safety message icon:

Danger!
Indicates a hazardous situation which, if not avoided, will result in death or serious injury.

Warning!
Indicates a hazardous situation which, if not avoided, could result in death or serious injury.

Important - A practice not related to personal injury or additional information.

Cross reference - An instance which refers to related information elsewhere in the same document

PURPOSE OF USE AND SAFETY

METERING PUMP IS INTENDED FOR CHEMICAL DOSING AND DRINKING WATER TREATMENT.

Do not use in explosive area (EX).
Do not use with flammable chemicals.
Do not use with radioactive chemicals.

Use after a proper installation.

Use the pump in accordance with the data and specifications printed on the label.

Do not modify or use in a manner inconsistent with the provisions of the operating manual.

Keep the pump protected from sun and water. Avoid water splashes.

In emergencies the pump should be switched off immediately. Disconnect the power cable from the power supply.

When using pump with aggressive chemicals observe the regulations concerning the transport and storage of aggressive fluids.

When installing always observe national regulations.

Manufacturer is not liable for any unauthorized use or misuse of this product that may cause injury, damage to persons or materials.

Pump must be accessible at all times for both operating and servicing. Access must not be obstructed in any way.

Feeder should be interlocked with a no-flow protection device.

Pump and accessories must be serviced and repaired by qualified and authorized personnel only.

Before any operation:
- **always read chemical Material Safety Data Sheet (MSDS);**
- **always wear protective clothing;**
- **always discharge the liquid end before servicing the pump.**
- **empty and rinse the liquid end before work on a pump which has been used with hazardous or unknown chemicals.**

This equipment requires regular maintenance to ensure potability requirements of the water and maintenance of improvements as declared by the manufaturer.

ENVIRONMENTAL SAFETY

Work area
Always keep the pump area clean to avoid and/or discover emissions.

Recycling guidelines

EWC code: 16 02 14

Always recycle according to these guidelines:
1. If the unit or parts are accepted by an authorized recycling company, then follow local recycling laws and regulations.
2. If the unit or parts are not accepted by an authorized recycling company, then return them to the nearest representative.

Waste and emissions regulations
Observe these safety regulations regarding waste and emissions:
- Dispose appropriately of all waste.
- Handle and dispose of the dosed chemical in compliance with applicable environmental regulations.
- Clean up all spills in accordance with safety and environmental procedures.
- Report all environmental emissions to the appropriate authorities.

LABEL

Fig. 1. Product label.

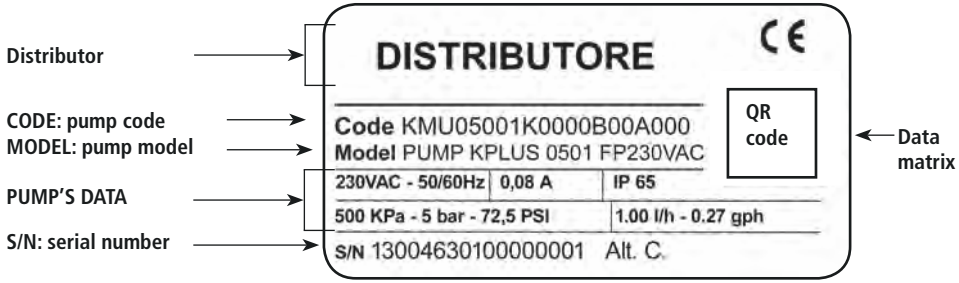

SPARE PARTS

For spare parts orders or any other communication, refer to the pump's label.
Code (CODE) and serial number (S / N) uniquely identify the pump.

TRANSPORTATION AND STORAGE

A not suitable transportation or storage can cause damages.

Use origianal box to pack the pump.

Observe storage conditions also for transportation.

Although packed, always protect the unit against humidity and the action of chemicals.

Before return the dosing pump to the manufacturer Repair service, drain the chemical from pump head and rinse it. Refer to **Shutdown procedure.**

Fill the PRODUCT SERVICE REPAIR FORM and send it with the dosing pump.
Repair service is not accepted if PRODUCT SERVICE REPAIR FORM is missing.

DO NOT TRASH PACKAGING. USE IT TO RETURN THE PUMP.

Transportation and storage temperature ..... 10-50°C (32-122°F)
Umidity ..... 95% relative humidity (not condensed)

1. INTRODUCTION

1.1 AMS MF Series

AMS MF is designed for low/middle dosing of chemicals.
The pump has different working modes: Constant, Divide, Multiply, ppm, perc, mlq, batch, volt, mA.

AMS MF has got:
- STAND-BY input
- SEFL (flow sensor) input
- LEVEL input
- ALARM contact output.

Flow rate is determined by the stroke length and by the stroke speed. The stroke length is adjustable from 0 to 100% using the stroke length adjustment knob. However dosing accuracy is guarantee within an adjustment range from 30% to 100%.

All control and setup parameters are available through a digital keyboard and they are displayed on a LCD backlit display.

✎ **Note: some functions described into this manual may need accessories not included into the pump packaging.**

1.2 AMSA MF Series

AMSA MF is the AMS MF version with **self-venting pump head**.
Self-venting pump head must be used when using chemicals that produce gas (i.e. hydrogen peroxide, ammonium, sodium hypoclorite at particular conditions).
For connections ☞ **"Self-Venting pump head installation".**

1.3 AMS AC MF Series

AMS AC MF is the AMS MF version with **double supply: compressed air and power supply.** Compressed air without lubrifiant and/or condensed water. Air supply pressure range must be from 6 to 10 bar. For connections ☞ p. 9.

1.4 AMS MF LPV: viscosity up to 8.000 cPs

AMS MF LPV is the AMS version with PMMA pump head for **liquids with max viscosity 8.000 cPs.**
Funtioning mode is the same as AMS MF.
Flow may change according to viscosity. Flow rates indicated refer to a measure with water.
Liquid ends: 3/4" injection valve, 16x22 PVC suction hose and 8x12 PE injection hose.
Not included: Stainless steel foot filter with valve.

1.5 Working modes

Pump can work in differents ways:

MODE	WORKING MODES
CONSTANT	Pump doses at a constant rate set in "SPH" (strokes for hour), "SPM" (strokes for minute) or "LPH" (litres per hour) parameters set during program session.
DIVIDE	External pulses from a water meter are divided by a value set during program session. The pump doses with a rate determined by this parameter.
MULTIPLY	External pulses from a water meter are multiplied by a value set during program session. The pump doses with a rate determined by this parameter.
PPM	Dosing rate is determined by pulses from a water meter on the base of set PPM, chemical product concentration (%) and quantity for each single stroke set during program session.
PERC	Dosing rate is determined by pulses from a water meter on the base of set PERC (%), chemical product concentration (%) and quantity for each single stroke set during program session.
MLQ	Dosing rate is determined by pulses from a water meter on the base of set MLQ (milliliters per quintal), chemical product concentration (%) and quantity for each single stroke set during program session.
BATCH	Signal from an external contact starts the pump to dose product or to produce an amount of strokes set during program session.
VOLT	Voltage from an external device drives the pump that doses proportionally using a minimum and maximum of strokes for minute set during program session (0-10 VDC).
mA	Current from an external device drives the pump that doses proportionally using a minimum and maximum of strokes for minute set during program session.

✎ In MULTIPLY, DIVIDE, PPM, PERC, MLQ working modes, the pump, connected to a pulse emitter water meter, shows the instant flow. The pump can divide or multiply up to 999 when into these working modes.

2. UNPACKING

Included into package

QUANTITY	STANDARD PACK	**AMS MF**	**AMSA MF**	**AMS MF LPV**
n. 4	ø6 dibbles	●	●	●
n. 4	4,5 x 40 self tapping screws	●	●	●
n. 1	5 X 20 delayed fuse	●	●	●
n. 1	level probe with axial foot filter (PVDF)	●	●	
n. 1	0,3 bar injection valve (PVDF)	● 1/2"	● 1/2"	● 3/4" STAINLESS STEEL
m 2	delivery hose [1]	● PVDF	● PVDF	● PE
m 2	suction hose [1]	● PE/PVC	● PE	● PVC
m 2	venting hose	● PE/PVC	● PE	
m 0,3	hose / syringe			● PVC
m 2,5	external signal cable	●	●	●
m 2	stand-by/alarm cable "	●	●	●
n.1	operating manual	●	●	●

[1] If hose is 6x8 there is only a 4meters long hose. Cut to obtain suction and delivery hoses.

PLEASE DO NOT TRASH PACKAGING.
IT CAN BE USED TO RETURN THE PUMP.

Fig. 3. AMS MF - AMSA MF dosing pumps

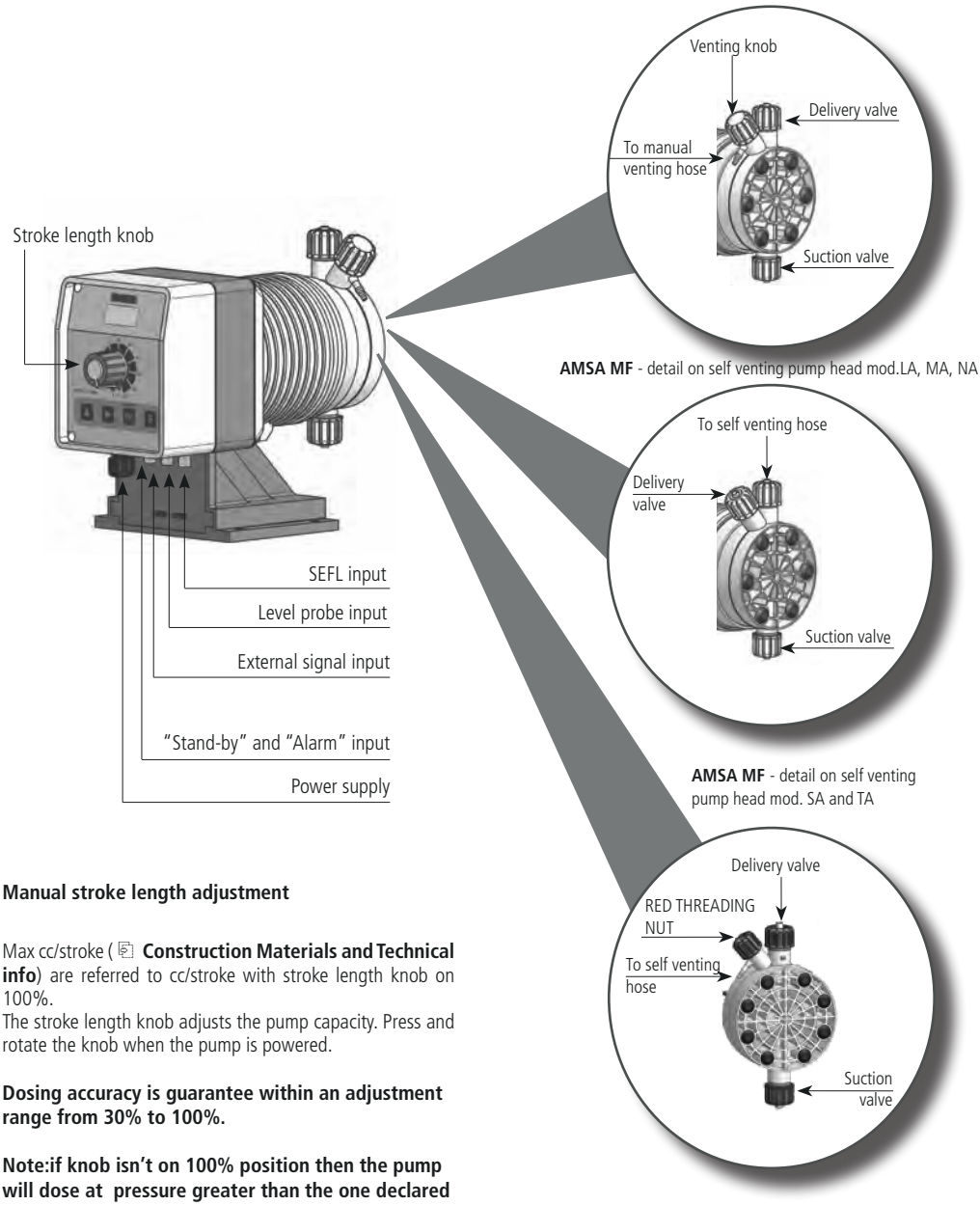

Manual stroke length adjustment

Max cc/stroke (**Construction Materials and Technical info**) are referred to cc/stroke with stroke length knob on 100%.
The stroke length knob adjusts the pump capacity. Press and rotate the knob when the pump is powered.

Dosing accuracy is guarantee within an adjustment range from 30% to 100%.

Note:if knob isn't on 100% position then the pump will dose at pressure greater than the one declared on label.

Fig. 4. AMS AC MF dosing pumps

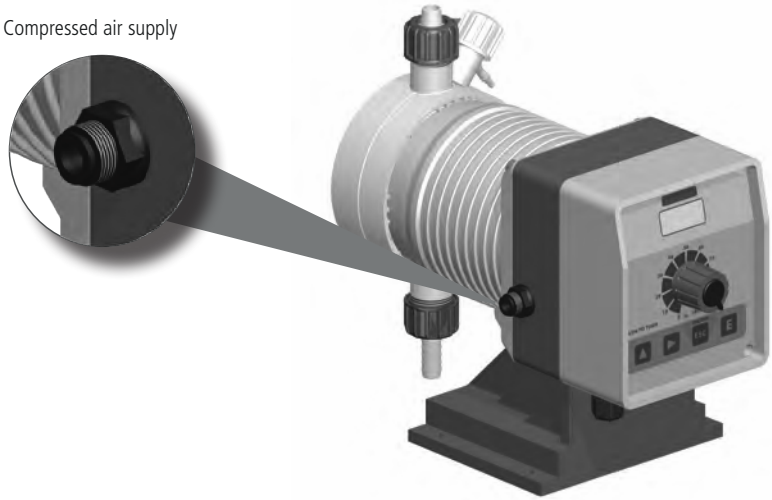

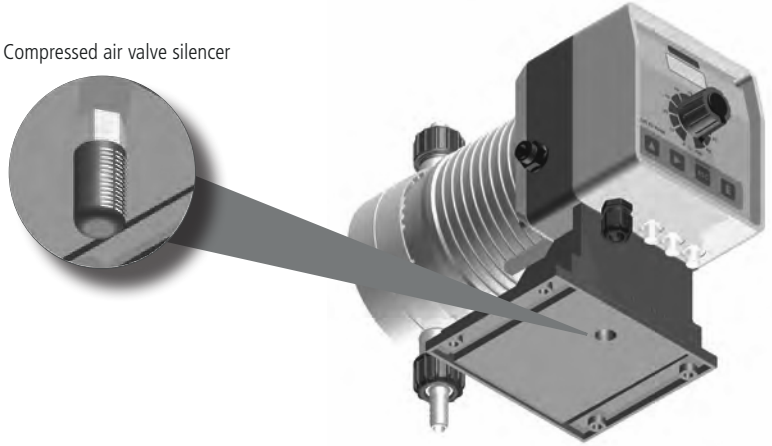

Compressed air without lubrifiant and/or condensed water.
Air supply pressure range must be from 6 to 10 bar.

4. BEFORE TO INSTALL WARNINGS

Pump's installation and operativity is made in 4 main steps:

Pump's installation
Hydraulic Installation (hoses, level probe, injection valve)
Electrical Installation (main power connection, SEFL installation, priming)
Programming the pump.

Before to start, please read carefully the following safety information.

Protective clothes

Wear always protective clothes as masks, gloves, safety glasses, ear plugs or ear muffs, and further security devices during ALL installation procedure and while handling chemicals.

Installation location

Pump must be installed in a safety place and fixed to the table / wall to avoid vibration problems!

Pump must be installed in a easy accessible place!

Pump must be installed in horizontal position!

Avoid water splashes and direct sun!

Hoses and Valves

Suction and delivery hoses must be installed in vertical position!
All hoses connections must be performed using only hands' force!
No tongs required!

Delivery hose must be firmly fixed to avoid suddenly movements that could damage near objects!

Suction hose must be shorter as possible and installed in vertical position to avoid air bubbles suction!

Use only hoses compatibles with product to dose! See chemical compatibility table. If dosing product is not listed please consult full compatibility table or contact chemical's manufacturer!

Feeder should be interlocked with a no-flow protection device to automatically shut-off the pumps when there is no flow!

Adequate measures shall be taken to prevent cross connection of chemicals!

Chemical feeding must be stopped during backwash cycles and periods of noflow as these conditions may introduce the potential for chemical overdosing. Not doing so may result in elevated chemical concentrations and hazerdous gas introduction into the pool or spa.

5. INSTALLATION DRAW

Pump must be installed in a stable support (for example a table) at a maximum height (**from tank's bottom**) of **1,5 meters**.

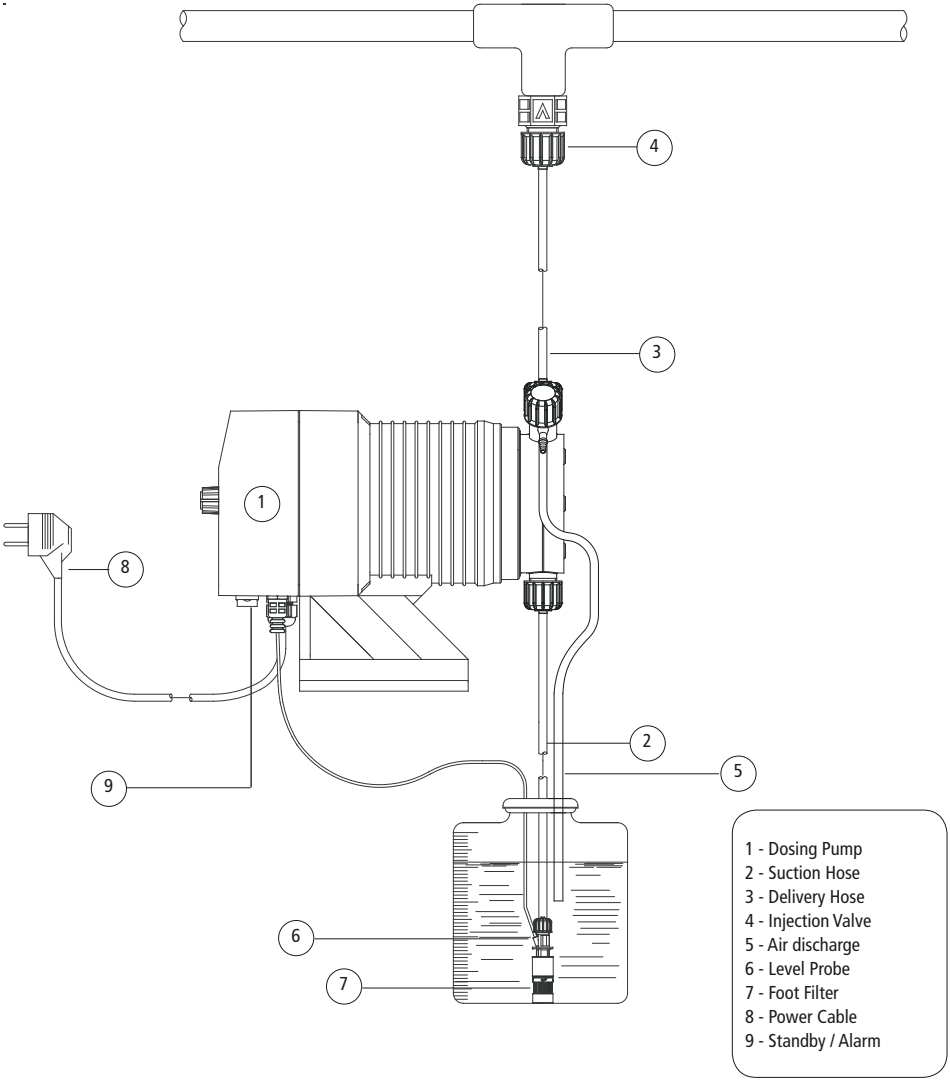

6. HYDRAULIC INSTALLATION

Hydraulic connections are:

Suction Hose with level probe and foot filter
Delivery Hose with injection valve
Venting hose

6.1 Suction Hose.

Completely unscrew tightening nut from pump's head and remove assembling components: tightening nut, holding ring and pipe holder.

Assembly as shown in fig. (A). Insert hose into pipe holder until it reaches the bottom.

Lock hose on pump's head by screwing down the tightening nut.
Use only hands to do it!

Connect other side of the hose to the foot filter using the same procedure.

fig. (A)

6.2 Assembling foot filter with level probe.

Level probe must be assembled with foot filter using the provided kit.
Foot valve is made to be installed into tank's bottom without sediments priming problem.

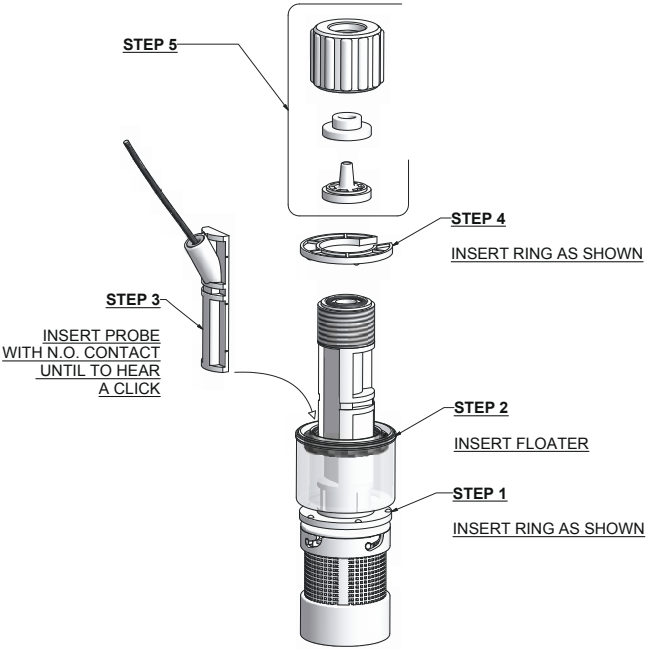

Connect BNC from level probe into pump's level input (front side of the pump).
Put level probe assembled with foot filter into tank's bottom.

Warning: If there is a mixer installed into tank, install a suction lance instead of level probe / foot filter.

6.3 Delivery Hose.

Completely unscrew tightening nut from pump's head and remove assembling components: tightening nut, holding ring and pipe holder.

Assembly as shown in fig. (A). Insert hose into pipe holder until it reaches the bottom.

Lock hose on pump's head by screwing down the tightening nut.
Use only hands to do it!

Connect other side of the hose to the injection valve using the same procedure.

6.4 Injection Valve.

Injection valve must be installed on plant from water's input.
Injection valve will open at pressure greater than 0,3bar.

6.5 Venting hose.

Insert one side of venting hose into venting connector as shown in fig (C).

Insert other side of venting hose into product's tank.
During priming procedure product exceeding will flow into tank.

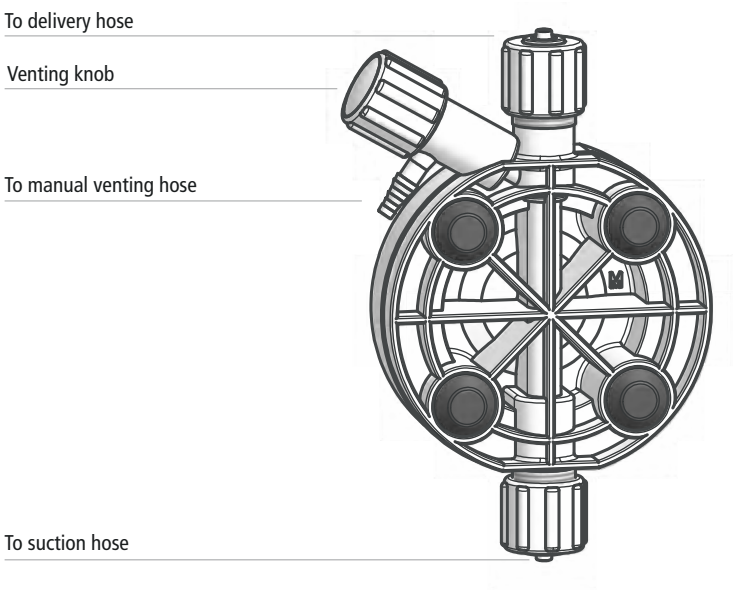

fig. (C)

For priming procedure see **PRIMING**.

it's allowed to lightly bend venting hose.

During calibration procedure ("TEST") insert venting hose into BECKER test-tube.

7. SELF-VENTING PUMP HEAD INSTALLATION

Self-venting pump head must be used when using chemicals that produce gas (i.e. hydrogen peroxide, ammonium, sodium hypoclorite at particular conditions).
Refer to fig. 4-5 for delivery and venting hose.
Hoses assembling procedures are the same described before.

Fig. 5. Self-venting models pump head: LA, MA, NA (AMSA).

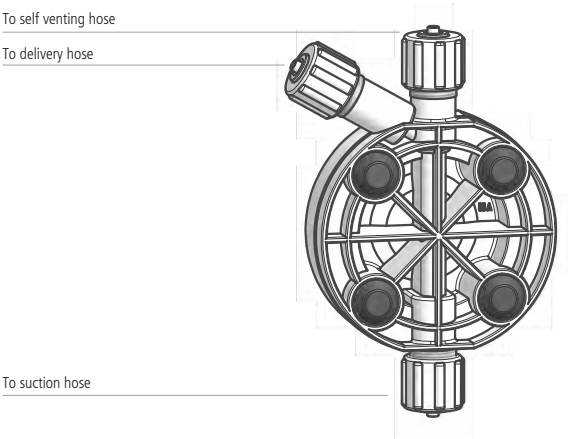

Fig. 6. Self-venting models pump head: SA, TA (AMSA).

ON "SA" AND "TA" MODELS THERE IS A RED THREADING NUT

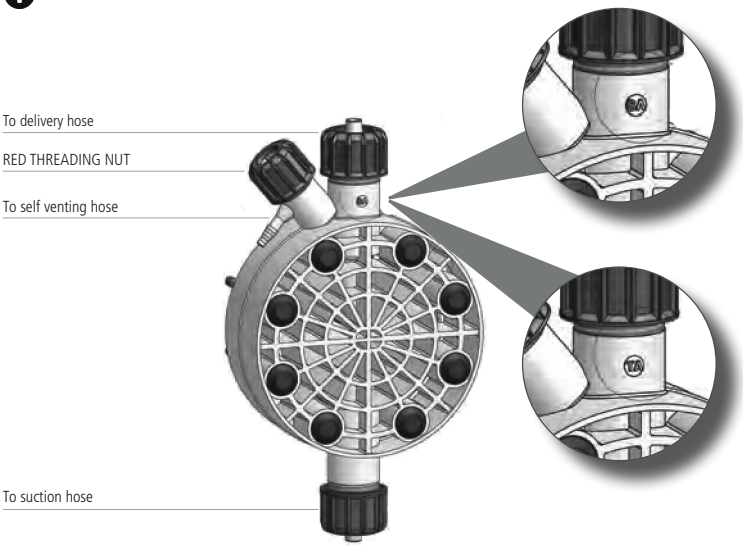

8. ELECTRICAL INSTALLATION

All electrical connections must be performed by **AUTHORIZED AND QUALIFIED** personnel only.
Before to proceed, please, verify the following steps:

- verify that pump's label values are compatible with main power supply.

- pump must be connected to a plant with a differential switch (0,03A sensitivity) if there isn't a good ground.

- to avoid damages to the pump do not install it in parallel with heavy inductance load (for example: engines). A relay switch must be used. See below picture.

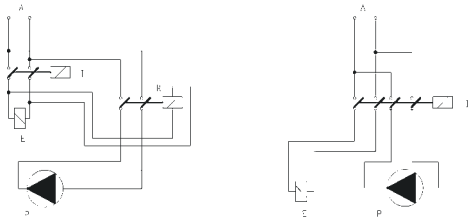

P - Dosing Pump
R - Relay
I - Switch or safety device
E - Electrovalve or inductance load
A - Main Power

- On pump's mother board there is a further protection against over voltages (275V - 150V) and distribution line noises (4KV for max 50µsec) as shown:

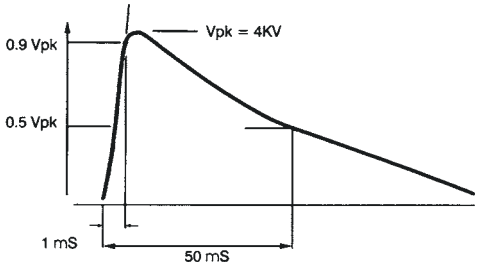

WARNING
IF EQUIPMENT <u>IS SUPPLIED</u> WITH A PLUG:

If an appliance coupler or separable plug is used as the disconnecting device, it shall be readily identifiable and easily reached by the operator. For single-phase portable equipment, a plug on a cord of length not greater than 3m is considered to be easily reached.

WARNING
IF EQUIPMENT <u>IS NOT SUPPLIED</u> WITH A PLUG:

a) a switch or circuit-breaker shall be included in the building installation
b) it shall be in close proximity to the equipment and within easy reach of the operator
c) it shall be marked as the disconnetting device for the equipment

Once verified previous steps proceed as follows:

- check that "BNC" of level probe has been connected as described in "Hydraulic Installation" chapter.

- connect "BNC" and external signal to pump's "INPUT" connector (**-braided shield cable; +center conductor)**
This input may be used as follows:
- as pulse sender water meter or
- as startup contact for "BATCH" mode or
- as voltage input for "VOLT" mode or
- as current input for "mA" mode

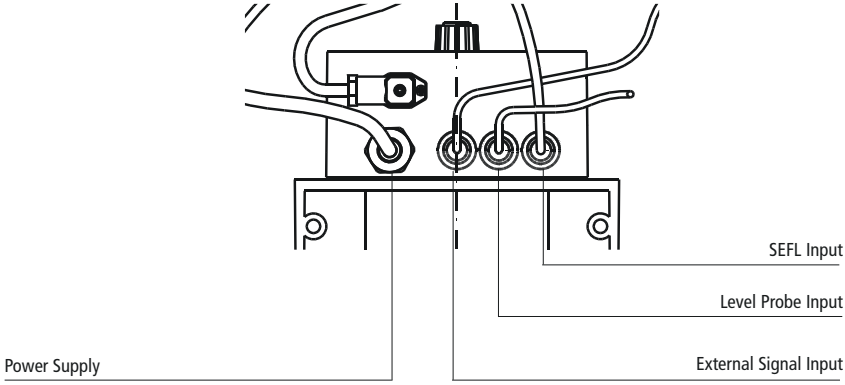

- connect alarm and/or stand-by signal as described below fig (D):

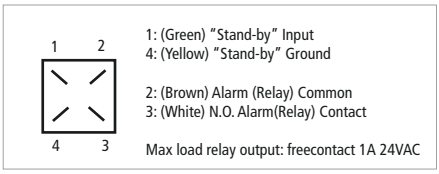

Notes:
- "Alarm" signal isn't fuse protected
- "Standby" signal has main priority on pump's enabling / disabling.

fig (D)

- proceed to "SEFL" connection (Flow sensor is optional) as described in page 60.

IF NOT USED, PROTECT THE MINI DIN PLUG WITH THE BLACK RUBBER CAP LOOSE IN THE ACCESSORIES BAG.

Connection to water meter with HALL effect (option)

Metering pumps for connection to an Hall effect water meter have got a three wires signal cable. If the water meter is equipped with the pump, there is a MPM plug to connect the pump. Refer to **Main board** connection.

Wires cable connections

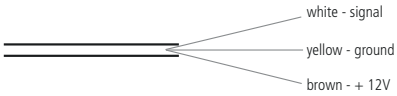

9. BASIC SETTINGS

LCD backlit display

Storke Lenght Knob

Scroll and increase digit

Turn the pump on or off and exit from setup menu (without saving parameters)

Enter / exit from setup menu (saving parameters)

The "AMS MF" pump is equipped with a keyboard.To avoid any misunderstanding during next chapters all keys will be described as shown on this legend:

▲ **"UP" key**

ON/OFF ESC **"ESC" key**

▶ **"RIGHT" key**

E **"E" key**

Menu navigation:

To enter into programming mode press and keep pressed **"E" key** from main screen (fig.3):

upkeep 000m 00s	STROKES 100 SPM	batch waiting

fig.3

Main screen (fig.3) may appear different if "PPM" or "BATCH" mode is enabled. After about 4 seconds the pump will show the password screen (fig.5):

password 0000

fig.5

Default password is "0000". Just press **"E"** key. Otherwise insert password using **"UP"** and **"RIGHT"** keys.

Note. When the pump is started for the first time it is necessary to set the navigation language and the unit of measurement.

Saving / Discarding changes / Activating working mode

Once edited data into setup menu it's possible to save them by pressing **"E"** key or to discard them by pressing **"ESC"** key.

To activate a working mode (Constant, Divide, Multiply, PPM, PERC, MLQ, Batch, Volt, mA) select the required mode and confirm it using **"E"** key.

Turning on and off the pump

"ESC" key has a double function. It can be used to discard all changes made into setup mode or to turn on/off the pump. To turn on/off the pump press and keep pressed this key while in main screen (fig.3). The pumps will show:

OFF
----

fig.6

To return into operating mode press **"ESC"** key.

Alarm output logical working.

The pump has an "Alarm" output that changes its status (from N.O. to N.C. or viceversa) when a signal is received from "LEVEL" and/or "SEFL" and/or "STAND-BY". To set this alarm refer to related chapter.

Full menu / Short Menu mode

When entering into SETUP display shows access mode menu:

If this is the first time into SETUP menu then the pump will automatically set itself into "FULL" menu mode as shown in fig. A. Just press "E" key to confirm. This mode will show all pump functions and working modes.

FULL
MENU

fig. A

SHORT
MENU

fig. B

Next time the SETUP menu will be reached it will possible to operate with "SHORT" menu configuration to change only selected mode parameters as shown in fig. B. Press "E" to confirm.

Note: "SHORT" menu option is not available during first time into SETUP menu or after a reset.

10. Priming

To proceed follow these steps: connect all hoses to the pump; open dischage valve by completely turning the discharging knob (counter clock-wise). Power up the pump and turn stroke lenght knob to 100%. After pump's intro (fig.1):

aMS MF
R: 1.xx

fig.1

the pump will show the "Delay" (pump's activation delay) as shown fig.2:

WAITING
00:59

fig.2

Press any key to skip the "Delay". Pump will show "Srokes" (actual strokes) as shown in fig.3:

STROKES
100 SPM

fig.3

In any working mode, if a SEFL is installed and enabled (see SEFL Setup procedure), the display will show the icon (asterisk as in fig. 4):
- if SEFL works correctly, the asterisk blinks to any pulses given by the solenoid;
- if the asterisk does not appear, there is an anomaly (i.e.: hoses and/or valves are obstructed, SEFL in not connected, etc.).

* STROKES
100 SPM

fig.4

Press and keep pressed the "RIGHT" key to enter into priming mode. Pump will go for 30 seconds into priming mode as shown in fig.5.

PRIMING
30 Sec.

fig.5

When the chemical begins to flow out from the outgassing hose then completely close the outgassing knob (except for self-venting pump heads). This ends the priming procedure. If countdown for priming is not yet ended press **"ESC"** key.

Now the pump is operative. Proceed to setup and programming.

11. Pump's functions summary

During pump's working mode is it possible to see furthers working information.
Press more times the **"UP"** key to cycle through following information:

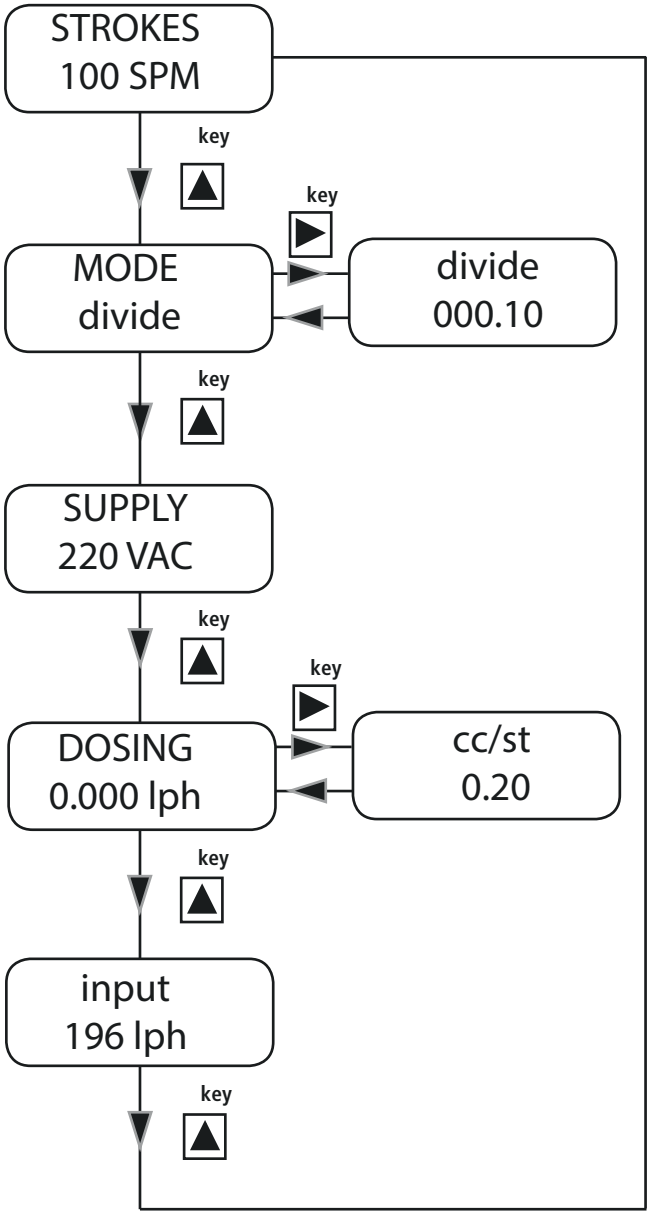

Working Mode

Power Supply Voltage

Liters/Hour or Gallons/ Hour Dosage

External signal value (in Volt and mA working mode) or actual system flow (Multiply, Divide and PPM working mode). This item is not present in Constant working mode.

12. Pump's functions summary- ALARMS

If any alarm is active, in the menù "**Pump's functions summary**" a general alarm display will show the **number** of alarm active at the moment. Enter into this menu with "**RIGHT**" key.
The windows displayed show which alarms are active.

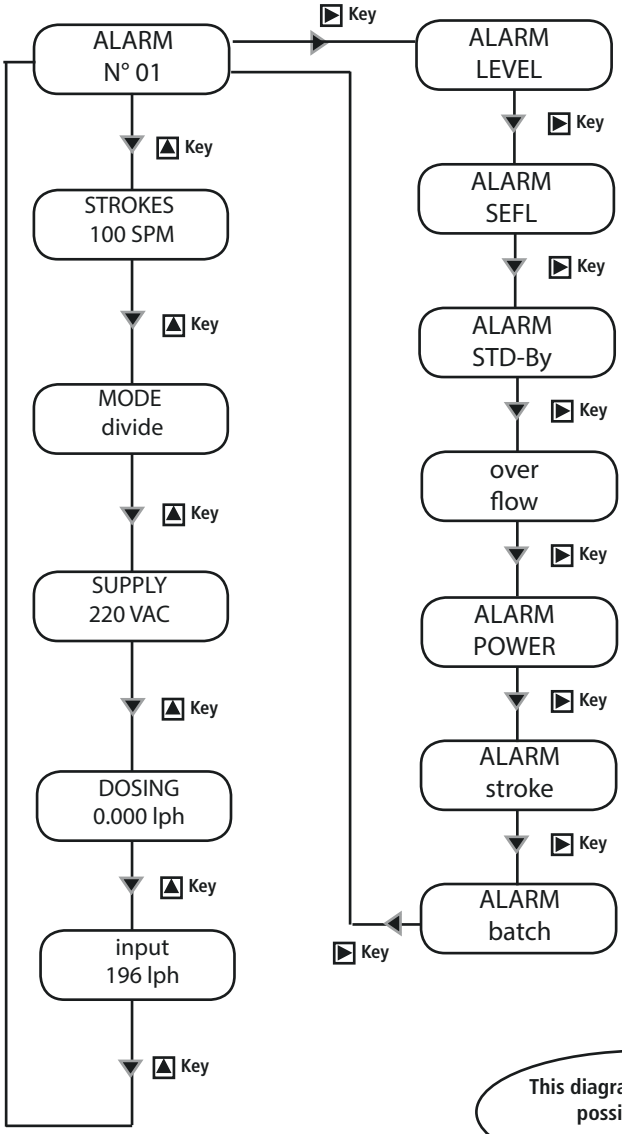

Level alarm: the level probe signals the product end.

SEFL alarm signals an anomaly for the SEFL.

Stand-by alarm signals the pump stop.

Over flow alarm (when using "Divide", "Multiply", "ppm" working mode): signals the working frequency of the pump is higher than the values on the label.

Power alarm signals the power supply is out of range (from 180 to 260 VAC).

Stroke alarm signals that it has been set a capacity higher than the value on the label.

Batch alarm signals that the pumps has received a pulse while in Batch working mode.

This diagram shows all the possible alarms.

Note: If an alarm occurs, the pumps working process is interrupted and you will see this Symbol „#" blinking on the screen

13. Quick Guide - Main Menu (Prog [1] Mode)

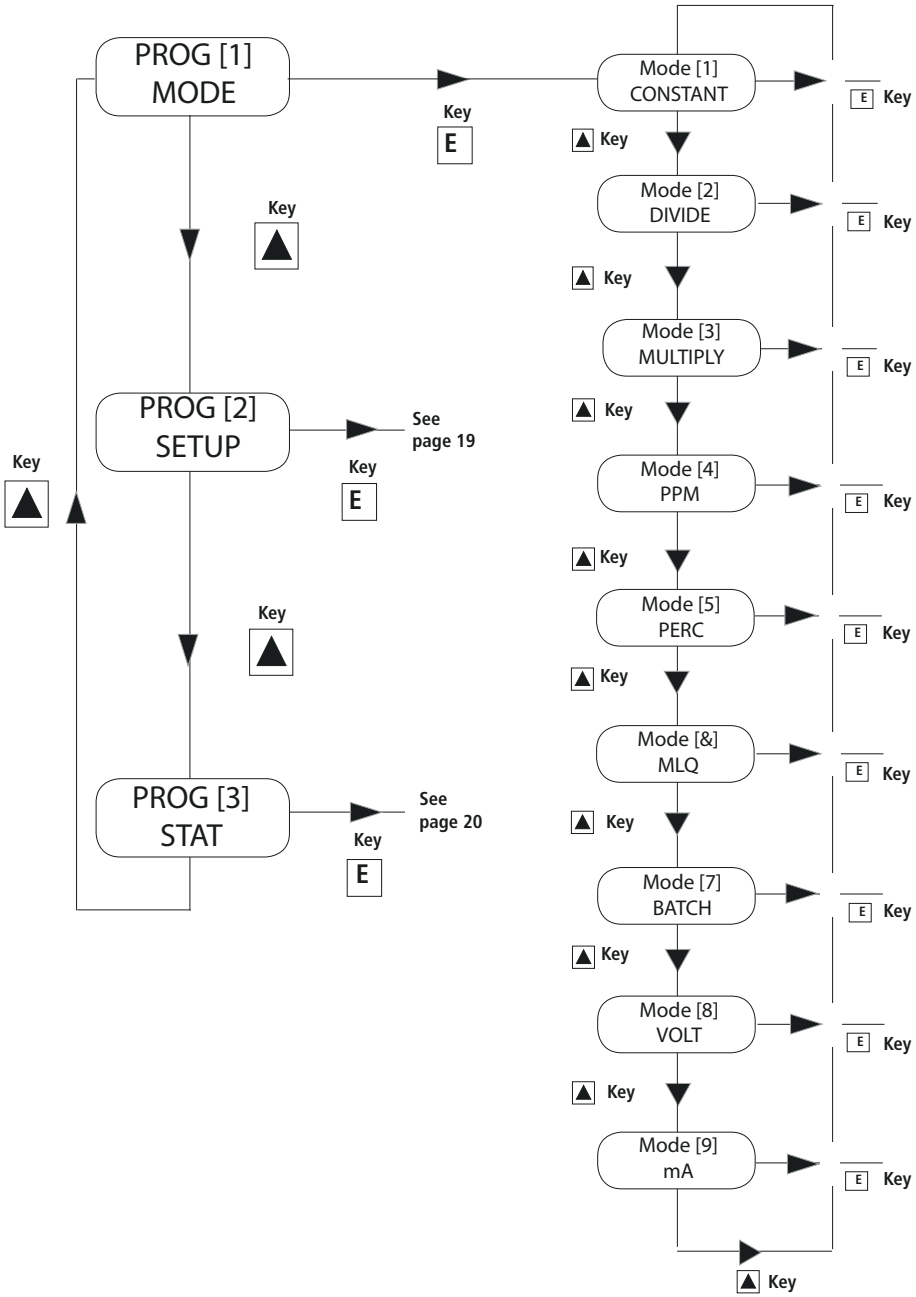

14. Quick Guide - Main Menu (Prog [2] Setup)

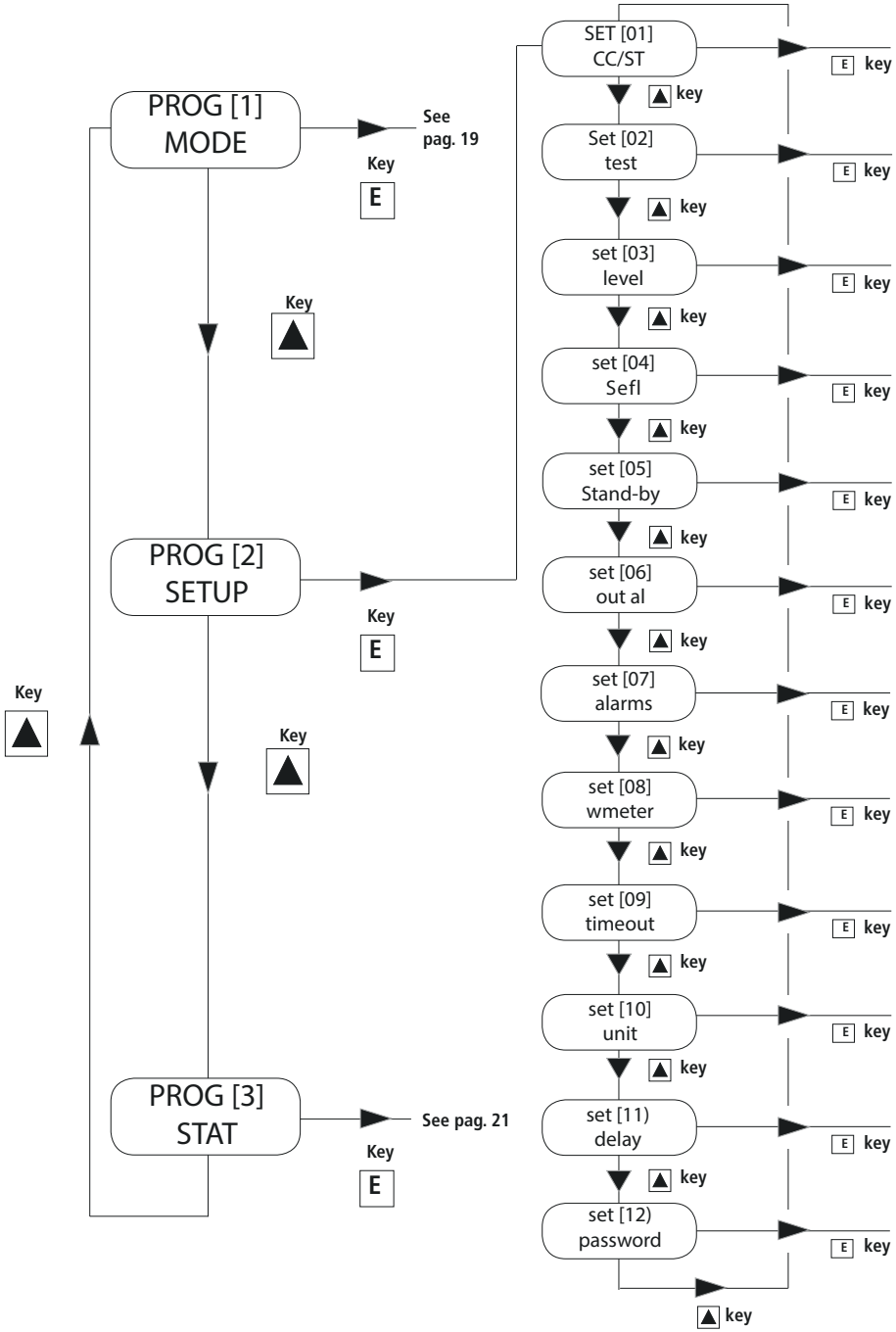

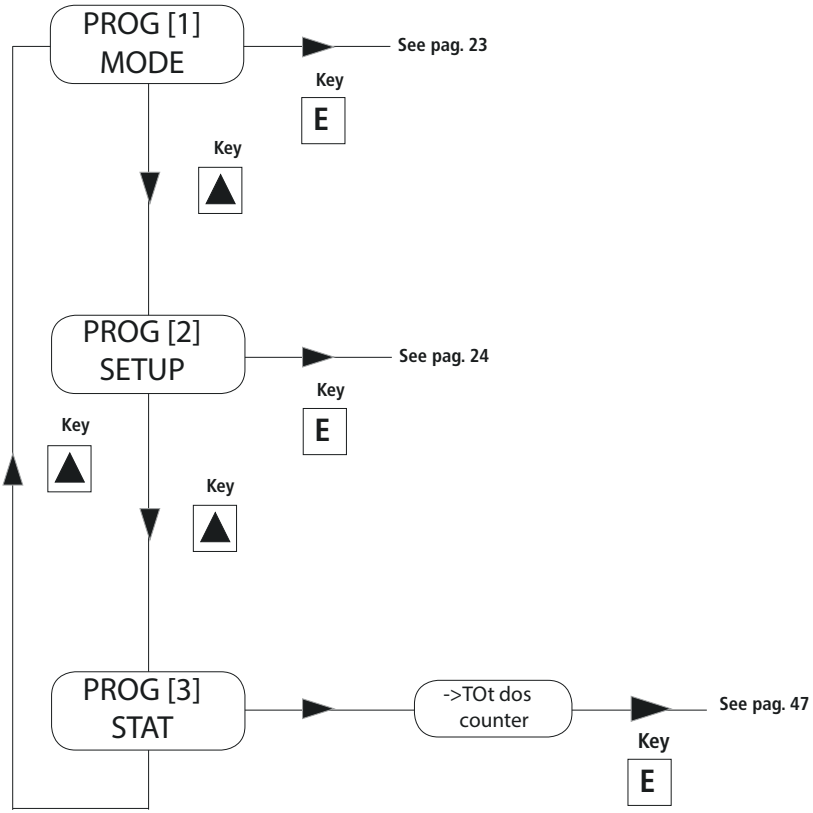
PROG [1]
MODE
See pag. 23
Key
E
Key
PROG [2]
SETUP
See pag. 24
Key
E
Key
Key
PROG [3]
STAT
->TOt dos
counter
See pag. 47
Key
E

16. Setup

Apart of choosen working mode, the pump must be prepared to operate by setting the main parameters into "SETUP" menu. To enter into this menu please follow the "Quick Guide - Main menu".

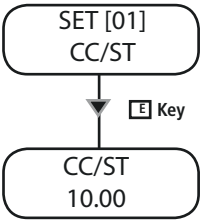

16.1 CC per Stroke.

Enter here the cc/stroke value obtained during "Test" mode (calibration).

Use **"UP"** key to increase of one unit the blinking digit "_".

Press **"RIGHT"** key to skip on next digit.

Press **"E"** key to save data and "**ESC**" exit to main menu.
Otherwise press **"ESC"** to discard data and exit to main menu.

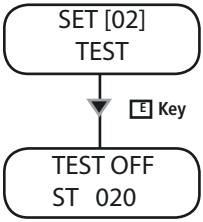

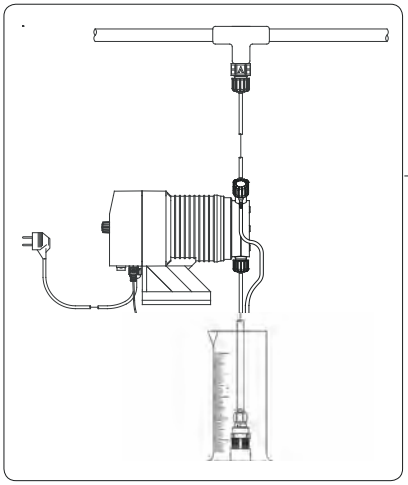

16.2 Calibration.

This procedure defines the cc quantity (cubical centimeters) that the pump feed every single injection. To determine this value the pump must be calibrated.

1) Install the pump on plant and insert the suction hose (with its level probe / foot filter) into a BEKER "test-tube".
If pump's model is self-priming put the venting hose into the "test-tube" too.

2) Power up the pump and turn the flow's knob to required position.

3) Fill up the "test-tube" with the chemical until to reach a known value.

4) From setup menu choose "TEST", and insert 20". This value is the strokes that the pump will produce during the procedure.

6) Press **"E"**. The pump will begin to produce the 20 strokes and to suck the chemical from the "test-tube".

TEST ON
ST 020

7) At the end of 20 strokes the pump will stop. Read the value of chemical left into "test-tube".

8) Substract the initial value to the left value.

9) Divide the result with the ST value (20).

10) Type this value into "CC/ST" (Set [01]) as previously described.

11) If obtained result is too small or too big, please, try to change strokes value (20).

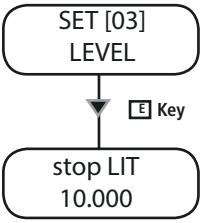

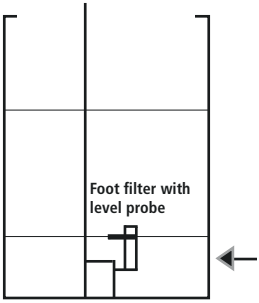

Customizable Reserver (liters / gallons)

16.3 Pre Level Alarm (Reserve).

This function defines a pre-alarm status to inform user that the dosing product is near to end. Reserve value to be set, must be calculated on product quantity left between foot filter and pump's suction level.

- Use **"UP"** key to increase the blinking "_" digit.
-Press **"RIGHT"** key to skip on next digit.
-Press **"E"** key to save data and "ESC" exit to main menu.

Otherwise press **"ESC"** to discard data and exit to main menu.

During the alarm the pump continues to dose but it'll show the following picture:

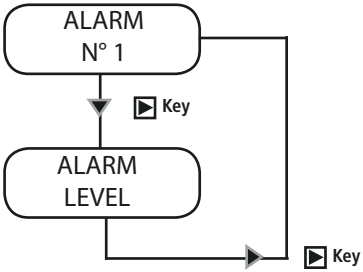

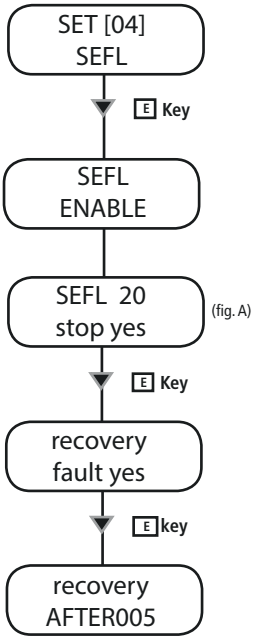

16.4 Flow Sensor (SEFL).

This function enables an external alarm and, eventually, stops the dosage if the pump does not receive a "confirmation signal" from the "SEFL". ("SEFL" accessories is optional).

- Use **"UP"** key to increase the blinking "_" digit and set the number of failing strokes before to stop or not the pump. It is possible to set a number from 1 to 99. Setting 00, the SEFL will be disabled (DIS).

-Press **"RIGHT"** key to skip on next digit.

-Press again **"RIGHT"** key to choose the working procedure.

-Press **"UP"** key to choose if pump must be stopped after a numbers of pulses (YES) or continue to dose (NO).

- Press **"E"** key to setup fault recovery (recovery fault) options. Setting **"YES"** as selected option if the flow sensor will have unreliable strokes it will recover them while flow sensor is still working in synching with it. Set this function by choosing how many unreliable strokes will be needed to recover dosage. If entered value is lower than previous one (fig. A) then SEFL function will be disabled.

While into recovering mode, if there is not synchrony with SEFL, the unreliable strokes numbers will not decrease. The maximum unreliable strokes numbers is determined by the number of failing strokes previuously set. Passing over this value an alarm (ALARM SEFL) will be generated by the pump. Press **"UP"** to set Recovery fault on NO.

-Press **"E"** key to save data and **"ESC"** to exit to main menu. Otherwise press **"ESC"** to discard data and exit to main menu.

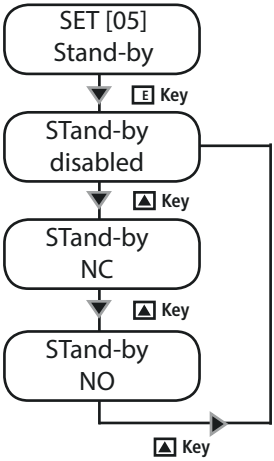

16.5 "Stand-By" signal.

This function allows the pump to dose only when an external signal is received from "Stand-by" input. This signal can be enabled as a N.O. contact (Normally Opened) , N.C. contact (Normally Closed) or disabled.

- Use "UP" key to change working mode for "Stand by" signal.

-Press **"E"** key to save data and **"ESC"** to exit to main menu. Otherwise press **"ESC"** to discard data and exit to main menu.

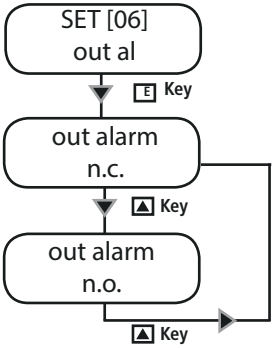

16.6 "Out Alarm" signal.

This function allows to manage the alarm output contact . The alarm can be set as "N.O." contact (Normally Open) or "N.C." contact (Normally Closed).

- Use "UP" key to change working mode for "Out Al" signal.

-Press **"E"** key to save data and exit to main menu. Otherwise press **"ESC"** to discard data and exit to main menu.

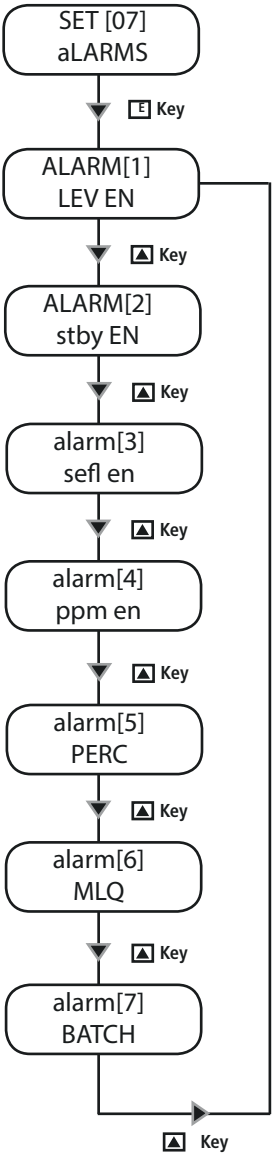

16.7 Alarms Management.

Use this function to enable/disable the relay output for level alarm (lev) and/ or standby (stby) and/or flow sensor (sefl) and/or ppm and/or percentage (PERC) and/or MLQ and/or Batch.

If alarm is activated for one or more events then the output relay will be enabled, the pump will show the alarm status and it'll stop or not the dosing activity.

If alarm is not activated for one or more events then the output relay will be disabled, the pump will show the alarm status and it'll stop or not the dosing activity.

- Use **"UP"** key to choose the alarm to set.

-Use **"RIGHT"** key to enable (EN) or disable (DI) the alarm.

-Press **"E"** key to save data and **"ESC"** to exit to main menu. Otherwise press **"ESC"** to discard data and exit to main menu.

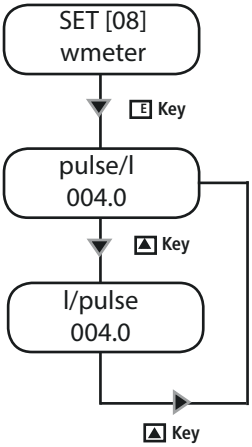

16.8 Water Meter Setup.

Use this function to setup the water meter information.

By entering the amount of pulses produced by the water meter the pump will optimize the working mode when programmed to work in ppm and update the stats menu.

- Use "UP" key to choose from "Pulse/L" (pulse/liter) or "L/Pulse" (liter/pulse).

Choose "Pulse/L" for a water meter that produces many pulses.

Choose "L/Pulse" for a water meter that produces few pulses.

Setting "000.0", the pump does not accept the signal and it is not possible to save the data.

- Use **"UP"** key to increase the blinking "_" digit. Enter number of pulses that pump must receive to stop or not the pump.

-Press **"RIGHT"** key for next digit / field.

-Press **"E"** key to save data and **"ESC"** to exit to main menu. Otherwise press **"ESC"** to discard data and exit to main menu.

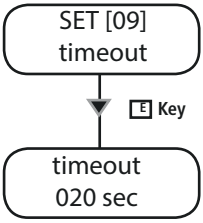

16.9 Pulses Timeout

(only for "Multiply" working mode and "PPM", "PERC" and "MLQ" working mode when the result is a multiplication).

When the pump receives a pulse from the water meter it starts the dosing activity through an amount of time (from the first pulse to the following one). At the beginning the pump doesn't know the time lapse between the first and the second pulse. So it'll dose the product in the fastest way. From the second pulse, the pump will dose the product correctly.

This function set the maximum time between a pulse and the following one. Once that this time is exceeded the pump will reinitialize the dosing activity as the first time that a pulse has been received.

Default value is 120 seconds.
To set "Timeout" function, between the minimum (1 sec.) and the maximum (999 sec.), proceed as follow:

- Use **"UP"** key to increase the blinking "_" digit. Enter number of pulses that pump must receive to stop or not the pump.

-Press **"RIGHT"** key for next digit / field.

-Press **"E"** key to save data and **"ESC"** to exit to main menu. Otherwise press **"ESC"** to discard data and exit to main menu.

Pulses Timeout does not take part in "Divide" working mode and in all working modes when the result is a division.

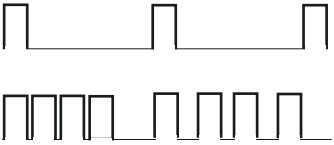

External Pulses

The first time that the pump receives a pulse it doesn't know the the time between this pulse and the following one. So the pump will run faster as possible. "Timeout" function forces the pump to work in this way, once a specified amount of time has been exceeded.

After second pulse the pump will know the time between a pulse and the following one.

So it'll dose optimizing the dosage through the time.

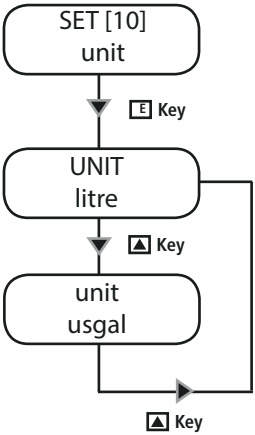

16.10 Unit Change.

This function allows to choose between liters or gallons measurement unit.

-Use **"UP"** key to switch between liter or gallons measurement unit.

-Press **"E"** key to save data and **"ESC"** to exit to main menu. Otherwise press **"ESC"** to discard data and exit to main menu.

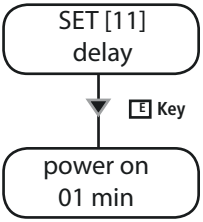

16.11 Startup Delay Setup.

When the pump is powered is it possible to have a delay time (from 0 to 10 minutes) before dosing activities.

-Use **"UP"** key to choose the alarm to set.

-Use **"RIGHT"** key for next digit.

-Press **"E"** key to save data and **"ESC"** to exit to main menu. Otherwise press **"ESC"** to discard data and exit to main menu.

Note: Press any key during delay time to skip it.

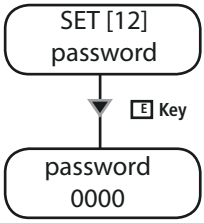

16.12 Password Setup.

"Setup" menu is password protected. Default value to enter into "setup" menu is "0000" (only numeric units). To change this password proceed as follows:

- Use **"UP"** key to change first digit.

-Press **"RIGHT"** key to move cursor over next digit.

-Press **"E"** key to save data and **"ESC"** to exit to main menu. Otherwise press **"ESC"** to discard data and exit to main menu.

Note: For lost password, please, follow the "Reset Password" procedure.

17. “Load default” and “Reset Password” procedure

17.1 “LOAD DEFAULT” procedure

This procedure deletes all programming data set. It reloads the default data of the pump.

Follow this instructions:

- unplug power supply;

- pressing both “UP” and “RIGHT” keys, plug in power supply.

For few seconds, the display shows LOAD DEFAULT before start up the pump.

17.2 “RESET PASSWORD” procedure

This procedure resets the password set and reloads the default password of the pump (“0000”).

Follow this instructions:

- unplug power supply;

- pressing both “UP” and “ESC” keys, plug in power supply.

For few seconds, the display shows RESET PASSWORD before start up the pump.

18. Working procedure setup

"MF" pump can work in different modes.

CONSTANT mode.

Pump doses at a constant rate set in "SPH" (strokes for hour), "SPM" (strokes for minute) or "LPH" (litres per hour) parameters set during program session.

When to use this mode ?
This mode is useful when there isn't an input signal to control the dosing activity. Pump doses requested product quantity in constantly.

Which parameters must be set ?
SPH (strokes per hour), SPM (strokes per minute) LPH (litres per hour)

DIVIDE mode.

External pulses from a water meter are divided by a value set during program session. The pump doses with a rate determined by this parameter.

When to use this mode ?
This mode is useful using an external signal from a pulse sender water meter that produces elevated quantities of pulses. Pump divides these pulses to allow a correct dosing activity.

Which parameters must be set ?
DIVIDE (division factor)

MULTIPLY mode.

External pulses are multiplied by a value set during program session. The pump doses with a rate determined by this parameter.

When to use this mode ?
This mode is useful using an external signal from a pulse sender water meter that produces low quantities of pulses. Pump multiplies these pulses to allow a correct dosing activity.

Which parameters must be set ?
MULTIPLY (multiply factor)
TIMEOUT

PPM mode.

Dosing rate is determined by pulses from a water meter, desired concentration in PPM, chemical product concentration (%) and quantity for each single stroke set during program session.

When to use this mode ?
This mode is useful using an external signal from a pulse sender water meter and it's necessary to specify only PPM (parts per million) and product concentration, leaving the pump to manage coming pulses.

Which parameters must be set ?
PPM (parts per million product quantity)
CONC (% of product's concentration)
Water Meter Pulses
CC/Stroke
TIMEOUT

PERC mode.

Dosing rate is determined by pulses from a water meter, percentage (%), chemical product concentration and quantity for each single stroke set during program session.

When to use this mode ?
This mode is useful using an external signal from a pulse sender water meter and it's neces--sary to specify only % , leaving the pump to manage coming pulses.

Which parameters must be set ?
% (percentual product to dose)
CONC (percentual of product concentration)
Water Meter Pulses
CC/STROKE
TIMEOUT

Water meter:
Use a water meter to reach its maximum pulsating capabilities.
Note: maximum frequency for this pump is 1Khz (1000 pulses per second).

MLQ mode.

Dosing rate is determined by pulses from a water meter on the base of set MLQ (mil liliters per quintal), chemical product concentration (%) and quantity for each single stroke set during program session.

When to use this mode ?
This mode is useful when with an external signal from a pulse sender (as a water meter), it is necessary to dose the product quantity set specifing the MLQ (milliliters per quintal) and leaving the pump to manage the coming pulses.

Which parameters must be set ?
MLQ (product quantity in milliliters per quintal)
CONC (% of product's concentration): set 100% if product is pure
Water Meter Pulses
CC/Stroke
TIMEOUT

BATCH mode.

Signal from an external contact starts the pump to dose product or to produce an amount of strokes set during program session.

When to use this mode ?
This function allows to begin dosing activities when pump receives an external signal.

Which parameters must be set ?
ST (strokes)
CC (product's quantity to dose)

VOLT mode.

Voltage from an external device drives the pump that doses proportionally using a minimum and maximum of strokes for minute set during program session.

When to use this mode ?
This mode is used with controllers provided of a proportional output in voltage.

Which parameters must be set ?
HIV (maximum tension)
LOV (minimum tension)
SPM (strokes per minute)

mA mode.

Current from an external device drives the pump that doses proportionally using a minimum and maximum of strokes for minute set during program session.

When to use this mode ?
This mode is used with controllers provided of a proportional output in current.

Which parameters must be set ?
HImA (maximum current)
LOmA (minimum current)
SPM (strokes per minute)

19. "CONSTANT" working mode

Pump doses at a constant rate set in"SPH" (strokes for hour), "SPM" (strokes for minute), "LPH" (litres per hour) parameters set during program session.

Which parameters must be set ?
SPH (strokes per hour), SPM (strokes per minute), LPH (litres per hour).

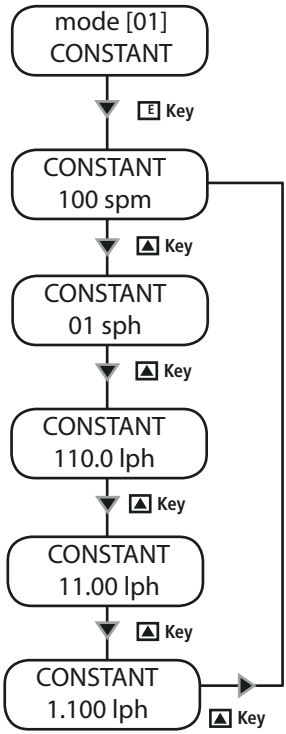

Choose "CONSTANT" working mode: "SPH" (strokes per hour), "SPM" (strokes per minute), "LPH" (litres per hour).

Use **"UP"** key to choose between these two modes. Use **"RIGHT"** key to change value. For next digit press again "RIGHT" key.

"LPH" value accuracy depends on cc/st value set into the Setup menu (SET [01] CC/ST).
LPH max value depends on the max frequency of the pump (refer to the pump's label). If an higher value is set, the pump will show an alarm message (ALARM STROKE).

Press **"E"** key to save data and "**ESC**" to exit to main menu. Otherwise press **"ESC"** to discard data and exit to main menu.

Note: last mode displayed before press the "E" key will be the active one.

20. "DIVIDE" working mode

External pulses are divided by a value set during program session. The pump doses with a frequency determined by this parameter.

Which parameters must be set ?
DIVIDE (divisor factor)

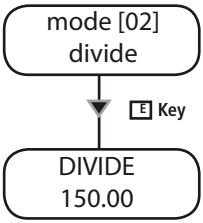

Use this mode if connected pulse sender water meter produces many pulses and pump must divide them for correct dosing activities. See formula below to verify this value.

Minimum value accepted is 001.00. Setting a lower value the pump does not save the data.

Use **"UP"** key to modify the value. Press **"RIGHT"** key to move on next digit.

Press **"E"** key to save data and "**ESC**" to exit to main menu. Otherwise press **"ESC"** to discard data and exit to main menu.

Use the following formula to find the divider to keep desired concentration.

$$\left(\frac{[imp/l] \times [cc]}{[ppm] \times [K]}\right) \times 1000 = N$$

N - divisor value to enter into the pump
[imp/l]- pulses/liter from pulse sender water meter
[cc] - single injection quantity of dosing pump
[ppm] - part per millions product quantity to dose (gr/m^3)
[K] - product dilution coefficient.

If obtained "N" is < 1 then install a pulse sender water meter that produces more pulses. Otherwise use the "MULTIPLY" mode and multiply for 1/N. It's also possible to fix the problem trying to decrease product dilution.

21. "MULTIPLY" working mode

External pulses are multiplied by a value set during program session. The pump doses with a frequency determined by this parameter.

Which parameters must be set ?
MULTIPLY (multiply factor)
TIMEOUT

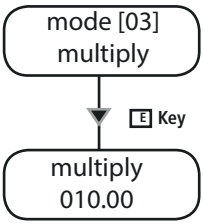

Use this mode if: connected pulse sender water meter produces few pulses and pump must multiply them for correct dosing activities. See formula below to verify this value.

Minimum value accepted is 001.00. Setting a lower value the pump does not save the data.

Use **"UP"** key to modify the value. Press **"RIGHT"** key to move on next digit.

Press **"E"** key to save data and "**ESC**" to exit to main menu. Otherwise press **"ESC"** to discard data and exit to main menu.

Use the following formula to find the divider to keep desired concentration.

$$\left(\frac{[ppm] \times [K]}{([imp/l] \times [cc]) \times 1000} \right) = N$$

N - multiplier value to enter into the pump
[imp/l]- pulses/liter from pulse sender water meter
[cc] - single injection product quantity of dosing pump
[ppm] - part per millions product quantity to dose (gr/m^3)
[K] - product dilution coefficient.

If obtained "N" is < 1 then install a pulse sender water meter that produces less pulses. Otherwise use the "DIVIDE" mode and divice for 1/N. It's also possible to fix the problem trying to decrease product dilution.

Note: before to use this mode please set the "TIMEOUT" parameter.

22. “PPM” working mode

Dosing rate is determined by pulses from a water meter, PPM, chemical product (%) concentration and quantity for each single stroke set during program session.

Which parameters must be set ?
PPM (parts per million product quantity)
CONC (% of product’s concentration)
TIMEOUT
WMETER (pulse sender water meter)
CC/ST (see related page)

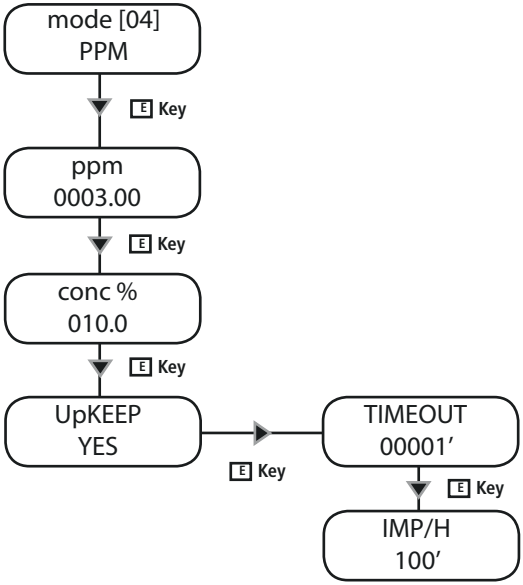

Use **“UP”** key to change selected unit (“_” blinking cursor) of PPM.

To move on next digit press **“RIGHT”** key.

To modify quantity of product concentration press **“E”** key.

Use **“UP”** key to change selected unit (“_” blinking cursor) of CONC%.

To move on next digit press **“RIGHT”** key.

Press **“E”** key to save data and “**ESC**” to exit to main menu. Otherwise press **“ESC”** to discard data and exit to main menu.

To change “TIMEOUT” option, pump activation without external pulses for a set time, choose “YES” from “UPKEEP” menu. Then set pulses/hour to dose at the end of set time.

Note: before to use this mode we suggest to set the “TIMEOUT” parameter. “TIMEOUT” take part when the result is a multiplication.

23. “PERC” working mode

Dosing rate is determined by pulses from a water meter, percentage (%), chemical product concentration and quantity for each single stroke set during program session.

Which parameters must be set ?
% (percentage of product quantity to dose)
CONC (% of product’s concentration): set 100% if product is pure
CC/STROKE (refer to CC/ST setup)
WMETER (water meter)
TIMEOUT

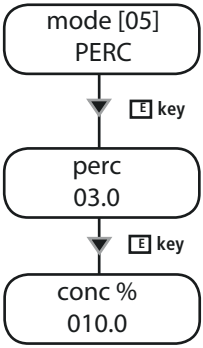

Selectionable from 0.1 to 100.0%

Use **“UP”** key to change selected unit (“_” blinking cursor) of PPM.

To move on next digit press **“RIGHT”** key.

To modify quantity of product concentration press **“E”** key.

Use **“UP”** key to change selected unit (“_” blinking cursor) of CONC%.

To move on next digit press **“RIGHT”** key.

Press **“E”** key to save data and “**ESC**” to exit to main menu. Otherwise press **“ESC”** to discard data and exit to main menu.

Note: before to use this mode we suggest to set the “TIMEOUT” parameter.
“TIMEOUT” take part when the result is a multiplication.

24. “MLQ” working mode

Dosing rate is determined by pulses from a water meter on the base of set MLQ (milli liters per quintal), chemical product concentration (%) and quantity for each single stroke set during program session.

Which parameters must be set ?
MLQ (product quantity in milliliters per quintal)
CONC (% of product’s concentration): set 100% if product is pure
CC/STROKE (refer to CC/ST setup)
WMETER (water meter)
TIMEOUT

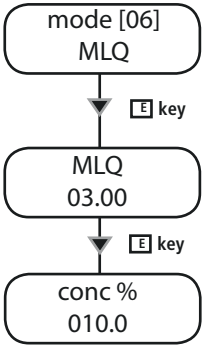

Use **“UP”** key to change selected unit (”_” blinking cursor) of MLQ.

To move on next digit press **“RIGHT”** key.

To modify quantity of product concentration press **“E”** key.

Use **“UP”** key to change selected unit (”_” blinking cursor) of CONC%.

To move on next digit press **“RIGHT”** key.

Press **“E”** key to save data and **“ESC”** to exit to main menu. Otherwise press **“ESC”** to discard data and exit to main menu.

Note: before to use this mode we suggest to set the “TIMEOUT” parameter.
“TIMEOUT” take part when the result is a multiplication.

25. "BATCH" working mode

Signal from an external contact starts the pump to dose the needed quantity set during program session or for the set number of strokes.

When to use this mode ?
This function allows to begin dosing activities when pump receives an external signal or to dose in WORK-PAUSE mode.

Which parameters must be set ?
MODE (EXTERNAL - MANUAL - INTERNAL)
ST (strokes)
CC (product's quantity to dose only if programmed to feed a set amount of chemical)
CC/STROKE (see "setup CC/ST")
CONTACT (OPEN or CLOSED)

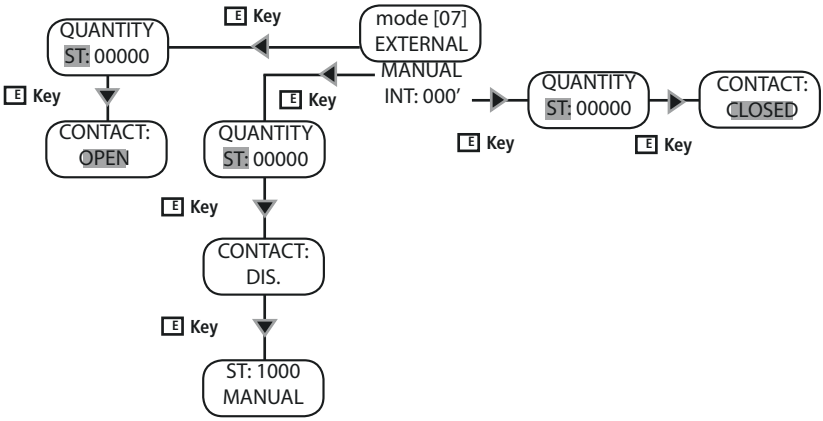

Choose working mode:

EXTERNAL: Pump doses within an amount of time if an external signal is received. External contact can be set as OPEN (normally open) or CLOSED. (normally closed). Press **"E"** from main mode, choose to dose in ST or CC using **"UP"** key. Set quantity dose and press **"E"** to continue. Define contact type using **"UP"** key. Press "E" to end procedure.

MANUAL: Pomp doses at the end of procedure. Press "E" from main mode, choose to dose in ST or CC using "UP" key. Set quantity to dose. Press "E" to continue, review contact status and press "E". Pump will begin to dose immediately showing quantity left.

INTERNAL: This is a "WORK-PAUSE" mode. Dosing will start for set CC or ST quantity and will stop for set time. Press **"E"** from main mode, choose to dose in ST or CC using **"UP"** key. Set quantity dose and press **"E"** to continue. Define contact type (OPEN or CLOSED) using **"UP"** key. Press "E" to end procedure.

NOTE: Pump must be calibrated ("TEST" function) in order to work properly into this mode. It's not possible to program the pump for both modes. Last entry overwrite previous ones.

26. "VOLT" working mode

Voltage from an external device drives the pump that doses proportionally using a minimum and maximum of strokes for minute set during program session.

Which parameters must be set ?
HIV (maximum tension)
LOV (minimum tension)
SPM (strokes per minute)

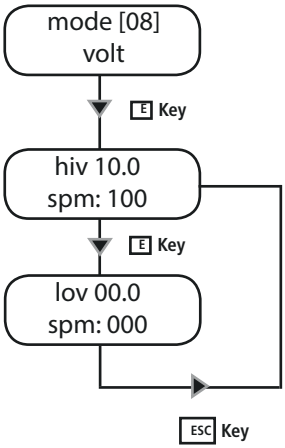

To work in this mode is necessary to specify the "HIV" (maximum working tension), "LOV" (minimum working tension) and "SPM" (strokes per minute) values that pump will produce between the parameters.

To setup this values enter into "VOLT" mode. The cursor will blink on first digit ("HIV" field). Insert maximum tension value that will be supplied to the pump (**"UP"** key). To move on next digit press **"RIGHT"** key.

The cursor will blink on "SPM" field. Insert strokes per minute that pump will produce near "HIV" value (**"UP"** key). To move on next digit press **"RIGHT"** key.

Press **"E"** key to move on "LOV".

The cursor will blink on first digit ("LOV" field). Insert minimum tension value that will be supplied to the pump (**"UP"** key). To move on next digit press **"RIGHT"** key.

The cursor will blink on "SPM" field. Insert strokes per minute that pump will produce near "LOV" value (**"UP"** key). To move on next digit press **"RIGHT"** key.

Press **"E"** key to save data and "**ESC**" to exit to main menu. Otherwise press **"ESC"** to discard data and exit to main menu.

Attention: if a wrong data is set (for example, it has been set the same value for HIV and LOV) an error message (WRONG ENTRY) will appear.

27. "mA" working mode

Current from an external device drives the pump that doses proportionally using a minimum and maximum of strokes for minute set during program session.

Which parameters must be set ?
HImA (maximum current)
LOmA (minimum current)
SPM (strokes per minute)

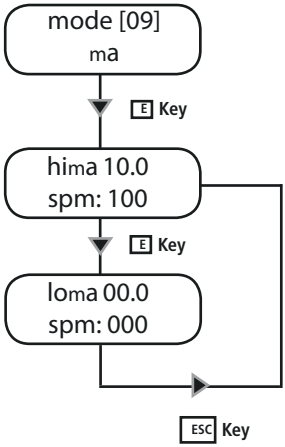

To work in this mode is necessary to specify the "HImA" (maximum working current), "LOmA" (minimum working current) and "SPM" (strokes per minute) values that pump will produce between the parameters.

To setup this values enter into "mA" mode. The cursor will blink on first digit ("HImA" field). Insert maximum current value that will be supplied to the pump (**"UP"** key). To move on next digit press **"RIGHT"** key.

The cursor will blink on "SPM" field. Insert strokes per minute that pump will produce near "HImA" value (**"UP"** key). To move on next digit press **"RIGHT"** key.

Press **"E"** key to move on "LOmA".

The cursor will blink on first digit ("LOmA" field). Insert minimum current value that will be supplied to the pump (**"UP"** key). To move on next digit press **"RIGHT"** key.

The cursor will blink on "SPM" field. Insert strokes per minute that pump will produce near "LOmA" value (**"UP"** key). To move on next digit press **"RIGHT"** key.

Press **"E"** key to save data and "**ESC**" to exit to main menu. Otherwise press **"ESC"** to discard data and exit to main menu.

Attention: if a wrong data is set (for example, it has been set the same value for HIV and LOV) an error message (WRONG ENTRY) will appear.

28. STATISTICS management

To see dosing statistics choose "STAT" from main menu. See Quick Guide - Main Menu.

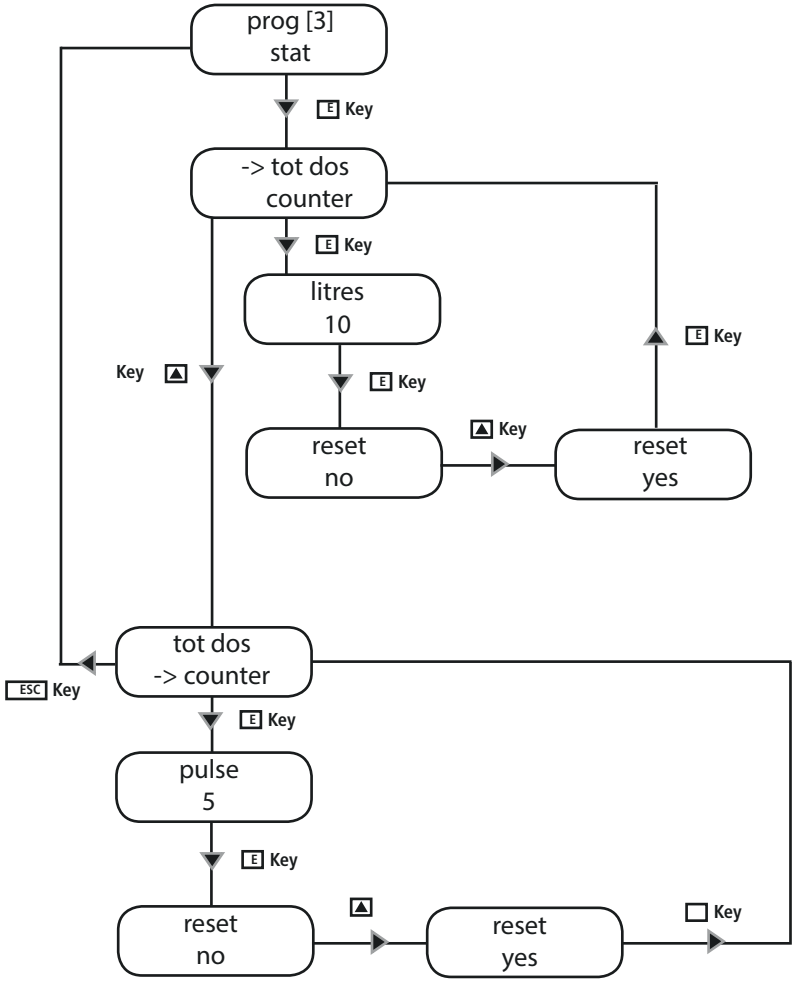

"TOT DOS" means total dosed product since pump last reset.
"COUNTER" means strokes numbers since pump last reset.

29. Troubleshooting

PROBLEM	CAUSE	HOW MANAGE
Pump does not turn on	• There is not power supply. • Protection fuse is broken • Main board failure	• Connect pump to main supply • Replace fuse, see **Fuse replacement procedure**. • Replace cirucit, see **Main board replacement procedure**.
Pump is not dosing but solenoid is operating	• Foot filter is obstructed • Unprimed pump (suction hose is empty) • Air bubbles in the hydraulic circuit • Product to dose is generating gas	• Clean foot filter • Prime the pump, see **How to prime pump head** • Check valves, hoses and fittings and let air flow away • Turn on venting valve and let air flow away. Use a self-venting pump head model.
Pump is not dosing and solenoid isn't operating or slightly operating.	• Crystals block the balls inside the valves • Injection valve obstructed	• Clean valves and try to dose 2-3 liters of normal water • Change valves
Display shows ERROR MEM	Error in data storage	Restore default value, see **LOAD DEFAULT procedure**.
Display shows ERROR DATA	Error in data setting	Check the value set. If correct and the error still persist, the pump could be undersized
Display shows WRONG PASSWORD	Error in password enter	Restore a new password, see **RESET PASSWORD procedure**
Display shows INPUT OPEN	In mA and VOLT working mode only: no signal input	Check INPUT signal

30. Fuse and main board replacement

Fuse or main board replacement is allowed to qualified personnel only. Before to operate disconnect the pump from main power and all hydraulic connections.

For fuse replacement is necessary to use a 3x16 and 3x15 screwdriver and a new fuse (same model of old one).

For main board replacement is necessary to use a 3x16 and 3x15 screwdriver and a new main board (same model of old one).

Fuse replacement procedure:

- Turn pump's injection knob on 0%.

- Remove 6 screws from pump's back.

- Pull pump's back cover until it's completed separated from pump's front. Be careful of the knob's spring.

- Locate the blown fuse and replace it.

- Reassemble the pump. Be careful to put back the knob's spring.

- Reinsert screws.

Main board replacement procedure:

- Turn pump's injection knob on 0%.

- Remove 6 screws from pump's back.

- Pull pump's back cover until it's completed separated from pump's front. Be careful of the knob's spring.

- Remove board's screws.

- Completely disconnect wires from main board and replace it. Reinsert screws.

- Reconnect wires to the main board (see enclosed picture).

- Reassemble the pump. Be careful to put back the knob's spring.

- Reinsert screws.

31. Main Board

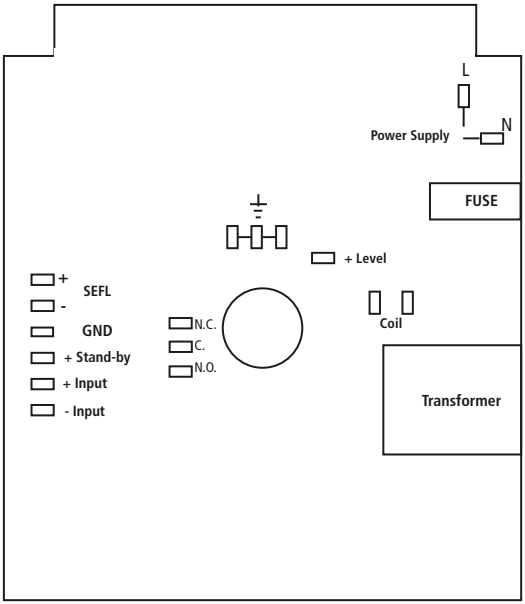

Maintenance schedule

In order to ensure the requirements of potable drinking water treated and the maintenance of the improvements as declared by the manufacturer, this equipment must be checked at least once a month.

OPERATOR PROTECTION
Use safety equipment according to the company regulations.
Use this safety equipment within the work area during installation, service and when handling chemicals:
- **protective mask**
- **protective gloves**
- **safety goggles**
- **ear plugs or hear muffs**
- **further security device, if necessary.**

POWER SUPPLY DISCONNECTION
Always disconnect power to the motor before you perform any installation or maintenance tasks. Failure to disconnect power will result in serious physical injury.

Installation and maintenance tasks should be carried out by AUTHORIZED AND QUALIFIED PERSONNEL only in accordance with local regulations.

Use original spare parts.

Maintenance inspection

Shutdown the dosing pump before any maintenance operation **Shutdown procedure.**

A maintenance schedule includes these types of inspections:
- Routine maintenance and inspections
- Three-month inspections
- Annual inspections

Shorten the inspection intervals appropriately if the pumped chemical is abrasive or corrosive.

Routine maitenance and inspections
Perform these tasks whenever you perform routine maintenance:
- Inspect the seal. Ensure that there are no leaks from the mechanical seal.
- Check electrical wiring
- Check for unusual noise and vibration (noise allowed 71 dbA; ± 5 dB).
- Check the pump and piping for leaks.
- Check for corrosion on parts of the pump and / or on hoses.

Three-month inspections
Perform these tasks every three months:
- Check that the tightenings.
- Check the mechanical seal if the pump has been left idle.

Annual inspections
Perform these inspections one time each year:
- Check the pump capacity (as per nameplate).
- Check the pump pressure (as per nameplate).
- Check the pump power (as per nameplate).

f the pump performance does not satisfy your process requirements, and the process requirements have not changed, then perform these steps:
1. Disassemble the pump.
2. Inspect it.
3. Replace worn parts.

Shutdown procedure

This procedure SHOULD BE CARRIED OUT BY AUTHORIZED AND QUALIFIED PERSONNEL

OPERATOR PROTECTION
Use safety equipment according to the company regulations.
Use this safety equipment within the work area during installation, service and when handling chemicals:
- **protective mask**
- **protective gloves**
- **safety goggles**
- **ear plugs or hear muffs**
- **further security device, if necessary.**

Shutdown the dosing pump **before any maintenance operation** or **before long downtimes**. Disconnect power and ensure it cannot be restarted.

Depressurize the system. The liquid may leak splashing.

Drain the chemical from pump head.
Release the pressure and disconnect the disharge pipe from the discharge valve.
Rinse the pump head and clean all valves.

Features

POWER SUPPLY	FREQ.	FUSE
230 VAC (180-270 VAC)	50/60 Hz	1,25 A
115 VAC (90-135 VAC)	50/60 Hz	1,6 A
24 VAC (20-32 VAC)	50/60 Hz	6,3 A
12 VDC (10-16 VDC)		5 A
24 VDC (20-32 VDC)		500 mA

injections/minute.....0-120 (except for 0260:130 injections/minute)
Suction hose max height .....1,5 m

Environment temperature .....0-45°C (32-113°F)
Chemical temperature: .....0-50°C (32-122°F)
Transportation and storage temperature: ...-10-50°C (14-122°F)

Altitude.....2000 m
Installation Class:.....II

Audible noise:.....AMS/AMSA: 57.4 db(A);
.....AMS/AMSA silenced: 54.4 db(A);
.....AMS/AMSA ultrasilenced: 53.4 db(A);
.....AMS AC: 78.3 db(A)

Protection degree:.....AMS / AMSA / AMS AC: IP 65

Only compressed air AMS AC MF::
Compressed air consumption 30 l/h (suction air)
Suction air pressure 7 bar
Compressed air metering pumps work only with compressed air without lubrificant and/or condensed water. Air supply pressure range must be from 6 bar to 10 bar.

Materials AMS MF

✓ : standard
✗: opzione disponibile

	PVDF	PP	PPV0	PMMA	PVC	PE	CE	GLASS	PTFE	SS	FKM B	EPDM	WAX	SI
BOX		✓	✗											
PUMP HEAD	✓			✗										
DIAPHRAGM									✓					
BALLS							✓	✗	✗	✗				
SUCTION HOSE	✗				✓	✗								
DELIVERY HOSE	✓				✗	✗								
Venting hose	✗				✓	✗								
O RING									✗		✗	✗	✗	✗
LEVEL PROBE/ FOOT FILTER	✓													
LEVEL RPOBE CABLE						✓								

Materials
AMS MF LPV

	PVDF	PP	PPV0	PMMA	PVC	PE	CE	GLASS	PTFE	SS	FKM B	EPDM	WAX	SI
BOX		✓	✗											
PUMP HEAD				✓										
DIAPHRAGM									✓					
BALLS										✓				
SUCTION HOSE					✓									
DELIVERY HOSE						✓								
PRIMING HOSE					✓									
O RING											✓	✗	✗	

INFORMATION														
Models AMS MF AMS MF LPV [1]	**Flow**				**cc per stroke[2]**		**stroke/ min**	**Pressure**		**Ampere peak (A)**		**PVDF Delivery hose**	**Suction Hose**	**Pump head**
	min cc/h	max l/h	Min GPH	Max GPH	**min**	**max**		**bar**	**PSI**	230 VAC	115 VAC			
2505	0,21	5	0,039	1.32	0,21	0.70	120	25	362	2.5	2.5	4 x 6	4x 6	L
1510	0,42	10	0,079	2.64	0,42	1.4	120	15	217	2.5	2.5	4 x 6	4 x 6	M
1015	0.62	15	0,118	3.96	0.62	2.08	120	10	217	2.5	2.5	6 x 8	6 x 8	M
0720	0,83	20	0,158	5.28	0,83	2.8	120	7	101	2.5	2.5	6 x 8	6 x 8	N
0340	1,67	40	0,317	10.56	1,67	5.6	120	3	43	2.5	2.5	8 x 10	8 x 12	S
0260	2,31	60	0,61	15.85	2,31	7,7	130	2	29	2.5	2.5	8 x 10	8 x 12	T
Models AMSA MF	**Flow**				**cc per stroke[2]**		**stroke/ min**	**Pressure**		**Ampere peak (A)**		**PVDF Delivery hose**	**Suction Hose**	**Pump head**
	min cc/h	max l/h	Min GPH	Max GPH	**min**	**max**		**bar**	**PSI**	230 VAC	115 VAC			
253.2	0.13	3.2	0.00003	0.85	0.13	0.44	120	25	362	2.5	2.5	4 x 6	4x 8	LA
1506	0.25	6	0.00007	1.59	0.25	0.83	120	15	217	2.5	2.5	4 x 6	4 x 8	MA
1010	0.48	10	0.00012	2.64	0.48	1.39	120	10	217	2.5	2.5	6 x 8	6 x 8	MA
0713	0.54	13	0.00014	3.43	0.54	1.80	120	7	101	2.5	2.5	6 x 8	6 x 8	NA

INFORMATION											
Models AMS AC MF	**Flow**				**cc per stroke**		**Pressure**		**PVDF Delivery hose**	**Suction Hose**	**Pump head**
	min cc/h	max l/h	Min GPH	Max GPH	**min**	**max**	**bar**	**PSI**			
1050	2,08	50	0,55	13,21	2,08	6,94	10	145	8 x 10	8 x 12	N
05140	5,83	140	1,54	36,97	5,83	19,44	5	72,5	13 x 16	12 x 18	T
00220	9,17	220	2,42	58,1	9,17	30,56	0	0	13 x 16	12 x 18	T

[1] Flow rates indicated refer to a measure with water. flow may change according to viscosity.
[2] cc per stroke: referred to cc/stroke with stroke length knob on 100%.

2505: l/h 05 bar 25
Pump head mod. L

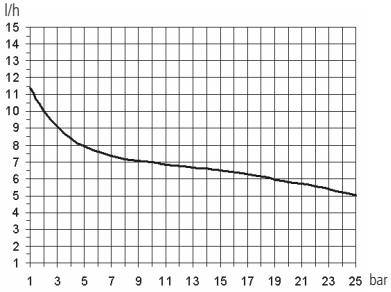

1510: l/h 10 bar 15
Pump head mod. M

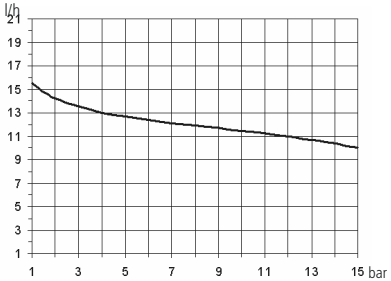

1015: l/h 15 bar 10
Pump head mod. M

0720: l/h 20 bar 7
Pump head mod. N

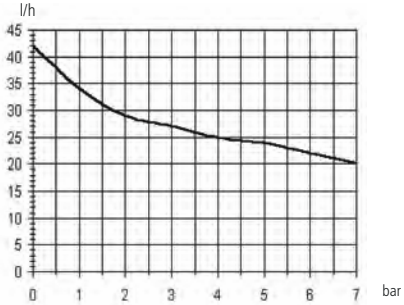

0340: l/h 40 bar 3
Pump head mod. S

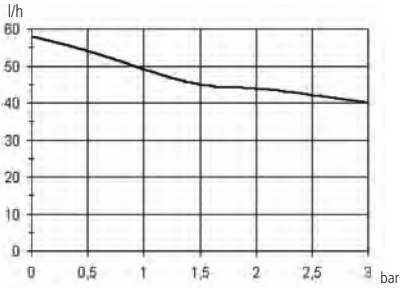

0260: l/h 60 bar 2
Pump head mod. T

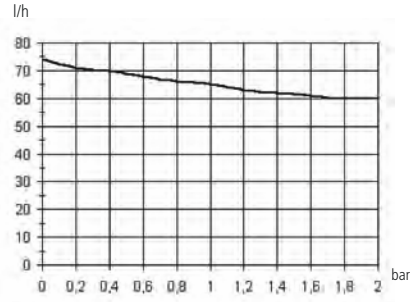

Flow rate indicated is for H_2O at 20°C at the rated pressure. Dosing accuracy ± 2% at constant pressure ± 0,5 bar.

C Appendix. Delivery Curves for self-purge pump head

253,2: l/h 25 bar 3,2
Pump head mod. LA

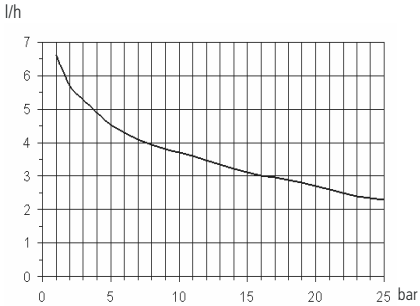

1506: l/h 6 bar 15
Pump head mod. MA

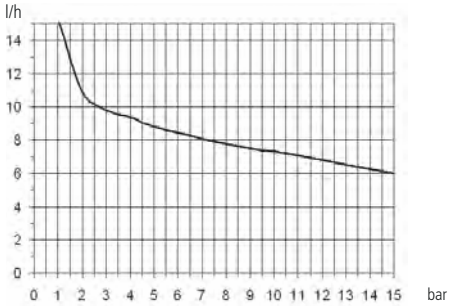

0713: l/h 13 bar 7
Pump head mod. NA

1010: l/h 10 bar 10
Pump head mod. MA

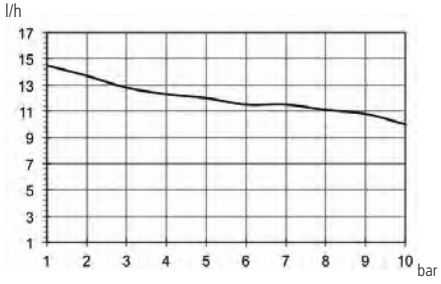

0330: l/h 30 bar 3
Pump head mod. SA

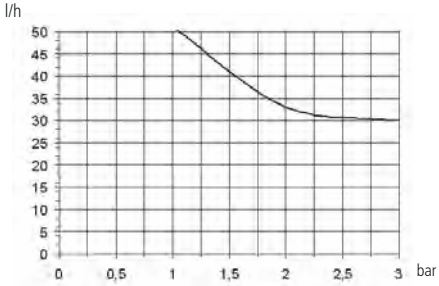

0238,5: l/h 38,5 bar 2
Pump head mod. TA

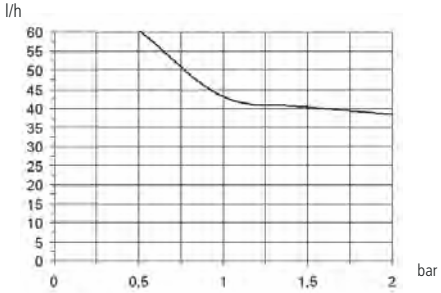

Flow rate indicated is for H_2O at 20°C at the rated pressure. Dosing accuracy ± 2% at constant pressure ± 0,5 bar.

C Appendix. Delivery Curves for compressed air models

05140: l/h 140 bar 5
Pump head mod. T

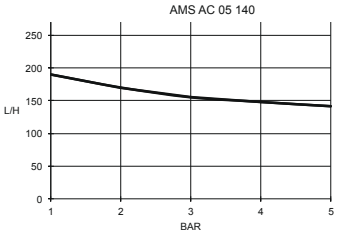

00220: l/h 220 bar 0
Pump head mod. T

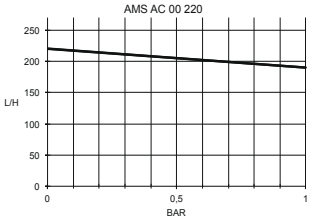

1050: l/h 50 bar 10
Pump head mod. N

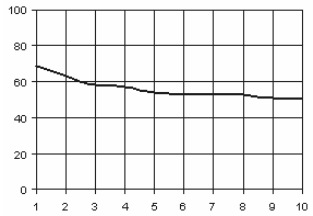

Pump head "N" - "P"

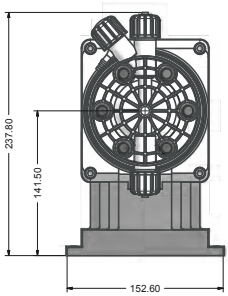

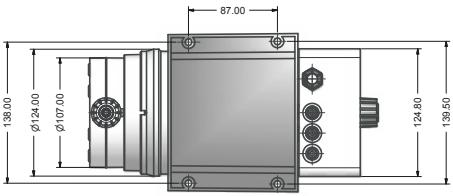

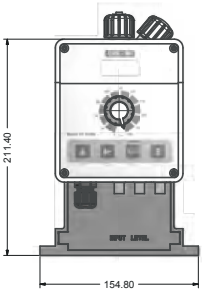

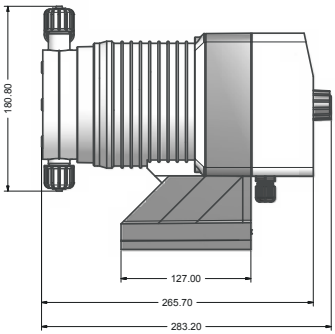

Pump head "S" - "T"

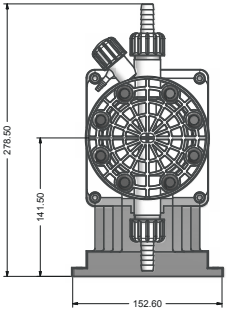

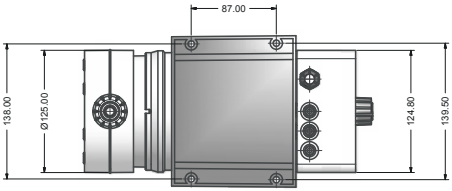

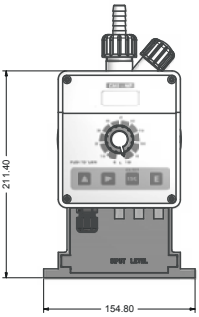

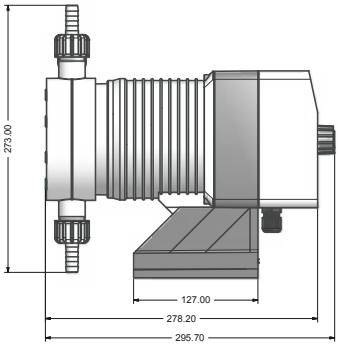

E Appendix. Chemical Compatibility Table

Solenoid driven metering pumps are widely used to dose chemical fluids and it is important that the most suitable material in contact with fluid is selected for each application. This compatibility table serves as a useful help in this respect. All the informations in this list are verified periodically and believed to be correct on the date of issuance. All the informations in this list are based on manufacturer's data and its own experience but since the resistance of any material depends by several factors this list is supplied only as an initial guide, in no way manufacturer makes warranties of any matter respect to the informations provided in this list.

Product	Formula	Ceram.	PVDF	PP	PVC	SS 316	PMMA	Hastel.	PTFE	FPM	EPDM	NBR	PE
Acetic Acid, Max 75%	CH3COOH	2	1	1	1	1	3	1	1	3	1	3	1
Hydrochloric Acid, Concentrate	HCl	1	1	1	1	3	1	1	1	1	3	3	1
Hydrofluoric Acid 40%	H2F2	3	1	3	2	3	3	2	1	1	3	3	1
Phosphoric Acid, 50%	H3PO4	1	1	1	1	2	1	1	1	1	1	3	1
Nitric Acid, 65%	HNO3	1	1	2	3	2	3	1	1	1	3	3	2
Sulphuric Acid, 85%	H2SO4	1	1	1	1	2	3	1	1	1	3	3	1
Sulphuric Acid, 98.5%	H2SO4	1	1	3	3	3	3	1	1	1	3	3	3
Amines	R-NH2	1	2	1	3	1	-	1	1	3	3	1	1
Sodium Bisulphite	NaHSO3	1	1	1	1	2	1	1	1	1	1	1	1
Sodium Carbonate (Soda)	Na2CO3	2	1	1	1	1	1	1	1	2	1	1	1
Ferric Chloride	FeCl3	1	1	1	1	3	1	1	1	1	1	1	1
Calcium Hydroxide (Slaked Lime)	Ca(OH)2	1	1	1	1	1	1	1	1	1	1	1	1
Sodium Hydroxide (Caustic Soda)	NaOH	2	3	1	1	1	1	1	1	2	1	2	1
Calcium Hypochlor.(Chlor.ted Lime)[1]	Ca(OCl)2	1	1	1	1	3	1	1	1	1	1	3	1
Sodium Hypochlorite, 12.5%	NaOCl + NaCl	1	1	2	1	3	1	1	1	1	1	2	3
Potassium Permanganate, 10%	KMnO4	1	1	1	1	1	1	1	1	1	1	3	1
Hydrogen Peroxide, 30% (Perydrol)	H2O2	1	1	1	1	1	3	1	1	1	3	3	1
Aluminium Sulphate	Al2(SO4)3	1	1	1	1	1	1	1	1	1	1	1	1
Copper-II-Sulphate (Roman Vitriol)	CuSO4	1	1	1	1	1	1	1	1	1	1	1	1

[1] Calcium Hypochlor.(Chlor.ted Lime): WQA test was based on 1% Calcium Hypochlorite solution.

Resistance rating

Resistant	1
Fairly resistant	2
Not resistant	3

F Appendix. Hoses resistance table

Hose features are very important for a reliable dosage. Every pump's model is made to work in the best way using selected hoses according to pump's capacity / model. Information reported here are intended for standard use only. For extended information ask to hose's manufacturer.

Suction / Delivery Hose			
4x6 mm PVC (transparent)	4x8 mm PE (opaque)	6x8 mm PE (opaque)	8x12 mm PVC (transparent)

Delivery Hose	Working Pressure				Breaking Pressure			
4x6 mm PE 230 (opaque)	20°C 12 bar	30°C 10.5 bar	40°C 8.5 bar	50°C 6.2 bar	20°C 36 bar	30°C 31.5 bar	40°C 25.5 bar	50°C 18.5 bar
4x8 mm PE 230 (opaque)	20°C 19 bar	30°C 15.7 bar	40°C 12 bar	50°C 7.5 bar	20°C 57 bar	30°C 47 bar	40°C 36 bar	50°C 22.5 bar
6x8 mm PE 230 (opaque)	20°C 8.6 bar	30°C 6.8 bar	40°C 4.8 bar	50°C 2.3 bar	20°C 26 bar	30°C 20.5 bar	40°C 14.5 bar	50°C 7 bar
8x12 mm PE 230 (opaque)	20°C 12 bar	30°C 10.5 bar	40°C 8.5 bar	50°C 6.2 bar	20°C 36 bar	30°C 31.5 bar	40°C 25.5 bar	50°C 18.5 bar

4x6 mm PVDF Flex 2800 (opaque)	20°C 40 bar	30°C 34 bar	40°C 30 bar	50°C 27 bar	60°C 24.8 bar	80°C 20 bar	90°C 10 bar
6x8 mm PVDF Flex 2800 (opaque)	20°C 29 bar	30°C 25.5 bar	40°C 22 bar	50°C 20 bar	60°C 18 bar	80°C 14.5 bar	90°C 7.3 bar
8X10 mm PVDF Flex 2800 (opaque)	20°C 18 bar	30°C 15.5 bar	40°C 13.5 bar	50°C 12.5 bar	60°C 11.2 bar	80°C 9 bar	90°C 4.5 bar

¼ PE 230 (opaque)	20°C 17.6 bar
⅜ PE 230 (opaque)	20°C 10.6 bar
½ PE 230 (opaque)	20°C 10.6 bar

AMS MF

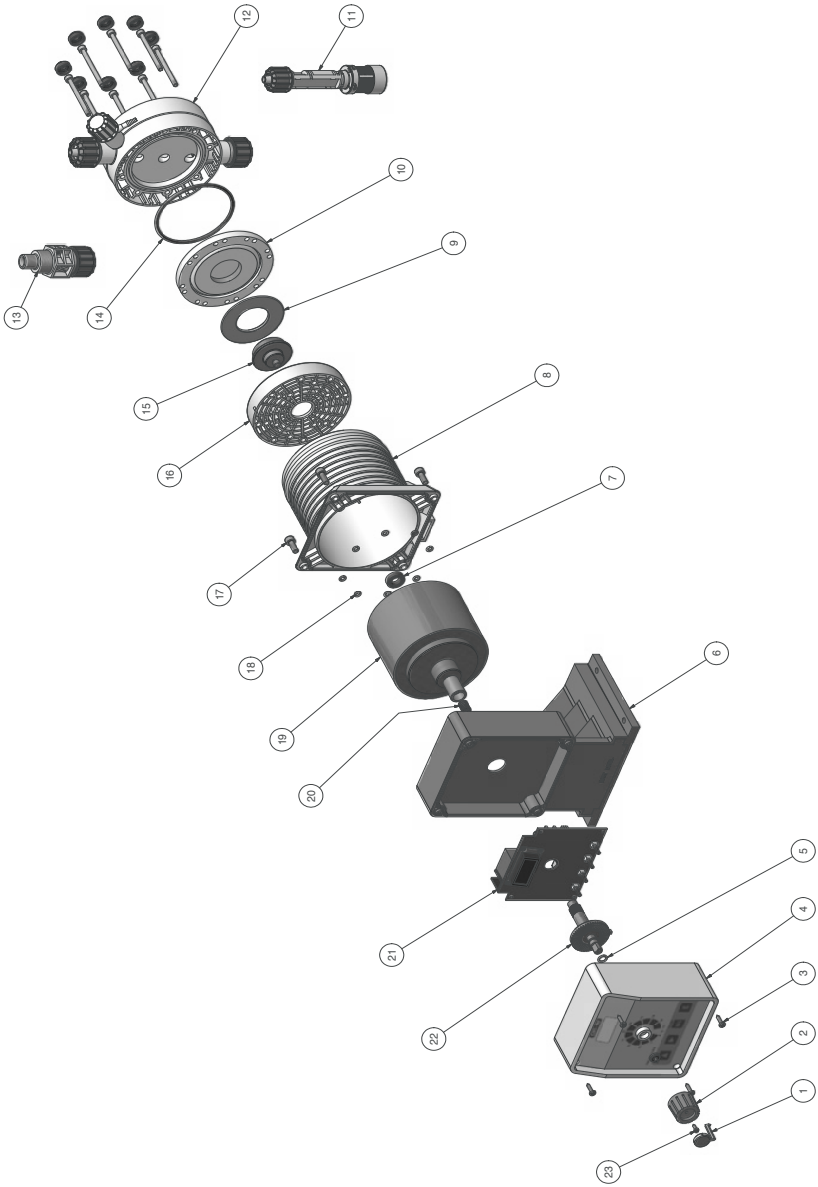

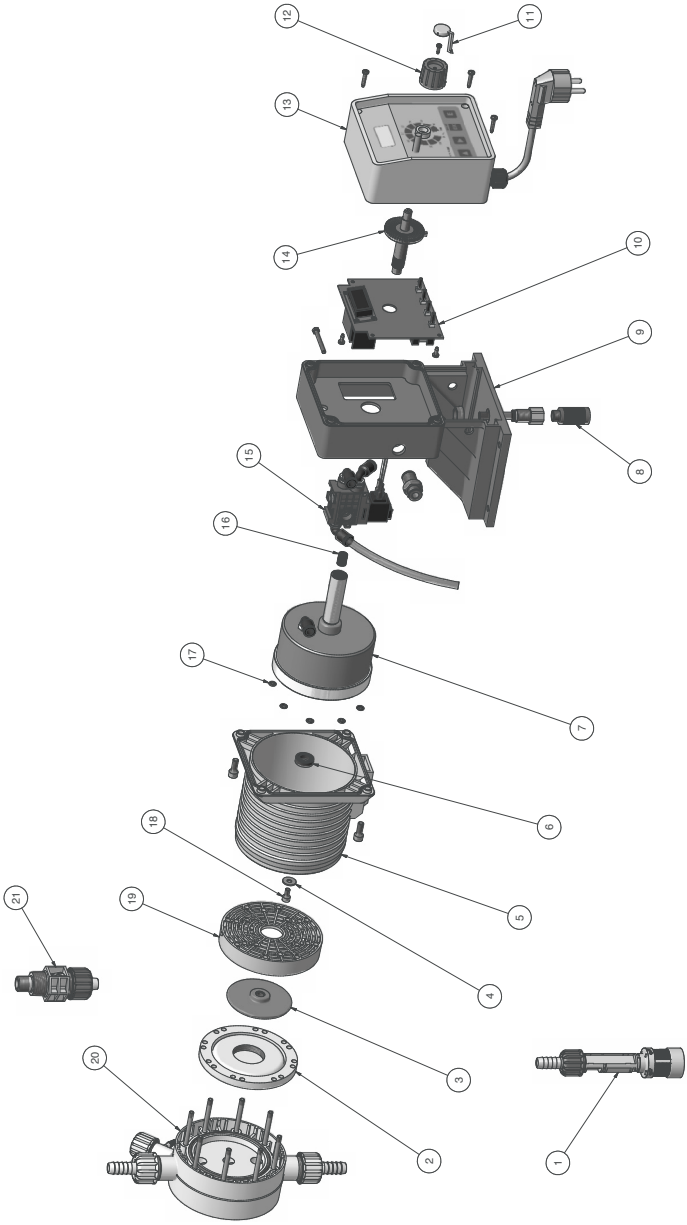
12
11
13
14
10
9
8
15
16
17
7
6
18
5
21
19
4
3
20
2
1

Install SEFL flow sensor at a minimum distance of 50 cm from the pump to avoid interference with solenoid.

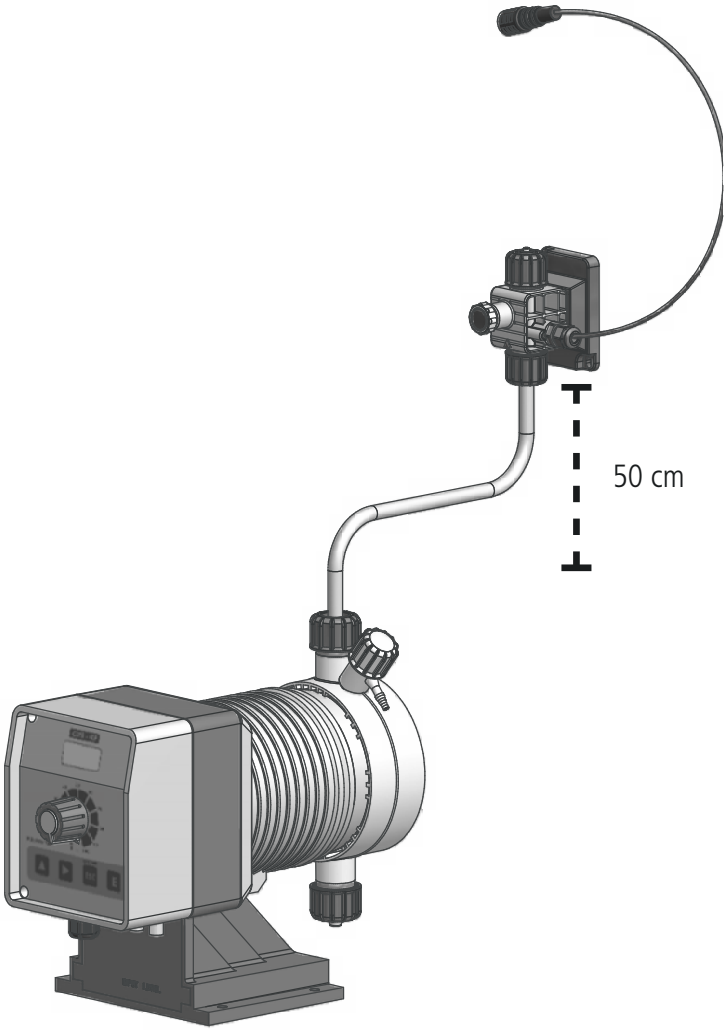

PRODUCT SERVICE REPAIR FORM

ENCLOSE THE PRESENT FORM TO THE DELIVERY NOTE

DATE .....

SENDER

Company name.....

Address .....

Phone no. .....

Contact person.....

PRODUCT TYPE (see product label)

DEVICE CODE .....

S/N (serial number).....

OPERATING CONDITIONS

Location/installation description .....

.....

Chemical .....

Start-up (date) ..... Running time (approx. hours).....

REMOVE ALL THE LIQUID INTO THE PUMP HEAD AND DRY IT BEFORE PACKAGING IN ITS ORIGINAL BOX.

DESCRIPTION OF PROBLEM

☐ MECHANICAL

- Wear parts.....
- Brekage/other damages .....
- Corrosion.....
- Other.....

☐ ELECTRICAL

- Connections, connector, cables .....
- Operating controls (keyboard, display, etc.) .....
- Elettronics.....
- Other.....

☐ LEAKS

- Connections.....
- Pump head .....

☐ NOT OR INADEQUATE FUNCTION/OTHER

.....

.....

.....

I declare that the dosing pump is free of any hazardous chemical.

Signature of the compiler

Company stamp

SUMMARY

GENERAL SAFETY GUIDELINES....2
PURPOSE OF USE AND SAFETY....3
LEGEND....3
ENVIRONMENTAL SAFETY....4
LABEL....4
SPARE PARTS....4
TRANSPORTATION AND STORAGE....5
1. Introduction....6
1.1 AMS MF Series....6
1.2 AMSA MF Series....6
1.3 AMS AC MF Series....6
1.4 Working modes....6
2. UNPACKING....7
3. Pump's description....8
4. Before to Install warnings....10
5. Installation draw....11
6. Hydraulic installation....12
7. Self-Venting pump head installation....15
8. Electrical Installation....16
9. Basic settings....18
10. Priming....20
11. Pump's functions summary....21
12. Pump's functions summary- ALARMS....22
13. Quick Guide - Main Menu (Prog [1] Mode)....23
14. Quick Guide - Main Menu (Prog [2] Setup)....24
15. Quick Guide - Main Menu (Prog [3] Stat)....25
16. Setup....26
17. "Load default" and "Reset Password" procedure....34
18. Working procedure setup....35
19. "CONSTANT" working mode....38
20. "DIVIDE" working mode....39
21. "MULTIPLY" working mode....40
22. "PPM" working mode....41
23. "PERC" working mode....42
24. "MLQ" working mode....43
25. "BATCH" working mode....44
26. "VOLT" working mode....45
27. "mA" working mode....46
28. STATISTICS management....47
29. Troubleshooting....48
30. Fuse and main board replacement....49
31. Main Board....50

A Appendix. Maintenance.....51
Maintenance schedule 51
Maintenance inspection 51
Shutdown procedure.....52
Features.....53
B Appendix. Construction Materials and Technical info 53
Materials.....54
C Appendix. Delivery Curves 55
C Appendix. Delivery Curves for self-purge pump head.....56
C Appendix. Delivery Curves for compressed air models.....57
D Appendix. Dimensions.....58
E Appendix. Chemical Compatibility Table 59
F Appendix. Hoses resistance table 60
G Appendix. Exploded view 61
H Appendix. "SEFL" Installation 62
PRODUCT SERVICE REPAIR FORM 63

PRECAUTIONS RELATING TO DIRECTIVES, REGULATIONS AND STANDARDS

§ CE/EU and UKCA marking

We guarantee that this product meets the essential requirements of the applicable Directives and Regulations based on the following specifications. Please carefully consider the following specifications for use of the product in European Union member countries and the United Kingdom.

• CE/EU harmonized directives and standards

Directives
DIRECTIVE 2006/42/EC
DIRECTIVE 2014/35/EU
DIRECTIVE 2014/30/EU
DIRECTIVE 2011/65/EU
DELEGATED DIRECTIVE (EU) 2015/863

Harmonized standards
EN ISO 12100
EN 809
EN ISO 20361
EN IEC 61326-1
EN 61010-1
EN IEC 63000

• UKCA harmonized regulations and standards

Regulations
2008 No. 1597
2008 2016 No. 1091
2016 No. 1101
2012 No. 3032

Harmonized standards
BS EN ISO 12100
BS EN 809
BS EN ISO 20361
BS EN IEC 61326-1
BS EN 61010-1
BS EN IEC 63000

Disposal of end-of-life equipment by users

This symbol warns you not to dispose of the product with normal waste. Respect human health and the environment by giving the discarded equipment to a designated collection center for the recycling of electronic and electrical equipment. For more information visit the online site.

When dismantling a pump please separate material types and send them according to local recycling disposal requirements. We appreciate your efforts in supporting your local Recycle Environmental Program. Working together we'll form an active union to assure the world's invaluable resources are conserved.