"RAC"- "RACV" Pneumatic Dosing Pump

Data Sheet

Features:

Power supply: 230 VAC (190÷265 VAC)
Power supply: 24 20÷32 VAC/VDC)
Power supply: 48 VAC (42÷54 VAC)

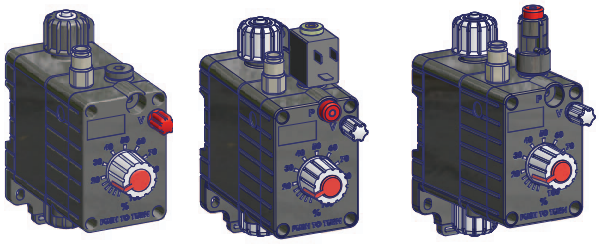

RAC RACV RACP

ENVIRONMENTAL WORK:

-10°C ÷ +50°C (14°F ÷ 122°F)

MAIN INFO:

- Front controls
- Front purge
- Manual priming button (RACP)
- Electrovalve (RACV)
- Single injection control knob

- 3 installation modes:

- Horizontal (with bracket)
- Wall
- "DIN"

Multiple pumps installation (side by side)

MODELS		
Code	**MOD.**	**DESCRIPTION**
C	RAC	Pneumatic dosing pump.
V	RACV	Pneumatic dosing pump with electrovalve.
P	RACP	Pneumatic dosing pump with priming button.

CAPACITIES				
MODELS			**HOSES**	**VALVE**
0601	1 l/h at 6 bar	0,26 GPH at 87 PSI	4 X 6 o 6 X 8	1/2"
0603	3 l/h at 6 bar	0,79 GPH at 87 PSI	4 X 6 o 6 X 8	1/2"
0606	6 l/h at 6 bar	1,58 GPH at 87 PSI	4 X 6 o 6 X 8	1/2"
0612	12 l/h at 6 bar	3,17 GPH at 87 PSI	4 X 6 o 6 X 8	1/2"

POWER SUPPLY	
0#	without electrovalve (RAC mod. only)
11	230 VAC
10	24 VAC
18	24 VDC
20	48 VAC

Model RA C 0606 V 00 0#

LIQUID ENDS								
	HEAD	**ORINGS**	**VALVE**		**DIAPHRAGM**	**HOSES**		**VISCOSITY**
			Body	Balls		Delivery	Suction	Max CPS
V	Polypropylene	Viton ®	Polypropylene	SS	PTFE	Polyethylen	PVC	100
D	Polypropylene	Etilene Propilene	Polypropylene	SS	PTFE	Polyethylen	PVC	100
W	Polypropylene	Nytrile	Polypropylene	SS	PTFE	Polyethylen	PVC	100
Viton ® is a registered trademark DuPont Dow Elastomers.								

INFORMATION FOR RAC AND RACV						
	Strokes speed		**Stroke length range reliability**	**Power consumption at max flow (230 VAC)**	**Air consumption l/min**	**Air supply bar**
	min	max				
0601	12	120	from 30% to 100%	8 Watt (RACV with electrovalve)	2,4	6-8
0603	12	120			2,4	6-8
0606	12	120			2,4	6-8
0612	12	120			2,4	6-8
0615	12	120			2,4	6-8

Via Donatori di Sangue, 1 - 02100 Rieti (Italy)
+39 074622841 | emecpumps.com

Specifications subject to change without notice | R2025

emec SIMPLE AS WATER

IQNET CERTIFIED MANAGEMENT SYSTEM
qualityaustria SYSTEM CERTIFIED
ISO 9001:2015 No.07728/0
ISO 14001:2015 No.00997/0
ISO 45001:2018 No.01121/0

"RAC"- "RACV" Pneumatic Dosing Pump

Data Sheet

RAC

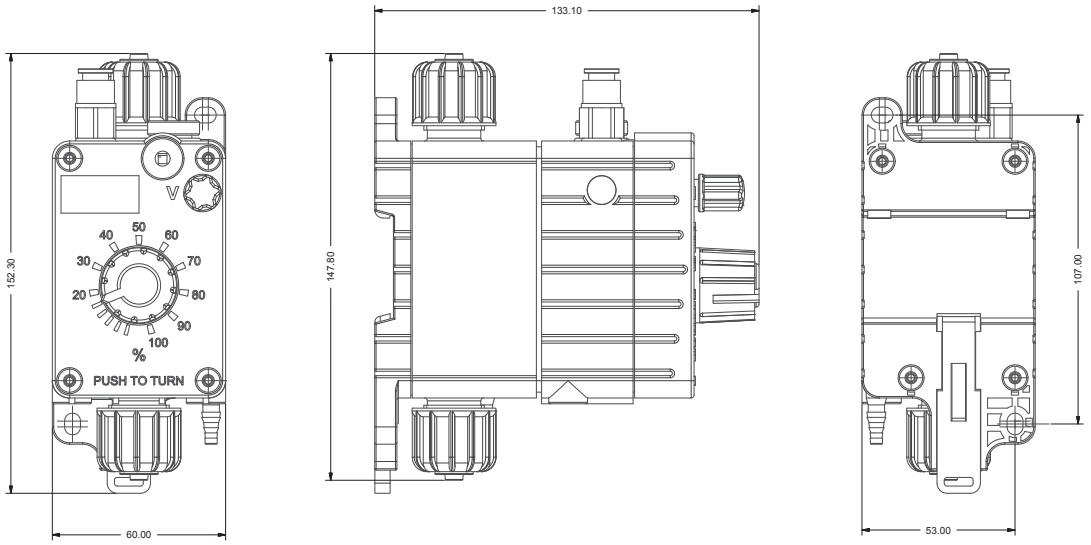

RACP

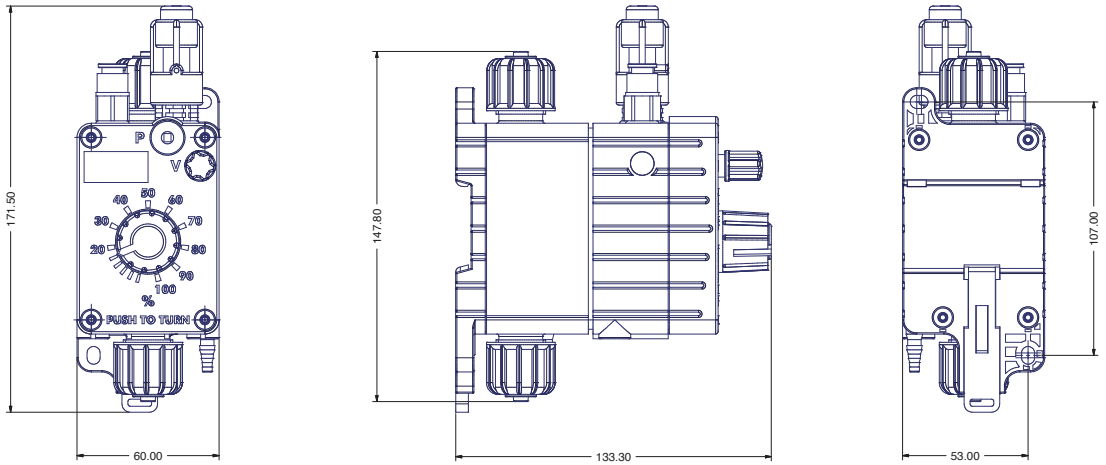

RACV

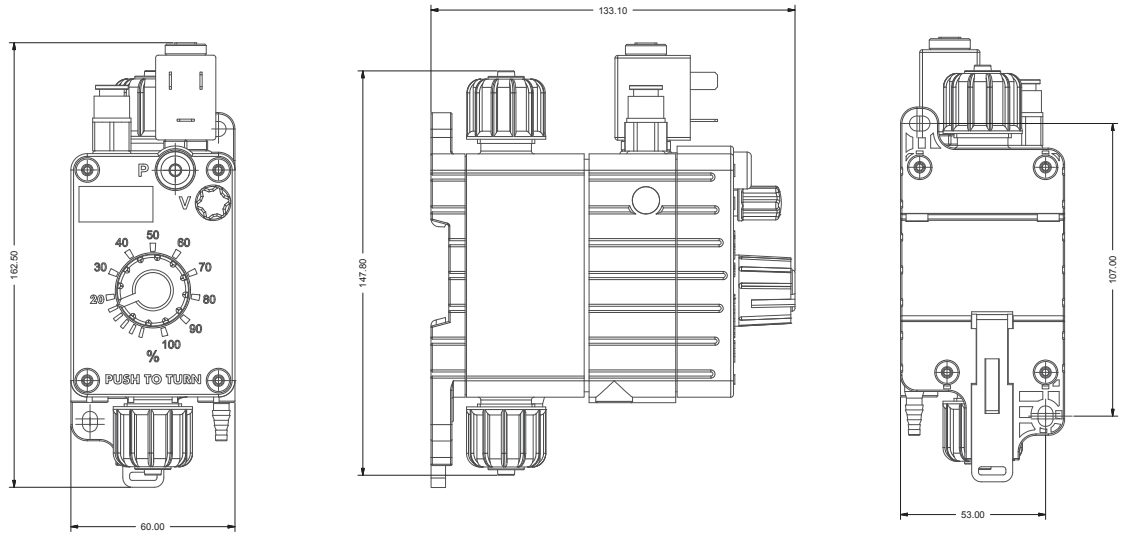

Via Donatori di Sangue, 1 - 02100 Rieti (Italy)
+39 074622841 | emecpumps.com

Specifications subject to change without notice | R2025

emec
SIMPLE AS WATER

IQNET CERTIFIED MANAGEMENT SYSTEM
qualityaustria
SYSTEM CERTIFIED
ISO 9001:2015 No.07728/0
ISO 14001:2015 No.00997/0
ISO 45001:2018 No.01121/0