TURBINE PULSE EMITTER WATER METER

Data Sheet

R14-07-22

FEATURES

- Threaded pulse emitter water meter for cold and hot water, single (mod. 15-20-25-30-40) and multiple (mod. 50) jet counter with wet or dry dial
- Thread sizes range: from 1/2" to 2"
- Brass case and head (except for 50mm 2" model with cast iron case and head)
- Working temperature: cold water up to 30° C, hot water up to 90° C (mod. CTCI)
- 2m cable length (RG58), equipped with BNC connector
- Reed contact with 10^9 closing operations
- Max voltage 250 VAC, 200 VDC
- Max current 1.0 A
- Max power 10 VA
- Available water meter without pulse emitter
- U0-D0: no straight pipe runs are required upstream or downstream of the meter
- All models are MID approved in accordance with the applicable Directive (Module B+D), and compliant with EN 14154 and OIML R49 standard
- All models are certified for use with drinking water in accordance with D.M. 174

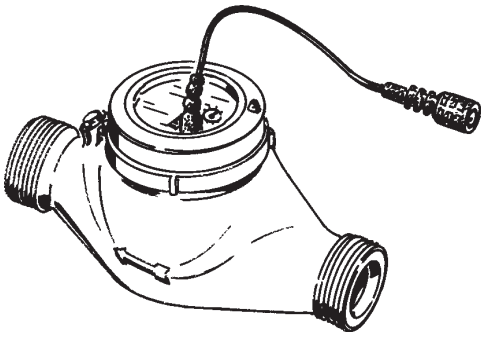

Configuration Info

MODELS		
CTCI	"***CTCI***"	hot water pulse emitter water meter
CTFI	"***CTFI***"	cold water pulse emitter water meter
CTFIT	"***CTFIT***"	cold water pulse emitter water meter, PTFE internal and external coating
CTCIT	"***CTCIT***"	hot water pulse emitter water meter, PTFE internal and external coating
CTFIG	"CTFIG"	cold water pulse emitter water meter with pump "C" holder
CTCIG	"***CTCIG***"	hot water pulse emitter water meter with pump "C" holder
CATCI	"***CATCI***"	hot water pulse emitter water meter, dry dial
CATFI	"***CATFI***"	cold water pulse emitter water meter, dry dial
CATFT	"***CATFIT***"	cold water pulse emitter with dry dial with Teflon inside and outside

Model CTCI. 015 0 04 L 0 2.5

GAUGES		
	inc	mm
015	1/2	15
020	3/4	20
025	1	25
030	1.1/4	30
040	1.1/2	40
050	2	50

CONNECTORS	
0	BNC
1	2 wires
3	2 wires (coaxial cable)

QUANTITY PER PULSES	
L	1 litre
D	10 litres
C	100 litres
M	1000 litres

PULSES PER LITRE
refer to the tables "Pulses per litre"

Via Donatori di Sangue, 1 - 02100 Rieti (Italy)
+39 074622841 | emecpumps.com

Specifications subject to change without notice | R2025

emec SIMPLE AS WATER

IQNET CERTIFIED MANAGEMENT SYSTEM

qualityaustria SYSTEM CERTIFIED
ISO 9001:2015 No.07728/0
ISO 14001:2015 No.00997/0
ISO 45001:2018 No.01121/0

TURBINE PULSE EMITTER WATER METER Data Sheet

PULSES PER LITRE

Pulses per liter table for CTFI / CTCI / CTFIT / CTCIT						
Pulses for	Water Meter Caliber					
	15	20	25	30	40	50
1 lt	35 - 70 - 140 1-2-4	22.5 - 45 90 1-2-4	12 - 24 48 1-2-4	12 - 24 48 1-2-4	4.5 - 9 18 1-2-4	1-2-4
10 lt	1-2-4	1-2-4	1-2-4	1-2-4	1-2-4	1-2-4
100 lt	1-2-4	1-2-4	1-2-4	1-2-4	1-2-4	1-2-4
1000 lt	1-2-4	1-2-4	1-2-4	1-2-4	1-2-4	1-2-4

Pulses per liter table for CATFI / CATFIT / CATCI / CATCIT						
Pulses for	Water Meter Caliber					
	15	20	25	30	40	50
1 lt	35 - 70 - 140 1-2-4	22.5 - 45 90 1-2-4	1-2-4	1-2-4	1-2-4	1-2-4
10 lt	1-2-4	1-2-4	1-2-4	1-2-4	1-2-4	1-2-4
100 lt	1-2-4	1-2-4	1-2-4	1-2-4	1-2-4	1-2-4
1000 lt	1-2-4	1-2-4	1-2-4	1-2-4	1-2-4	1-2-4

DIMENSIONS

Gauge		mm ***inch***	15 ***1/2***	20 ***3/4***	25 ***1***	30 ***1.1/4***	40 ***1.1/2***	50 ***2***
Length withouth hose fittings	A	mm	110	130	160	160	200	300
Length with hose fittings	B	mm	190	228	260	280	340	460
Width	C	mm	80	80	100	100	110	108
Height	D	mm	110	110	132	132	137	130,5
Height from hose	E	mm	24	24	34	34	42	50,5
Weight with hose fitting		Kg	0,850	1,100	1,750	2,000	3,460	-
CEE approval number			B93 320 01	B93 320 02	B97 320 03	B97 320 04	B99 320 11	B02 320 13

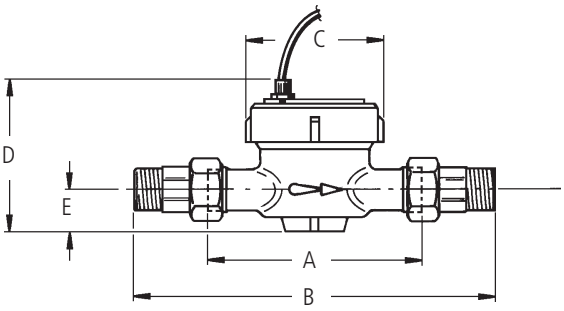

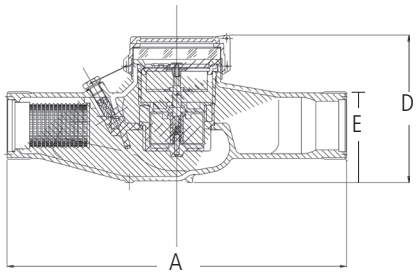

FEATURES

Gauge	mm inch	15 1/2	20 3/4	25 1	30 1.1/4	40 1.1/2	50 2
Inertial breaking	l/h	10	15	20	20	25	50
Max temporary flow delivery	m³/h	3	5	7	10	20	30
Flow delivery with 10m of load loss	m³/h	3	5	7	10	20	30
Nominal flow rate	m³/h	1.5	2.5	3.5	5	10	15
First precision delivery ± 5%	l/h	30	50	70	100	200	450
Second precision delivery ± 2%	l/h	120	200	280	400	800	3000
Max operation pressure	bar	16	16	16	16	16	16
Minimum reading	l	0.1	0.1	0.1	0.1	0.1	0.5
Maximum reading	m³	10^5	10^5	10^5	10^5	10^5	10^6
Turbine revs per liter	g/l	34.8	22.5	11.7	11.7	4.5	3.16

ERROR CURVE

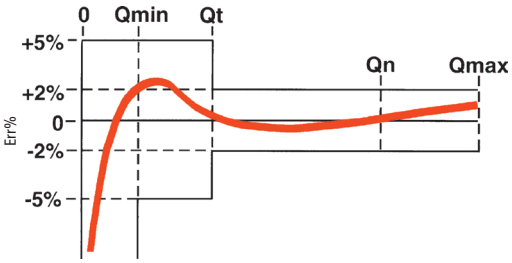

LOAD LOSS DIAGRAM

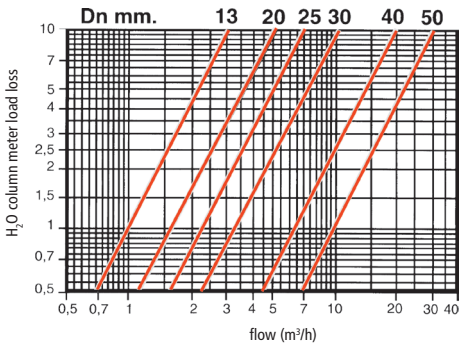

Via Donatori di Sangue, 1 - 02100 Rieti (Italy)
+39 074622841 | emecpumps.com

Specifications subject to change without notice | R2025

emec SIMPLE AS WATER

IQNET CERTIFIED MANAGEMENT SYSTEM

qualityaustria SYSTEM CERTIFIED
ISO 9001:2015 No.07728/0
ISO 14001:2015 No.00997/0
ISO 45001:2018 No.01121/0