TEMPERATURE PROBES series

Data Sheet

Accurate and reliable control of processes.
Easy-maintenance, provides accurate reading values and fast responses.

ETEPCH18
ETEPTCH18

ETEPCH18/L
ETEPTCH18/L

TEMPERATURE ELECTRODES

MODELS	Electrode	Range	Pressure	Cable	Body	Features	Application
ETEPCH18	temperature compensation	0-100°C	10 bar	4 m	PVDF (1/2" threading)	NTC 10Kohm	ECL6 PEF
ETEPCH18/L	temperature compensation	0-100°C	10 bar	4 m	PVDF (1/2" threading)	NTC 10Kohm	NPED PEF22 - PEF23
ETEPTCH18	temperature compensation	0-100°C	10 bar	4 m	PVDF (1/2" threading)	PT100	ECL6 PEF
ETEPTCH18/L	temperature compensation	0-100°C	10 bar	4 m	PVDF (1/2" threading)	PT100	NPED PEF22 - PEF23

Via Donatori di Sangue, 1 - 02100 Rieti (Italy)
+39 074622841 | emecpumps.com

Specifications subject to change without notice | R2025

emec
SIMPLE AS WATER

IQNET CERTIFIED MANAGEMENT SYSTEM
qualityaustria SYSTEM CERTIFIED
ISO 9001:2015 No.07728/0
ISO 14001:2015 No.00997/0
ISO 45001:2018 No.01121/0

ETEPCH18
ETEPTCH18

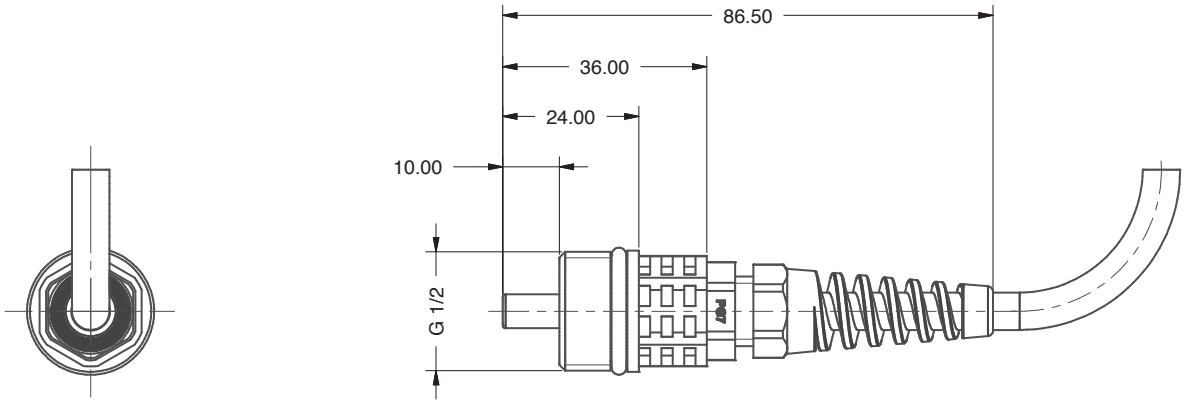
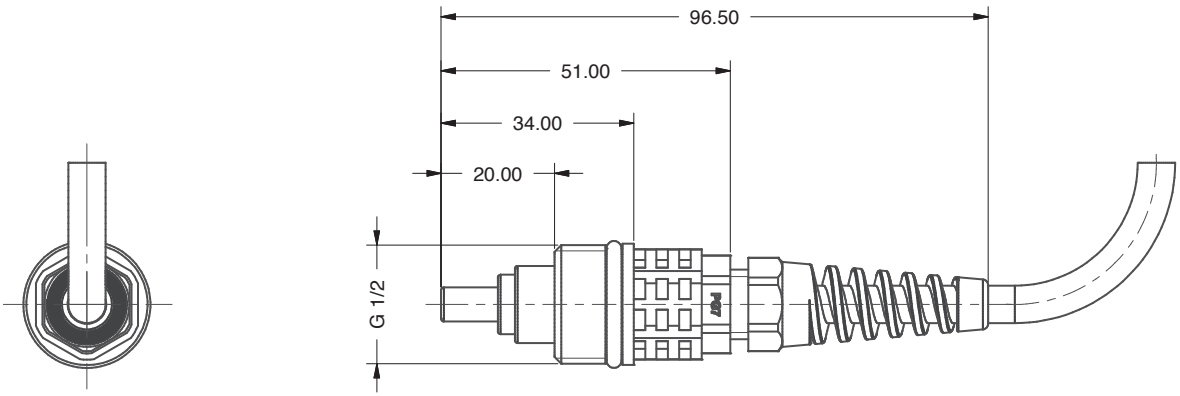
ETEPCH18/L
ETEPTCH18/L