ETRC2

FLUORESCENT TRACER PROBE - PTSA

The ETRC2 inline fluorometer probe measures the concentration of a fluorescent tracer, PTSA (pyrenetetrasulfonic acid), in water. The fluidic and optical arrangement of the ETRC2 probe is designed to overcome many shortcomings associated with other fluorometers. It can be easily inserted into the custom-made tee with a compression fitting port designed to ensure correct positioning of the ETRC2 probe in the fluid stream. the ETRC2 probe custom mounting tee has two ¾ inch female NPT ports for plumbing into an existing ¾ inch sample water line. The ETRC2 probe can be connected to any device that accepts an isolated or non-isolated 4-20mA input. In addition to measuring fluorescence, the ETRC2 probe has extra photo-electric components that monitor the color and turbidity of the sample water. This extra feature allows the ETRC2 probe to automatically compensate for color and turbidity to eliminate interferences common in real-world samples. The ETRC2 probe has a short fluidic channel that can be easily cleaned. The ETRC2 probe uses a narrow wavelength band gallium phosphide photodiode, integrated with a high temperature tolerant and high humidity resistant optical filter. This combination greatly enhances the robustness of the ETRC2 probe. It can be operated under a wide range of ambient conditions without the need of humidity and temperature regulation. The performance of the ETRC2 probe is designed to be stable and consistent for a long period time.

Modbus RS-485 CE

- Any standard containing PTSA in the range of 20 to 200 ppb can be used for the calibration. The standard can be the water sample itself when the PTSA concentration of the sample has been measured by another fluorometer that has been calibrated. This allows the ETRC2 probe to be calibrated without being removed from the system.
- Automatic compensation
- Diagnostic information (probe fouling, color or turbidity over range, failure modes) can be communicated to digital displays via Modbus RTU.
- The ETRC2 probe can be easily removed from the custom tee for cleaning without the need for any tools.

Power Supply Required	24 (±2) VDC @ 65 mA
Signal Output	4-20 mA and RS-485 Modbus RTU
Temperature, Sample Water	40 – 104 °F (4 – 40 °C)
Temperature, Ambient during operation	40 – 120 °F (4 – 49 °C)
Temperature, Ambient during storage	20 – 140 °F(-7 – 60 °C)
Sample Pressure	100 PSI
Cable Length	1,5 metri withi IP67 connector
Dimension	6.8 inch (172.7 mm), body diameter 1.44 inch (36.6 mm)
Weight	0.37 pounds (170 grams)
PTSA Measuring Range	from 0 to 300 ppb (3σ error: ±1 ppb or 5% of reading)

Via Donatori di Sangue, 1 - 02100 Rieti (Italy)
+39 074622841 | emecpumps.com

Specifications subject to change without notice | R2025

emec SIMPLE AS WATER

IQNET CERTIFIED MANAGEMENT SYSTEM
qualityaustria SYSTEM CERTIFIED
ISO 9001:2015 No.07728/0
ISO 14001:2015 No.00997/0
ISO 45001:2018 No.01121/0

3D AND DIMENSION (MM)

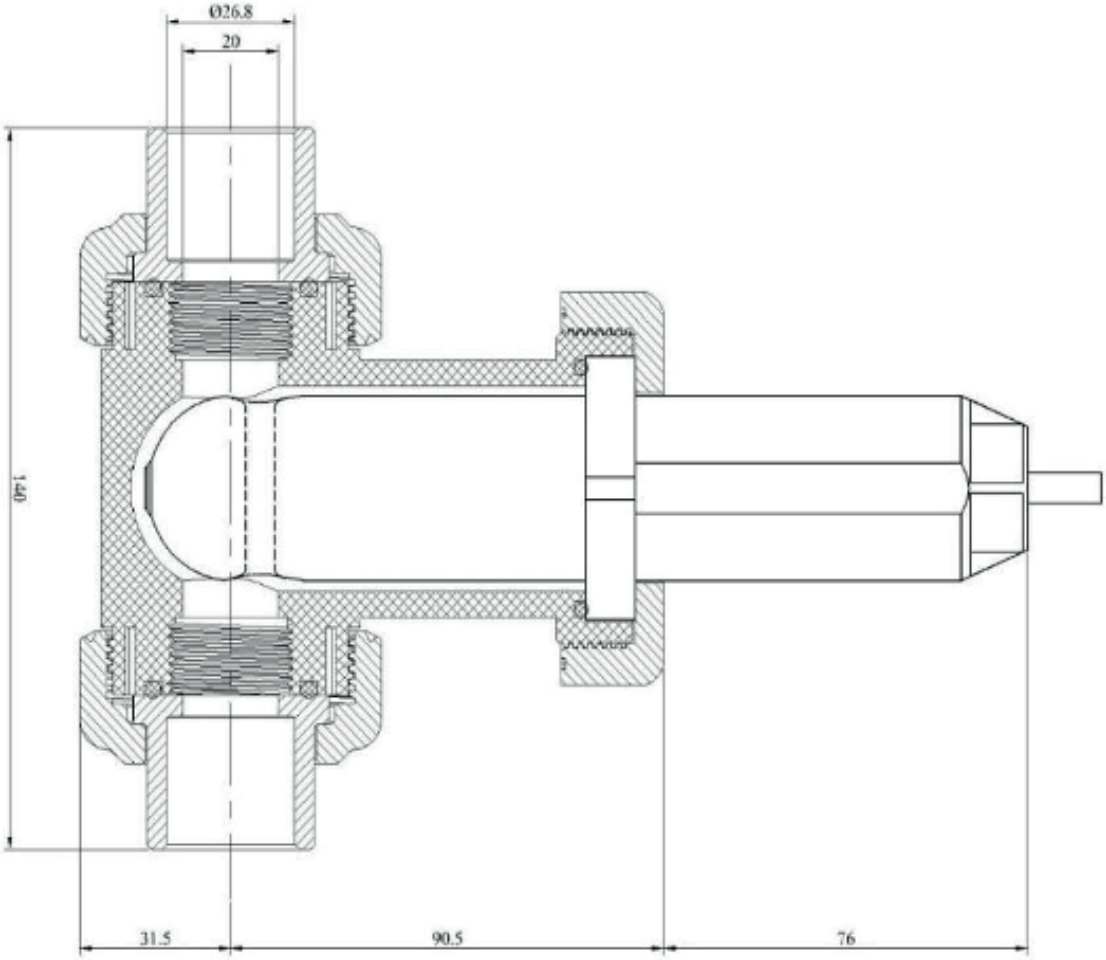

Via Donatori di Sangue, 1 - 02100 Rieti (Italy)
+39 074622841 | emecpumps.com

Specifications subject to change without notice | R2025

emec
SIMPLE AS WATER

IQNET CERTIFIED MANAGEMENT SYSTEM
qualityaustria SYSTEM CERTIFIED
ISO 9001:2015 No.07728/0
ISO 14001:2015 No.00997/0
ISO 45001:2018 No.01121/0