CONDUCTIVITY PROBES
GRAPHITE ELECTRODES (R 3/4" - G 1/2")

Data Sheet

GRAPHITE CONDUCTIVITY PROBES

Graphite conductivity electrodes with PVDF body are the ideal complement for EMEC controllers. They perform an accurate and reliable operativity into chemical environment. These electrodes are made for an easy maintenance, accurate reading and fast response.

Max	7 bar 60°C
K	1-10

R21024

ECDC/K1
ECDCC/K1
ECDCCPT/K1

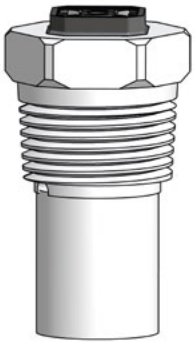

ECDC/K10
ECDCC/K10
ECDCCPT/K10

ECDCM/K1
ECDCCM/K1
ECDCCMPT/K1

MODELS

	ECDC/1	ECDC/10	ECDCC/1	ECDCC/10	ECDCCPT/1	ECDCCPT/10
Working Range	0÷20 mS	0÷200 mS	0÷20 mS	0÷200 mS	0÷20 mS	0÷200 mS
"K" Factor	1	10	1	10	1	10
Max temp. pressure	7 bar/60°C (2 bar/100°C)	7 bar/60°C (2 bar/100°C)	7 bar/60°C (2 bar/100°C)	7 bar/60°C (2 bar/100°C)	7 bar/60°C (2 bar/100°C)	7 bar/60°C (2 bar/100°C)
Body	PVDF	PVDF	PVDF	PVDF	PVDF	PVDF
Electrodes	Graphite	Graphite	Graphite	Graphite	Graphite	Graphite
Diameter	R 3/4"	R 3/4"	R 3/4"	R 3/4"	R 3/4"	R 3/4"
Cable Lenght	4 mt	4 mt	4 mt	4 mt	4 mt	4 mt
Temperature Compensator	N/A	N/A	NTC 10K	NTC 10K	PT100	PT100

	ECDCM/1	ECDCCM/10	ECDCCMPT/1
Working Range	0÷20 mS	0÷200 mS	0÷20 mS
"K" Factor	1	10	1
Max temp. pressure	7 bar/60°C (2 bar/100°C)	7 bar/60°C (2 bar/100°C)	7 bar/60°C (2 bar/100°C)
Body	PVDF	PVDF	PVDF
Electrodes	Graphite	Graphite	Graphite
Diameter	G 1/2"	G 1/2"	G 1/2"
Cable Lenght	4 mt	4 mt	4 mt
Temperature Compensator	N/A	NTC 1'K	PT 100

Via Donatori di Sangue, 1 - 02100 Rieti (Italy)
+39 074622841 | emecpumps.com

Specifications subject to change without notice | R2025

emec SIMPLE AS WATER

IQNET CERTIFIED MANAGEMENT SYSTEM
qualityaustria SYSTEM CERTIFIED
ISO 9001:2015 No.07728/0
ISO 14001:2015 No.00997/0
ISO 45001:2018 No.01121/0

CONDUCTIVITY PROBES

GRAPHITE ELECTRODES (R 3/4" - G 1/2")

Data Sheet

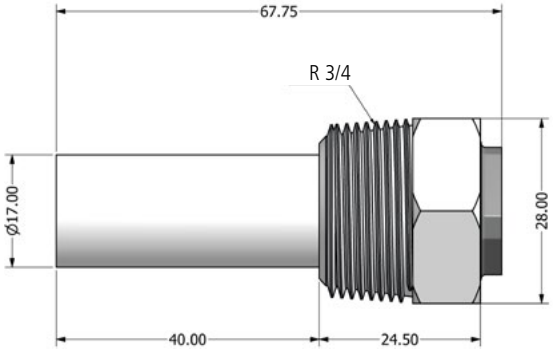

ECDC/K1
ECDCC/K1
ECDCCPT/K1

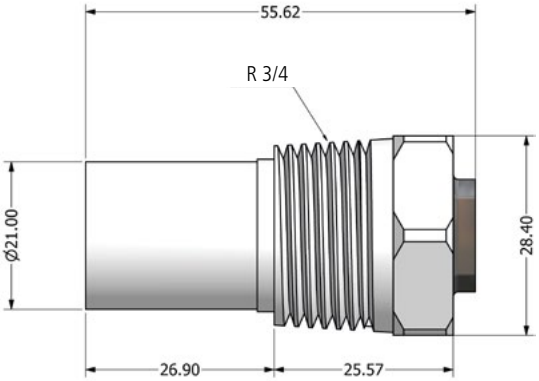

ECDC/K10
ECDCC/K10
ECDCCPT/K10

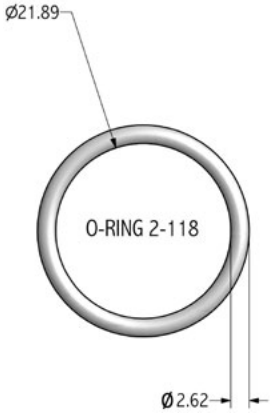

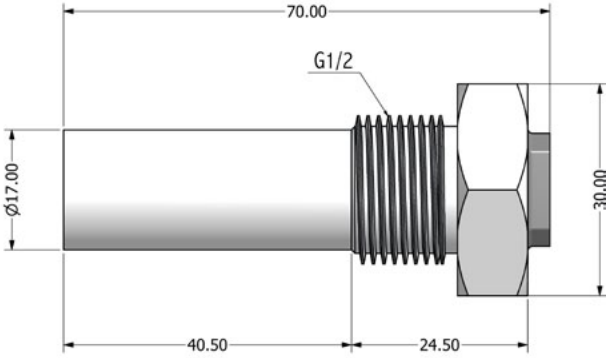

ECDCM/K1
ECDCCM/K1
ECDCCMPT/K1

Connection cable

COMPENSATION	CABLE		WIRES SIZE
N/A	RED	ELECTRODES	4 x 0.14
	BLACK		
	GROUND	GROUND	

NTC 10K	RED	ELECTRODES	4 x 0.14
	BLACK		
	WHITE	NTC 10K	
	GREEN		

PT 100	RED	ELECTRODES	2 x 0.50
	BLACK		
	BLUE	GROUND	4 x 0.22
	GREEN	PT 100	
	BROWN		
	YELLOW-WHITE		

Via Donatori di Sangue, 1 - 02100 Rieti (Italy)
+39 074622841 | emecpumps.com

Specifications subject to change without notice | R2025

emec SIMPLE AS WATER

IQNET CERTIFIED MANAGEMENT SYSTEM
qualityaustria SYSTEM CERTIFIED
ISO 9001:2015 No.07728/0
ISO 14001:2015 No.00997/0
ISO 45001:2018 No.01121/0