ECORR
CORROSION RATE SENSOR

ECORR CORROSION RATE SENSORS

The ECORR corrosion rate sensors are ideal for cooling water treatment monitoring where robustness and affordability are a must. The sensors utilize the linear polarization resistance (LPR) method to produce a raw signal. The raw signal is conditioned, amplified, and digitized directly in the sensor itself. This avoids the interferences and attenuation of the raw signal caused by long-distance wiring needed for other corrosion probes to a separate signal conditioner or transmitter box.

RS-485

MAIN FEATURES

The ECORR corrosion sensors measure sample water conductivity directly and compensate for the conductivity impact on the LPR measurement. In addition to the LPR measurement to obtain the general corrosion rate, the sensors also measure electrochemical noise. The measured noise data is used to calculate an index to quantify the localized corrosion rate also referred to as pitting.

- Anti-electromagnetic interference (anti-EMI) design with stainless steel sensor body
- RS-485 communication
- Three O-ring grooves positioned on the sensor body allow insertion depth control
- Ultra-low corrosion rate down to 0.001 MPY can be accurately measured
- Generalized Corrosion & Localized Corrosion Rate

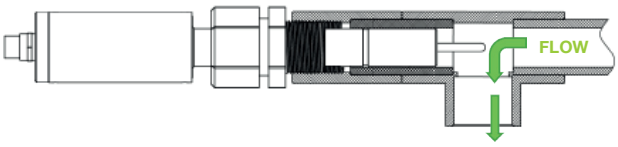

WIRES

- RED +24VDC
- BROWN GND
- 4-20mA (-) GREY
- 4-20mA (+) WHITE for general corrosion
- 4-20mA (+) PINK for localized corrosion
- EARTH / GROUND GREEN
- +RS485 (A) BLUE
- -RS485 (B) YELLOW

SENSOR CLEANING AND MAINTENANCE

For best performance, severely corroded sensor metal electrodes should be replaced. Any deposit on the sensor body and near the base area of the metal electrode should be cleared. Minor corrosion product deposit on the electrode surface is acceptable. Non-corrosion product deposit such as calcium carbonate scale should be removed. The sensor should not be left in stagnant water for a long period unless measuring corrosion rate of the metal in such condition is the purpose for evaluation.

TESTING MATERIALS

Common Designation	UNS	ALLOY FACTOR
Aluminum AA1100	A91100	0.94
Aluminum Alloy AA6061	A96061	0.94
Copper CDA110	C11000	2.00
Arsenical Admiralty Brass CDA443	C44300	1.67
Mild Steel C1010	G10100	1.00
Stainless Steel 304	S30400	0.89

Via Donatori di Sangue, 1 - 02100 Rieti (Italy)
+39 074622841 | emecpumps.com

Specifications subject to change without notice | R2025

emec SIMPLE AS WATER

IQNET CERTIFIED MANAGEMENT SYSTEM
qualityaustria SYSTEM CERTIFIED
ISO 9001:2015 No.07728/0
ISO 14001:2015 No.00997/0
ISO 45001:2018 No.01121/0

ECORR
CORROSION RATE SENSOR

MODEL	ECORR
Power Supply	24V 2W
Output	RS-485 Communication
Dimensions	11.1 In (281.5 mm) long, 0.9 in (23.0 mm) | diameter lower portion, 1.7 in (43.0 mm) upper portion
Weight	687g
Cable Length	5 ft (1.5 m), extension cable available
Range, general corrosion	0.001 - 10 MPY
Range, localizerd corrosion	0 – 100 (304 stainless steel in 10% ferric chloride as 100)
Conductivity	10 - 10,000 µS/cm
Sample temperature	-20 - 50°C
Reading Interval	1 min, 2 min, 5 min, or 20 min
Resolution	0.001 MPY
Alloy Factor	0-3
Installation	Flow cell with 1-inch NPT
Enclosure Material	304 stainless steel
Working Pressure	Up to 100 psi (7 bar)
Temperature	Working: -10 - 50 °C | Storage: -20 - 70 °C
Protection	IP65
Regulation	CE

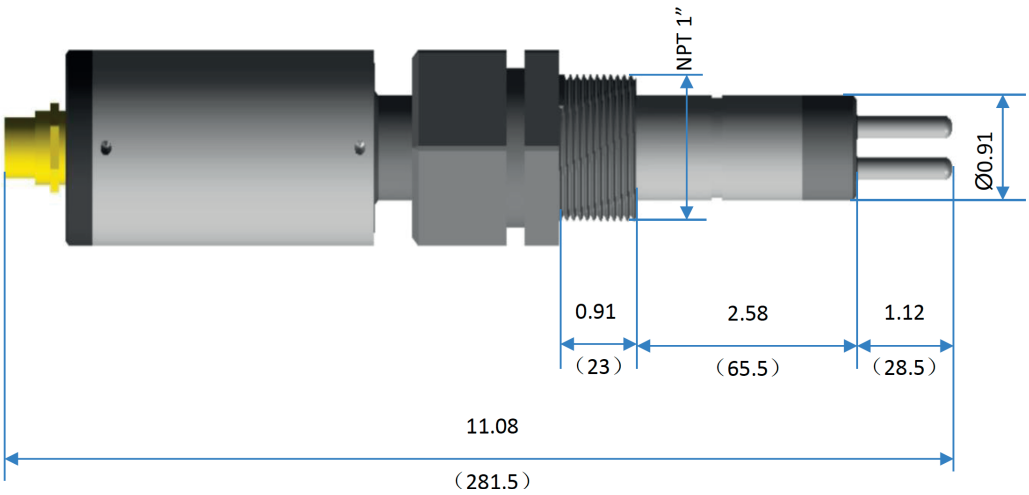

Unit in inch (mm)

Via Donatori di Sangue, 1 - 02100 Rieti (Italy)
+39 074622841 | emecpumps.com

Specifications subject to change without notice | R2025

emec SIMPLE AS WATER

IQNET CERTIFIED MANAGEMENT SYSTEM
qualityaustria SYSTEM CERTIFIED
ISO 9001:2015 No.07728/0
ISO 14001:2015 No.00997/0
ISO 45001:2018 No.01121/0