SLV

VISUAL LEVEL INDICATOR

SLV

The level indicators allow to check the level of the liquid inside a tank at any given time in a constant, clear and precise way. Cheap and highly reliable solution.

› **WORKING PRINCIPLE:** The principle used is that of Archimedes: the liquid from the tank to which the level indicator is applied raises the float revealing the precise point reached inside the tank. A measurement scale placed along the rod in PMMA allows you to read the amount of liquid present.

› **OPTIONS**: Available for TANKS mod. CNTPD 50 / 110 / 200 / 500 or customized.

› **ADVANTAGES:** Continuous indication of the liquid level. Immediate assembly without the use of tools. Total visibility, both front and side. High chemical resistance being made of PVC, PMMA and PE-HD.

Installed on CNT

› Graduted Detection Scale
› Maximum working temperature 50°C
› Maximum working pressure 1 bar
› Maximum tightening pair recommended 80 Nm

Via Donatori di Sangue, 1 - 02100 Rieti (Italy)
+39 074622841 | emecpumps.com

Specifications subject to change without notice | R2025

emec SIMPLE AS WATER

IQNET CERTIFIED MANAGEMENT SYSTEM
qualityaustria SYSTEM CERTIFIED
ISO 9001:2015 No.07728/0
ISO 14001:2015 No.00997/0
ISO 45001:2018 No.01121/0

SLV
VISUAL LEVEL INDICATOR

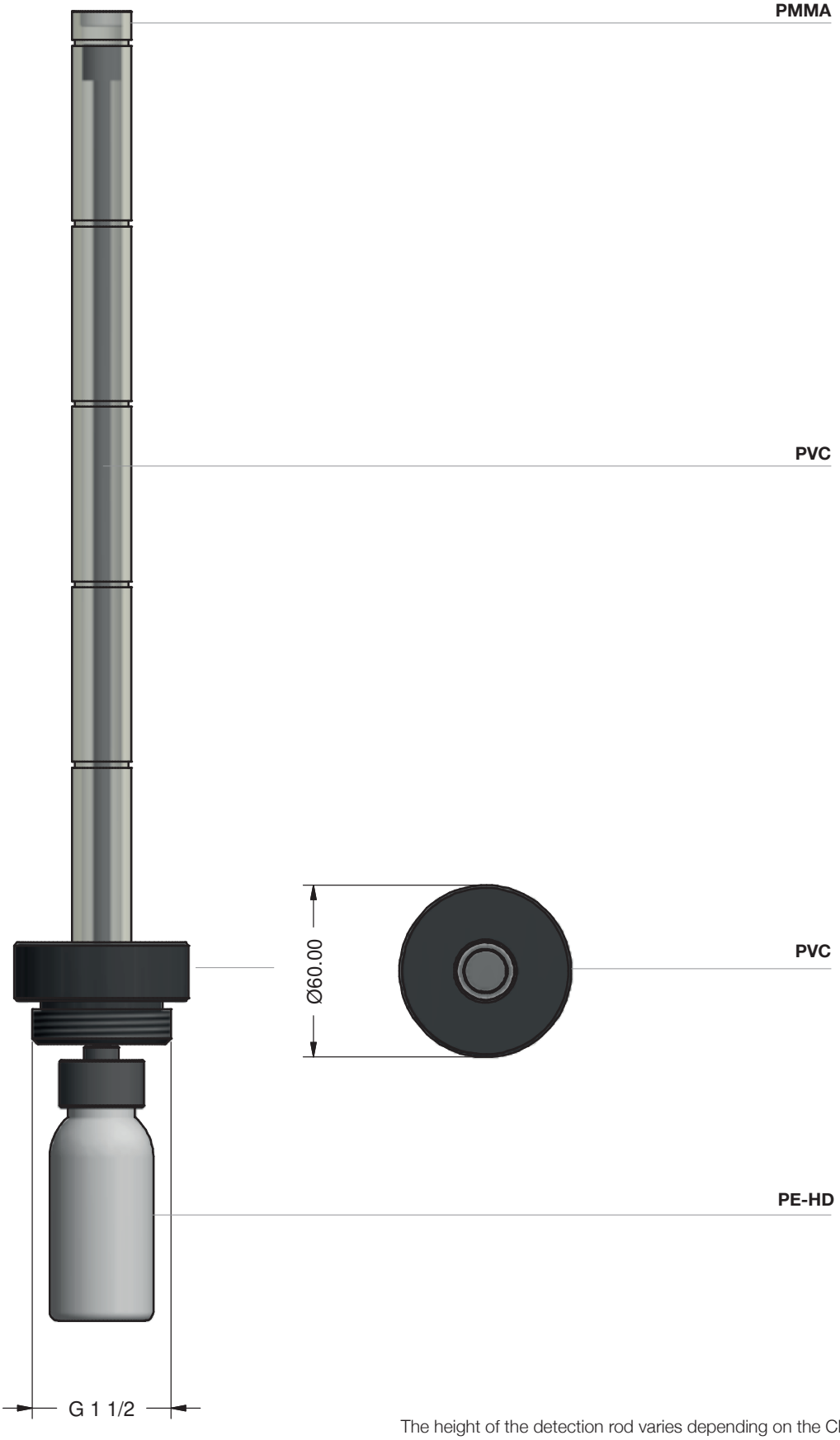

The height of the detection rod varies depending on the CNT size

Via Donatori di Sangue, 1 - 02100 Rieti (Italy)
+39 074622841 | emecpumps.com

Specifications subject to change without notice | R2025

emec
SIMPLE AS WATER

IQNET CERTIFIED MANAGEMENT SYSTEM
qualityaustria SYSTEM CERTIFIED
ISO 9001:2015 No.07728/0
ISO 14001:2015 No.00997/0
ISO 45001:2018 No.01121/0