PRIUS P

Motor driven plunger metering pump

Data Sheet

Motor-driven plunger dosing pump, mechanical actuated, PRIUS combines efficiency and chemical resistance to a wide capacity range for an extensive number of applications.

- Single or three phase motor power supply
- **Ceramic or Stainless Steel plunger**
- Aluminium enclosure
- Double ball check valve
- Tropicalized three-phase motors

Insulation class F
IE energy efficiency 1

Identification code

CUSTOM.	PACKAGING	INTERNAL

P	P	0	0	0	1	0	0	2	4	D	V	1	2	0	0	N	0	0	0

BAR — L/H — COLOR

CAPACITY			
50 Hz		60 Hz	
010024	24 l/h @ 10 bar	**010023**	23 l/h @ 10 bar
010013	13 l/h @ 10 bar	**010011**	11 l/h @ 10 bar
010010	10 l/h @ 10 bar	**010005**	5 l/h @ 10 bar
010005	5 l/h @ 10 bar	**010076**	76 l/h @ 10 bar
010080	80 l/h @ 10 bar	**010038**	38 l/h @ 10 bar
010043	43 l/h @ 10 bar	**010019**	126 l/h @ 10 bar
010032	32 l/h @ 10 bar	**010126**	126 l/h @ 10 bar
010016	16 l/h @ 10 bar	**010063**	63 l/h @ 10 bar
010130	130 l/h @ 10 bar	**010031**	31 l/h @ 10 bar
010070	70 l/h @ 10 bar	**010195**	195 l/h @ 10 bar
010052	52 l/h @ 10 bar	**010097**	97 l/h @ 10 bar
010026	26 l/h @ 10 bar	**010048**	48 l/h @ 10 bar
010210	210 l/h @ 10 bar	**010300**	300 l/h @ 10 bar
010113	113 l/h @ 10 bar	**010150**	150 l/h @ 10 bar
010084	84 l/h @ 10 bar	**010075**	75 l/h @ 10 bar
010042	42 l/h @ 10 bar	**007469**	469 l/h @ 7 bar
010320	320 l/h @ 10 bar	**007234**	234 l/h @ 7 bar
010172	172 l/h @ 10 bar	**007117**	117 l/h @ 7 bar
010128	128 l/h @ 10 bar		
010064	64 l/h @ 10 bar		
007508	508 l/h @ 7 bar		
007273	273 l/h @ 7 bar		
007203	203 l/h @ 7 bar		
007101	101 l/h @ 7 bar		

MATERIAL pump head + plunger	
D	PP + CERAMIC (SIALOX 96)
E	SS (AISI316L) + SS (AISI420)

	MOTOR	POWER SUPPLY	PHASE
1	0,18Kw	220-240/380-420 - 50 Hz	3-PHASE
2	0,37Kw	220-240/380-420 - 50 Hz	3-PHASE
3	0,18Kw	220/380 - 60 Hz	3-PHASE
4	0,37Kw	220/380 - 60 Hz	3-PHASE

REDUCTION GEAR	
1	8:1
2	15:1
4	20:1

O RING	
V	FKM B
D	Dutral
W	WAX

LUBRICANT TYPE	
BRAND	**MODEL**
MOBIL	MOBILGEAR 632
SHELL	OMALA OIL 320
BP	ENERGOL GR-XP 320
IP	MELLANA OIL 320
ESSO	SPARTAN EP 320
AGIP	BLASIA 320

Via Donatori di Sangue, 1 - 02100 Rieti (Italy)
+39 074622841 | emecpumps.com

Specifications subject to change without notice | R2025

emec SIMPLE AS WATER

IQNET CERTIFIED MANAGEMENT SYSTEM
qualityaustria SYSTEM CERTIFIED
ISO 9001:2015 No.07728/0
ISO 14001:2015 No.00997/0
ISO 45001:2018 No.01121/0

PRIUS P

Motor driven plunger metering pump

Data Sheet

"PRIUS P" SERIES - 50 Hz / 3-PHASE MOTOR

Features

- Aluminium enclosure
- Ceramic (SIALOX96) piston and PP pump head or SS (AISI420) pump head and piston
- Power supply: 220-240/380-420 V - Δ/Y connection
- Environment temperature: .....-10-40 °C (14-104 °F)
- Chemical temperature with SS pump head: .....-10-90 °C (14-194 °F)*
- Chemical temperature with PP pump head: .....-10-40 °C (14-104 °F)
- Installation class II
- Pollution level 2
- Audible noise.....78 dbA (± 5 dB)
- Protection degree .....IP 55
- Max suction height .....3 m
- Oil capacity.....0,3 lt (Refer to "Lubricant type" table)

* The specified temperature can be exceeded temporarily (max 15') for sterilization or flushing with hot water.

MOTORS

0,18 kW: 3-phase 230 V 1350 rpm
0,37 kW: 3-phase 230 V 1370 rpm

PRIUS P - PP PUMP HEAD

PRIUS P - SS PUMP HEAD

Via Donatori di Sangue, 1 - 02100 Rieti (Italy)
+39 074622841 | emecpumps.com

Specifications subject to change without notice | R2025

emec SIMPLE AS WATER

IQNET CERTIFIED MANAGEMENT SYSTEM
qualityaustria SYSTEM CERTIFIED
ISO 9001:2015 No.07728/0
ISO 14001:2015 No.00997/0
ISO 45001:2018 No.01121/0

PRIUS P

Motor driven plunger metering pump

Data Sheet

PRIUS P WITH PP PUMP HEAD AND CERAMIC PLUNGER
50 HZ / 3-PHASE MOTOR

PRIUS P 50 Hz								
stroke length	PLUNGER diam. (mm)	PRIUS P 50 Hz	Stroke/1'	Pressure bar	Capacity l/h	Motor	HOSES CONNECTION PP	INSTALLATION KIT
15 mm	14	**010024**	175	10	24	0,18 kW	G1/2" 12x18	A
		010013	94		13			
		010010	70		10			
		010005	35		5			
	25	**010080**	175	10	80	0,18 kW	G1/2" 12x18	A
		010043	94		43			
		010032	70		32			
		010016	35		16			
	32	**010130**	175	10	130	0,18 kW	G1/2" 12x18	A
		010070	94		70			
		010052	70		52			
		010026	35		26			
	40	**010210**	175	10	210	0,37 kW	G3/4" d.i. 18 mm	B
		010113	94		113			
		010084	70		84			
		010042	35		42			
	50	**010320**	175	10	320	0,37 kW	G3/4" d.i. 18 mm	B
		010172	94		172			
		010128	70		128			
		010064	35		64			

ACCESSORIES

A. INSTALLATION KIT INCLUDED
1/2" foot filter with 13 mm (int. diam.) hose fitting
3/4" injection valve
13 x16 PVDF or 12 X 18 PVC delivery hose
13 x16 PVDF or 12 X 18 PVC suction hose

B. INSTALLATION KIT (OPTION)
1 1/2"foot filter with 18 mm (int. diam.) hose fitting (G1 1/2" - 18 mm)
1 1/2" injection valve

C. INSTALLATION KIT (OPTION)
1 1/2"foot filter with 32 mm (int. diam.) hose fitting (G1 1/2" - 32 mm)
1 1/2" injection valve

Via Donatori di Sangue, 1 - 02100 Rieti (Italy)
+39 074622841 | emecpumps.com

Specifications subject to change without notice | R2025

emec SIMPLE AS WATER

IQNET CERTIFIED MANAGEMENT SYSTEM
qualityaustria SYSTEM CERTIFIED
ISO 9001:2015 No.07728/0
ISO 14001:2015 No.00997/0
ISO 45001:2018 No.01121/0

PRIUS P

Motor driven plunger metering pump

Data Sheet

PRIUS P WITH SS PUMP HEAD AND PLUNGER
50 HZ / 3-PHASE MOTOR

Stainless Steel pump does not fit installation kit.

PRIUS P 50 Hz							
stroke length	PLUNGER diam. (mm)	PRIUS P 50 Hz	Stroke/1'	Pressure bar	Capacity l/h	Motor	HOSES CONNECTION SS
15 mm	14	**010024**	175	10	24	0,18 kW	R1/2"
		010013	94		13		
		010010	70		10		
		010005	35		5		
	25	**010080**	175	10	80	0,18 kW	R1/2"
		010043	94		43		
		010032	70		32		
		010016	35		16		
	32	**010130**	175	10	130	0,18 kW	R1/2"
		010070	94		70		
		010052	70		52		
		010026	35		26		
	40	**010210**	175	10	210	0,37 kW	R3/4"
		010113	94		113		
		010084	70		84		
		010042	35		42		
	50	**010320**	175	10	320	0,37 kW	R3/4"
		010172	94		172		
		010128	70		128		
		010064	35		64		
	63	**007508**	175	7	508	0,55 kW	R1"
		007273	94		273	0,37 kW	
		007203	70		203		
		007101	35		101		

Via Donatori di Sangue, 1 - 02100 Rieti (Italy)
+39 074622841 | emecpumps.com

Specifications subject to change without notice | R2025

emec SIMPLE AS WATER

IQNET CERTIFIED MANAGEMENT SYSTEM
qualityaustria SYSTEM CERTIFIED
ISO 9001:2015 No.07728/0
ISO 14001:2015 No.00997/0
ISO 45001:2018 No.01121/0

PRIUS P

Motor driven plunger metering pump

Data Sheet

PRIUS P WITH PP PUMP HEAD AND CERAMIC PLUNGER
60 HZ / 3-PHASE MOTOR

PRIUS P 60 Hz								
stroke length	PLUNGER diam. (mm)	PRIUS P 60 Hz	Stroke/1'	Pressure bar	Capacity l/h	Motor	HOSES CONNECTION PP	INSTALLATION KIT
15 mm	14	**010023**	175	10	23	0,18 kW	G1/2" 12x18	A
		010011	87		11			
		010005	44		5			
	25	**010076**	175	10	76	0,18 kW	G1/2" 12x18	A
		010038	87		38			
		010019	44		19			
	32	**010126**	175	10	126	0,18 kW	G1/2" 12x18	A
		010063	87		63			
		010031	44		31			
	40	**010195**	175	10	195	0,37 kW	G3/4" d.i. 18 mm	B
		010097	87		97			
		010048	44		48			
	50	**010300**	175	10	300	0,37 kW	G3/4" d.i. 18 mm	B
		010150	87		150			
		010075	44		75			

PRIUS P WITH SS PUMP HEAD AND PLUNGER
60 HZ / 3-PHASE MOTOR

PRIUS P 60 Hz							
stroke length	PLUNGER diam. (mm)	PRIUS P 60 Hz	Stroke/1'	Pressure bar	Capacity l/h	Motor	HOSES CONNECTION SS
15 mm	14	**010023**	175	10	23	0,18 kW	R1/2"
		010011	87		11		
		010005	44		5		
	25	**010076**	175	10	76	0,18 kW	R1/2"
		010038	87		38		
		010019	44		19		
	32	**010126**	175	10	126	0,18 kW	R1/2"
		010063	87		63		
		010031	44		31		
	40	**010195**	175	10	195	0,37 kW	R3/4"
		010097	87		97		
		010048	44		48		
	50	**010300**	175	10	300	0,37 kW	R3/4"
		010150	87		150		
		010075	44		75		
	63	**007469**	175	7	469	0,55 kW	R1"
		007234	87		234	0,37 kW	
		007117	44		117		

Via Donatori di Sangue, 1 - 02100 Rieti (Italy)
+39 074622841 | emecpumps.com

Specifications subject to change without notice | R2025

emec SIMPLE AS WATER

IQNET CERTIFIED MANAGEMENT SYSTEM
qualityaustria SYSTEM CERTIFIED
ISO 9001:2015 No.07728/0
ISO 14001:2015 No.00997/0
ISO 45001:2018 No.01121/0

PRIUS P

Motor driven plunger metering pump

Data Sheet

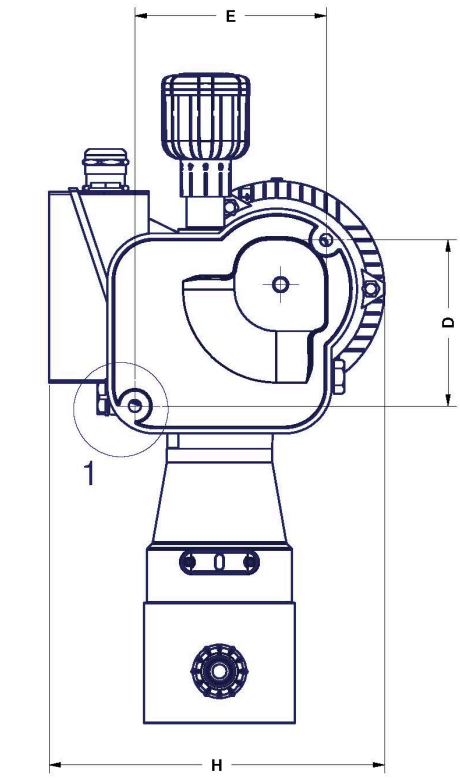

	Ø14	Ø25	Ø32	Ø40	Ø50	Ø63	Ø63 07/508
A	410	410	410	412	412	420	420
B	394	394	394	394	394	394	394
C	157	157	157	157	157	157	157
D	108.60	108.60	108.60	108.60	108.60	108.60	108.60
E	125.20	125.20	125.20	125.20	125.20	125.20	125.20
F	356.70	356.70	356.70	387.20	387.20	387.20	481.20
G	163.50	163.50	163.50	163.50	163.50	163.50	163.50
H	193.70	193.70	193.70	219.50	219.50	219.50	237
I	177.20	177.20	177.20	177.20	177.20	177.20	229.20
L	Ø8.00	Ø8.00	Ø8.00	Ø8.00	Ø8.00	Ø8.00	Ø8.00
M	112.50	112.50	112.50	112.50	112.50	112.50	112.50

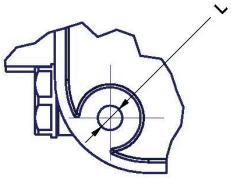

Dettaglio 1 (2 : 3)

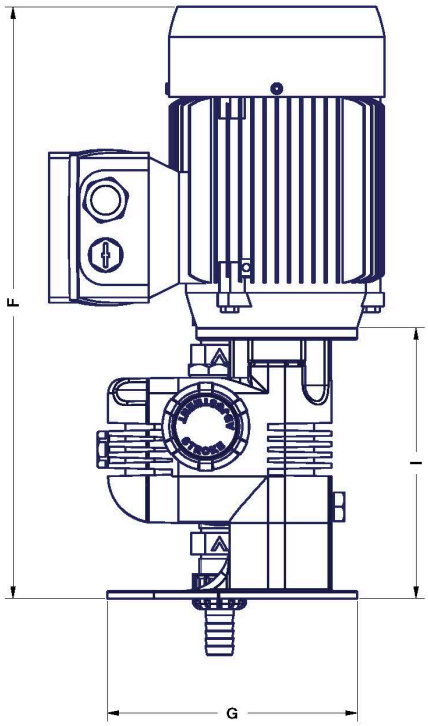

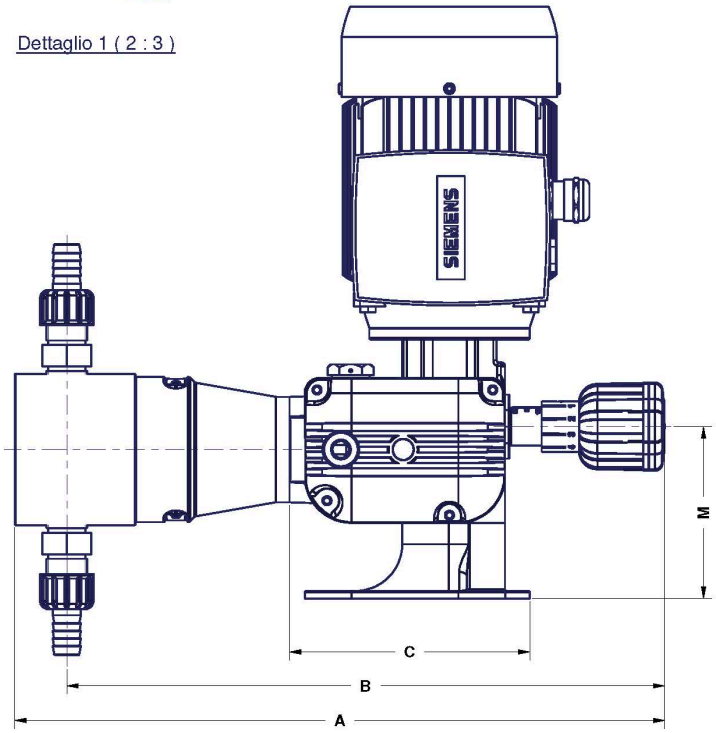

Via Donatori di Sangue, 1 - 02100 Rieti (Italy)
+39 074622841 | emecpumps.com

Specifications subject to change without notice | R2025

emec
SIMPLE AS WATER

IQNET CERTIFIED MANAGEMENT SYSTEM
qualityaustria
SYSTEM CERTIFIED
ISO 9001:2015 No.07728/0
ISO 14001:2015 No.00997/0
ISO 45001:2018 No.01121/0