SEFL - SEFLS - SEFLMS

SEFL

SEFLS

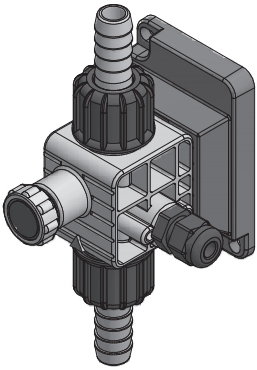

SEFLS 12x18/13x16

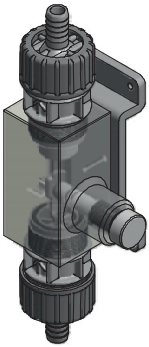

SEFLS PMMA
(PRIUS >240l/h)

FLOW SENSORS

OPERATING INSTRUCTIONS

EN

This operating instructions contains safety information that if ignored can endanger life or result in serious injury.

The information contained in this manual may contain inaccuracies or typographical errors.
The information contained in this publication is subject to change at any time without notice.

Version: R2-03-20

THIS EQUIPMENT IS FOR DRINKING WATER TREATMENT.

Use of this pump with radioactive chemicals is forbidden!

When using this equipment with aggressive chemicals observe the regulations concerning the transport and storage of aggressive fluids!

When installing always observe national regulations!
Prima di ogni intervento di manutenzione:

- **read chemical safety datasheet;**
- **wear PPE (personal protective equipment) when handling hazardous or unknown chemicals;**
- **discharge the liquid end before servicing the pump:**
- **empty and rinse the liquid end before work on the equipment which has been used with hazardous or unknown chemicals.**

This equipment complies to D.M. 7 February 2012 n.25 – D.M. 6 April 2004 n. 174 – Regulation EU 10/2011- Equipment intended to come into contact with food.

INTRODUCTION

SEFL is a flow sensor device made for checking if the connected dosing pump is working properly by checking if a liquid is flowing through the pump's head. It has a control knob to regulate sensibility for every kind of pump.

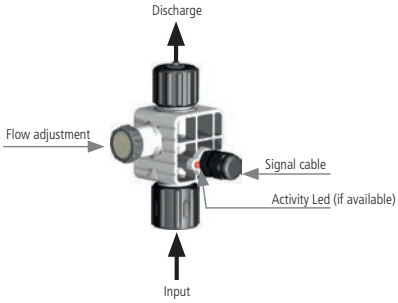

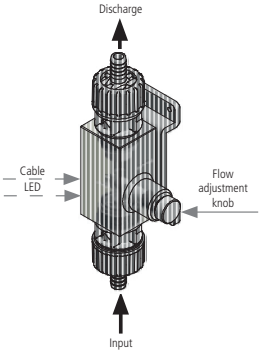

- PVDF or PP or PMMA body
- N.C. contact
- Adjustable sensitivity
- FKM B or EPDM O-ring
- Max 45°C
- Activity LED on board

MODELS

	BODY	FITTINGS	VALVE	O-RING	CA-BLE	Bracket and hose fixing kit	Temp./ Pressure
SEFL/D	PVDF	1/2" - 3/8"	PVDF	EPDM	PE		45°C/25 bar
SEFL/V	PVDF	1/2" - 3/8"	PVDF	FKM B	PE		45°C/25 bar
SEFLS/D	PVDF	1/2"	PVDF	EPDM	PE	•	45°C/25 bar
SEFLS/V	PVDF	1/2"	PVDF	FKM B	PE	•	45°C/25 bar
SEFLP/D	PP	1/2" - 3/8"	PP	EPDM	PE		45°C/25 bar
SEFLP/V	PP	1/2" - 3/8"	PP	FKM B	PE		45°C/25 bar
SEFLPS/D	PP	1/2"	PP	EPDM	PE	•	45°C/25 bar
SEFLPS/V	PP	1/2"	PP	FKM B	PE	•	45°C/25 bar
SEFLMS PRIUS 160/500L	PMMA	1 1/2"	PVDF / PP	FP / EP	PVC		25°C/7 bar

	BODY	O-Ring	FITTINGS	Temp./ Pressure	Bracket and hose fixing kit
SEFLS/D/PMMA [2]	PMMA	EPDM	1 1/2" - 18	40°C/10 bar	•
SEFLS/V/PMMA [2]	PMMA	FKM B	1 1/2" - 18	40°C/10 bar	•

[2] Models for PRIUS pumps with TM (models with capacity over 240 l/h) and UM pump heads.

INSTALLATION

1. Install SEFL connecting it to the pump head discharge connection. Take out the discharge connection tube nut and screw the SEFL connection onto the discharge.

2. Install the discharge hose on the discharge point of SEFL (top) locking it tight.

3. Carry out the electrical wiring connecting the SEFL to the MF pump or any other pump with sefl input. Working mode is a continuous ON/OFF contact.

4. Set flow adjustment so that activity led blinks every time the pump makes one stroke.

SEFL
(fittings for installation on the pump)

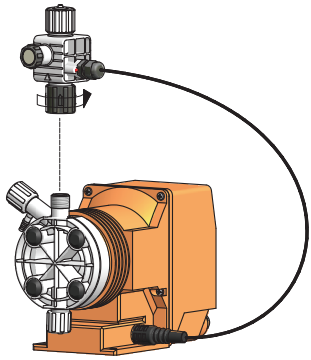

SEFL
(bracket version. Hose fitting kit)

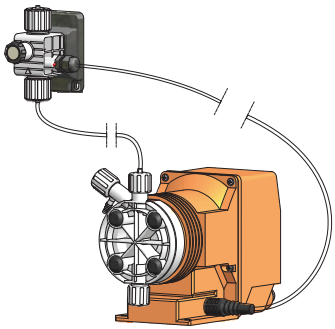

INSTALLATION ON AMS AND CMS PUMP SERIES

⚠ ATTENTION

On CMS and AMS pump series flow sensor SEFL must be installed at 50 cm minimum distance from the pump to avoid interference with the solenoid.

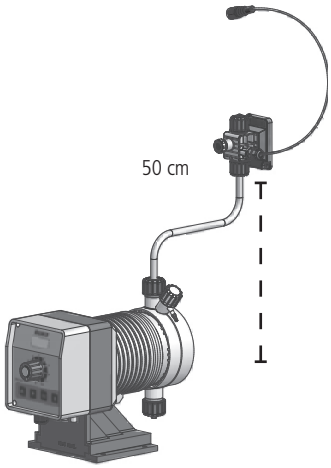

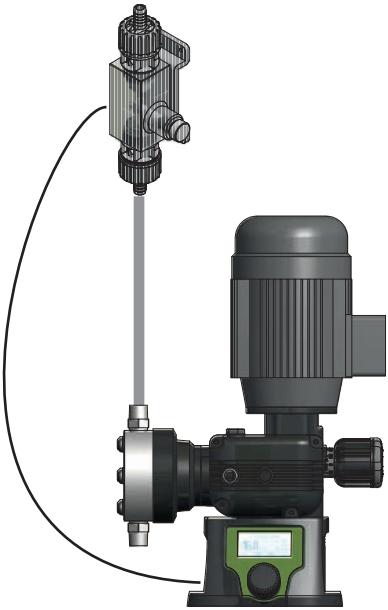

DIMENSIONS

Dimensions: mm - [inches]

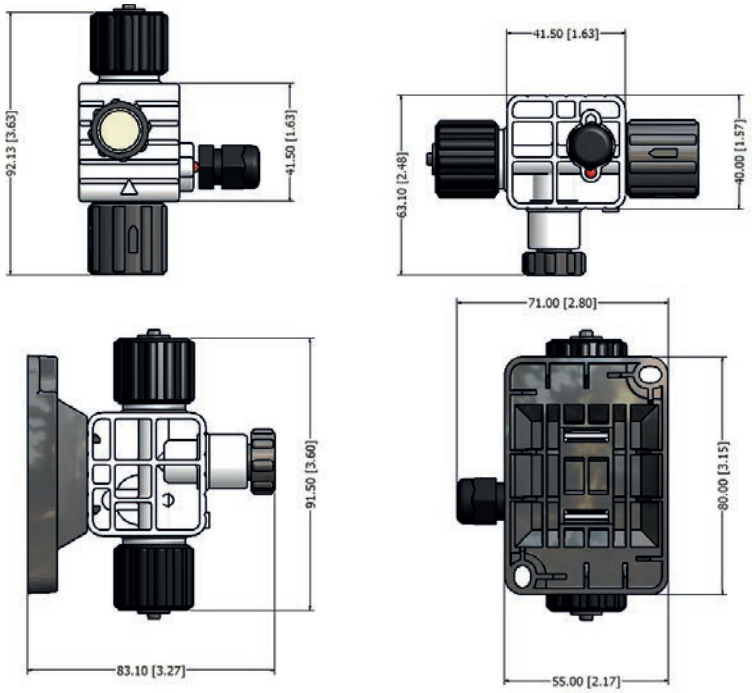

OPTION: PMMA BRACKET FOR KMS OR AMS MOUNTING.

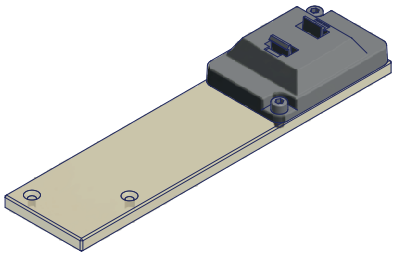

SEFLS PRIUS

Dimensioni: mm - [inches]

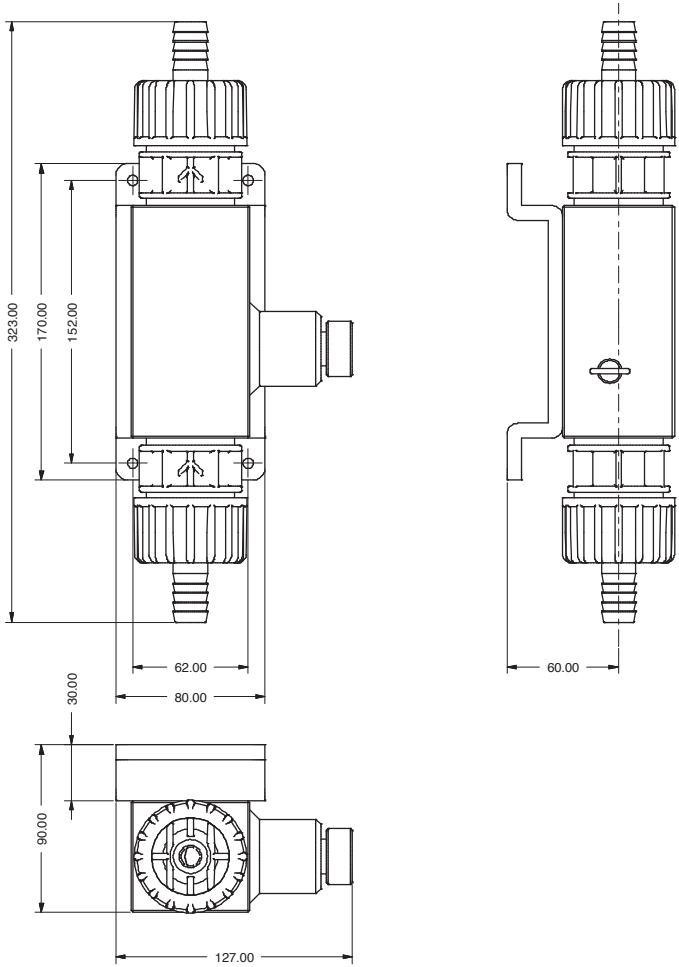

SEFLMS PRIUS

Dimensioni: mm - [inches]

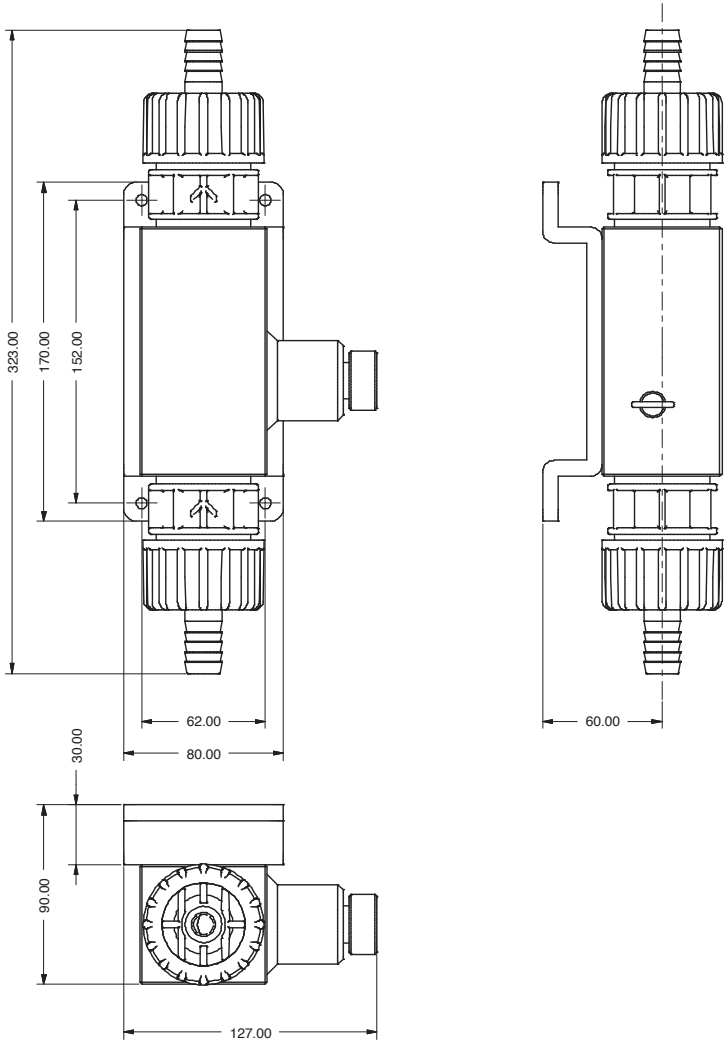

Disposal of end-of-life equipment by users

This symbol warns you not to dispose of the product with normal waste. Respect human health and the environment by giving the discarded equipment to a designated collection center for the recycling of electronic and electrical equipment. For more information visit the online site.

When dismantling a pump please separate material types and send them according to local recycling disposal requirements. We appreciate your efforts in supporting your local Recycle Environmental Program. Working together we'll form an active union to assure the world's invaluable resources are conserved.