MIXERS

Data Sheet

FEATURES

- The mixer is used with size tank from 120 l to 1000 l.
- The gear box (lubrification free) is coupled to the tank fixing flange.
- The main axis is made in stainless steel and covered in PVC.
- The seal against chemical vapour is a Fluorocarbon rotary seal inserted between the flange and the PVC cover of the shaft. This protects the gear box and the motor from chemical vapour.

EMEC supplies MIX with three different speeds: 65 RPM, 200 RPM and 1400 RPM.

The MIX shaft length can be customized to fit different size tanks.

SPECIFICATIONS

MODELS	Rated power (kW)	Rotation speed (rpm) [1]	Height (mm) [1]	Tank	Impeller	Impeller diameter (mm)	Weight (Kg)
MIX8N-MON	0,09	65 or 200	630	CNT PD 120	3 blades	150	7.00
			730	CNT PD 250			
MIX8N-TRI	0,09	65 or 200	630	CNT PD 120	3 blades	150	6.55
			730	CNT PD 250			
MIXV8N-MON	0,09	1400	630	CNT PD 120	marine	70	5.50
			730	CNT PD 250			
MIXV8N-TRI	0,09	1400	630	CNT PD 120	marine	70	5.30
			730	CNT PD 250			
MIX4N-MON	0,18	65 or 200 or 400	730	CNT PD 250	4 blades	150	11.00
			980	CNT PD 500			
			1100	CNT PD 1000			
MIX4N-TRI	0,18	65 or 200 or 400	730	CNT PD 250	4 blades	150	9.50
			980	CNT PD 500			
			1100	CNT PD 1000			
MIXV4N-MON	0,18	1400	730	CNT PD 250	marine	90	8.00
			980	CNT PD 500			
MIXV4N-TRI	0,18	1400	730	CNT PD 250	marine	90	8.00
			980	CNT PD 500			
MIXV2N-MON	0,37	1400	730	CNT PD 250	marine	90	12.00
			980	CNT PD 500			
			1100	CNT PD 1000			
MIXV2N-TRI	0,37	1400	730	CNT PD 250	marine	90	10.50
			980	CNT PD 500			
			1100	CNT PD 1000			
MIX2N-MON	0,37	65 or 200 or 400	1100	CNT PD 1000	4 blades	200	16.00
MIX2N-TRI	0,37	65 or 200 or 400	1100	CNT PD 1000	4 blades	200	14.50

DIMENSION (mm)

MIX8N-MON
MIX8N-TRI

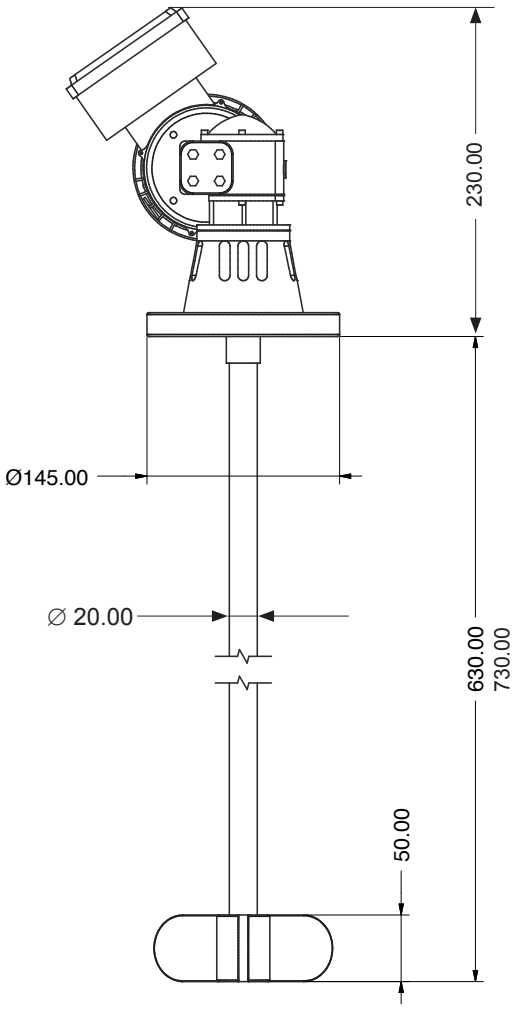

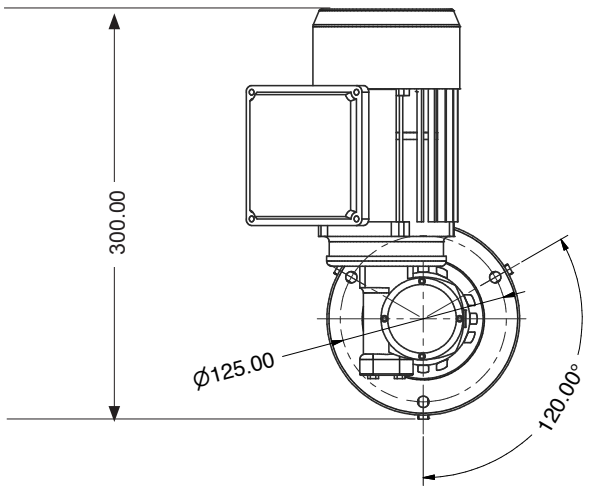

DIMENSION (mm)

MIXV8N-MON
MIXV8N-TRI

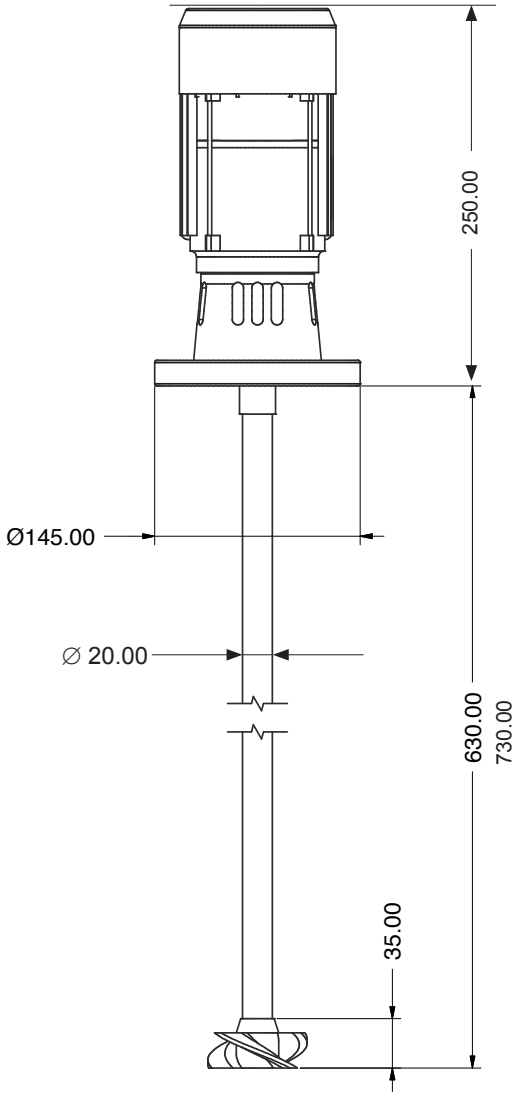

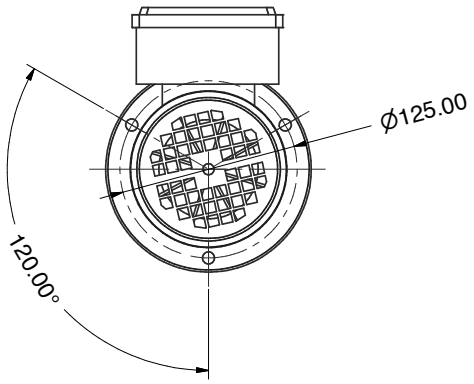

DIMENSION (mm)

MIXV4N-MON
MIXV4N-TRI

MIXV2N-MON
MIXV2N-TRI

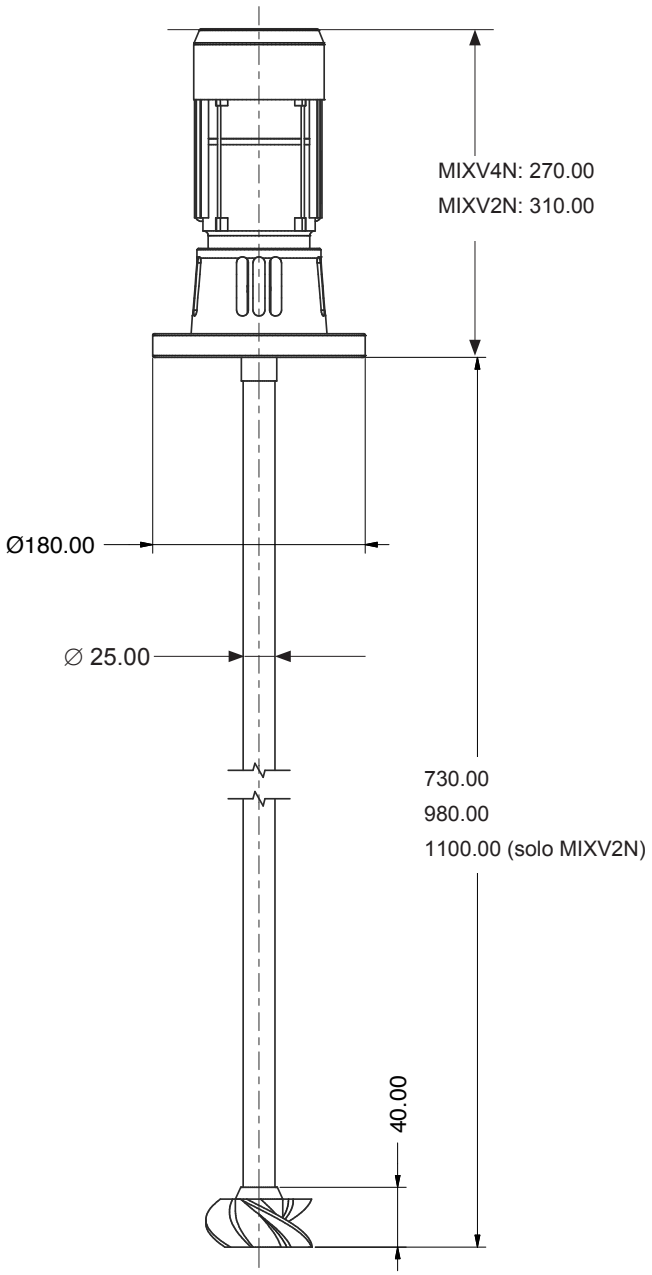

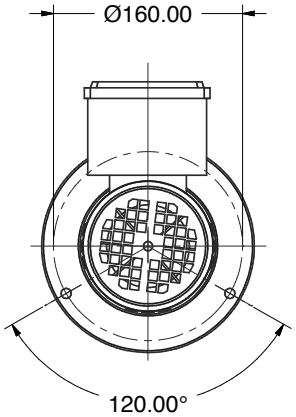

Via Donatori di Sangue, 1 - 02100 Rieti (Italy)
+39 074622841 | emecpumps.com

Specifications subject to change without notice | R2025

emec SIMPLE AS WATER

IQNET CERTIFIED MANAGEMENT SYSTEM
qualityaustria SYSTEM CERTIFIED
ISO 9001:2015 No.07728/0
ISO 14001:2015 No.00997/0
ISO 45001:2018 No.01121/0

DIMENSION (mm)

MIX2N-MON
MIX2N-TRI
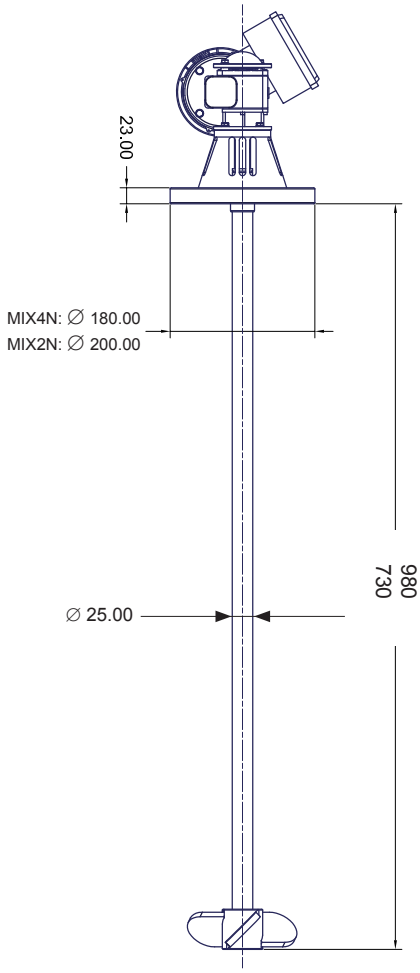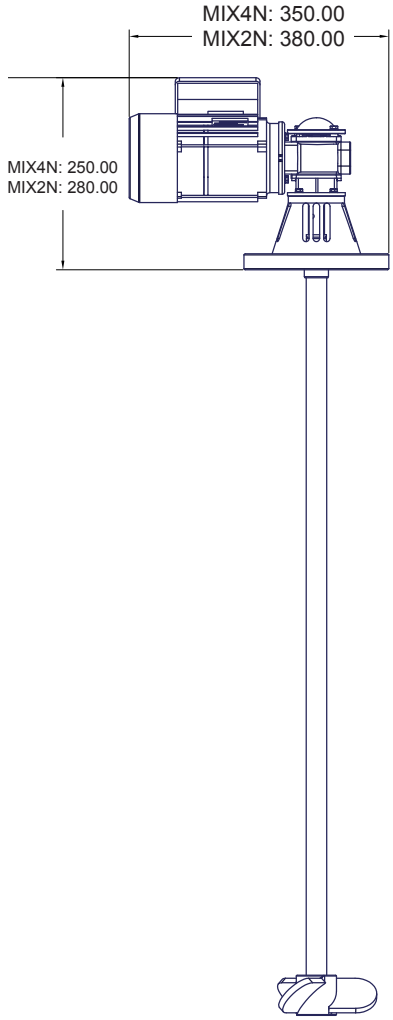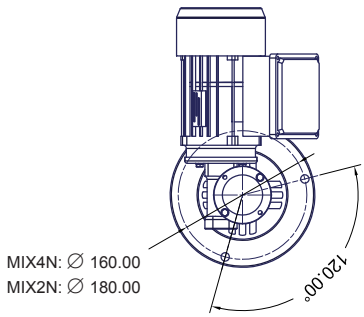
MIX4N-MON
MIX4N-TRI