MF - Multifunction Valve

Data Sheet

FEATURES

- Connections for all different EMEC sizes
- Pressure range adjustable from 1 to 5 bar for pressure valve operating mode
- Pressure range adjustable from 3 to 18 bar for safety valve operating mode
- Discharge connection 3/8" 4x6
- O-ring in EPDM or FKM B or NBR
- PVDF or PP body
- PTFE membrane, oring sealed.
- Working parameters: max 15bar / 20l/h

Multifunction valve (pressure, safety, anti-syphon).

Selecionable working pressure.

Easy-to-use knobs, with stop position.

MF models
- MFKT/V
- MFKT/D

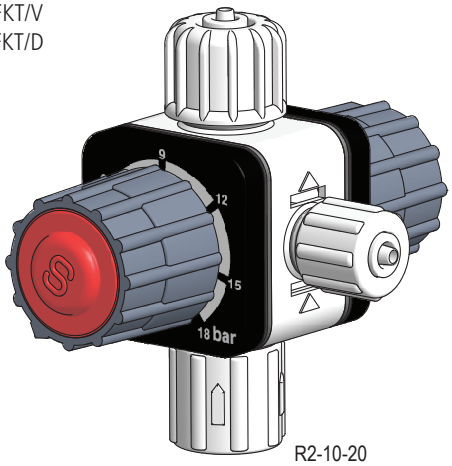

R2-10-20

MF models with bracket:
- MFKTS/V
- MFKTS/D

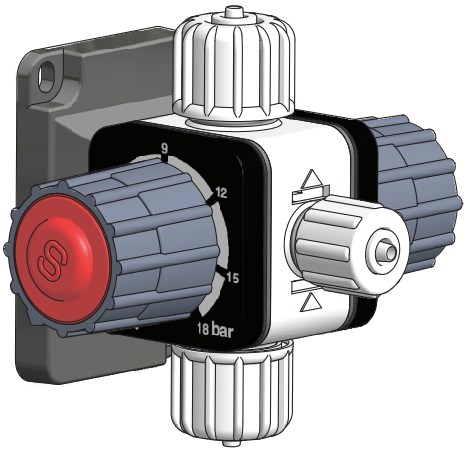

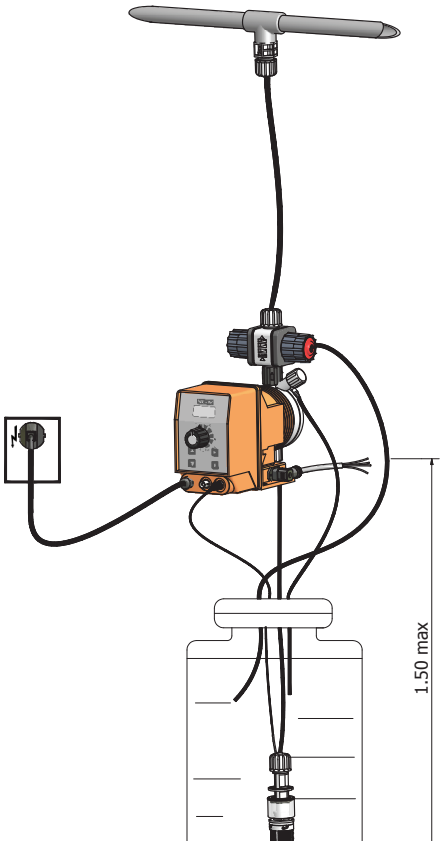

PRESSURE valve operating mode

Pressure valve operating mode keeps always closed the valve until is reached a specific pressure value to the input.

SAFETY valve operating mode

Safety-valve operating mode activates product discharge when is over-reached a specific pressure value (max 18bar).

ANTI-SYPHON valve operating mode

Anti-syphon operating mode avoid that dosing product goes through the injection valve when the pump is not dosing because a negative pressure has been produced on the injection valve.

Via Donatori di Sangue, 1 - 02100 Rieti (Italy)
+39 074622841 | emecpumps.com

Specifications subject to change without notice | R2025

emec SIMPLE AS WATER

IQNET CERTIFIED MANAGEMENT SYSTEM
qualityaustria SYSTEM CERTIFIED
ISO 9001:2015 No.07728/0
ISO 14001:2015 No.00997/0
ISO 45001:2018 No.01121/0

DIMENSIONS

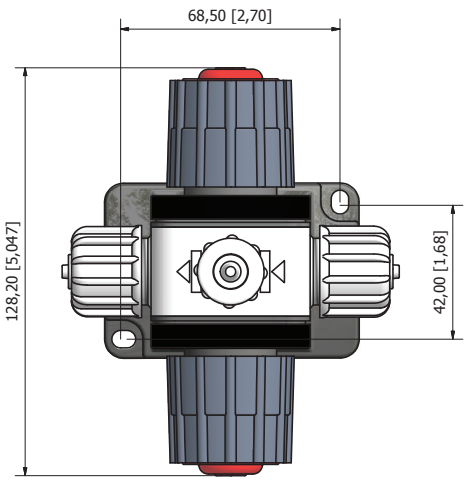

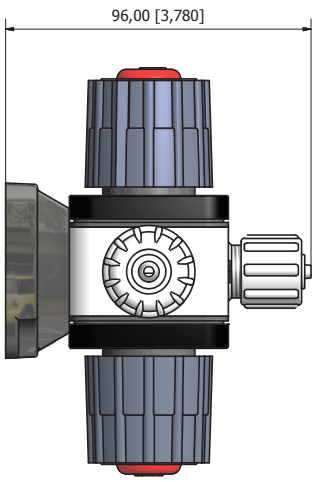

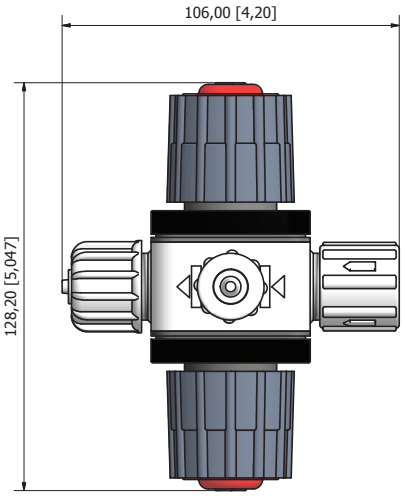

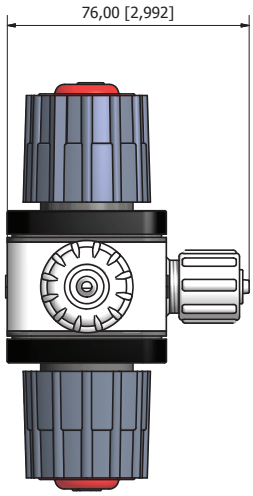

mm [inches]

MODELS	Material	O-Ring	Fittings	Discharge hose fitting	Safety valve working range	Pressure valve working range	Bracket
MFKT/V	PP / PVDF	FKM B	1/2", 3/8"	4x6	3-18 bar	1-5 bar	
MFKTS/V	PP / PVDF	FKM B	1/2", 3/8"	4x6	3-18 bar	1-5 bar	•
MFKT/D	PP / PVDF	EPDM	1/2", 3/8"	4x6	3-18 bar	1-5 bar	
MFKTS/D	PP / PVDF	EPDM	1/2", 3/8"	4x6	3-18 bar	1-5 bar	•

Via Donatori di Sangue, 1 - 02100 Rieti (Italy)
+39 074622841 | emecpumps.com

Specifications subject to change without notice | R2025

emec SIMPLE AS WATER

IQNET CERTIFIED MANAGEMENT SYSTEM

qualityaustria SYSTEM CERTIFIED
ISO 9001:2015 No.07728/0
ISO 14001:2015 No.00997/0
ISO 45001:2018 No.01121/0