emec®
SIMPLE AS WATER

# POOL CATALOGUE

## SOLUTIONS FOR WATER TREATMENT

emec®

SIMPLE AS WATER

# WATER TREATMENT SYSTEMS

# EMEC

## SYSTEMS FOR SWIMMING POOLS

## Flexibility and innovation

Flexibility and innovation are fundamental to us.
Since 1982, we have been designing and producing reliable, cutting-edge instruments for water treatment and chemicals dosing. As a company, we are open to change and, just like water, we have branched out over time, spreading out into wide-ranging areas, from industrial water treatment to potabilization to water purification, from food and beverage industry to swimming pools.

**OUR VALUE**
Being at the cutting edge means constant study. Our R&D and design departments are where our heart beats. Extremely high-profile engineers and technicians are committed to developing software and designing hardware, but also to studying and evaluating hydraulic and mechanical components.
The customers and their satisfaction have always been at the heart of what we do, so we pay constant attention to the quality of our production processes, through a constantly updated and cutting-edge range of industrial machines.

**QUALITY AND SAFETY, FIRST OF ALL**
We are entirely responsible for every stage of the process, from invention to delivery. Our products undergo up to 10 quality checks and are tested four times before reaching the customer. The quality management system of our production process is ISO 9001 certified and has customer satisfaction as its ultimate goal, as well as continuous improvement of company performance.
Customers satisfaction comes hand-in-hand with ensuring safety for them, their operators and final users. Our dosing pumps and controllers are UL certified to guarantee full compliance with general requirements for safety of use, while ***NSF*** certifications guarantee that our pumps do not release hazardous pollutants into the water and therefore are fully safe for use in contact with drinking water, for example in the food production industry, or at recreational facilities like swimming pools and spas.

**COMPETENCE AND PROFESSIONALISM**
Extremely high performance, top quality and high technology are our greatest assets. But there is more. Every day, we safeguard something equally important: human capital. Our co-workers are the best professionals on the market; the most expert and competent people.
For this reason our organizational model is designed to manage their safety and health in an organic and systematic way, respecting the international standard ***BS OHSAS 18001***.

**ENVIRONMENTAL SUSTAINABILITY**
The adoption of an environmental management system compliant with the international standard ***ISO 14001*** arises from the awareness of the imprint that human activities leave on the planet. Our environmental protection management system allows us to minimize the impact of production processes (with emissions well below the prescribed limits), of products and of raw materials used (with the recycling of most of the waste materials), also thanks to an energy saving system that covers all company spaces and to the use of renewable energy sources.

MADE IN ITALY

**100% MADE IN ITALY**
All our products are 100% Made in Italy.

5 YEARS WARRANTY

**WARRANTY**
5 years warranty for our dosing pumps and controllrers.

CERTIFIED IQNet MANAGEMENT SYSTEM

NSF
Certified to NSF/ANSI/CAN 50

c UL us

qualityaustria SYSTEM CERTIFIED
ISO 9001:2015 No.20006/0
ISO 14001:2015 No.03528/0
BS OHSAS 18001:2007 No.02032/0

# POOL CATALOGUE

## Smart systems

**POOLBRAVO** 8

## Dosing pumps

**STEPPER PERISTALTIC DOSING PUMPS**

*WNPHXX Series* 10
*VELON Series* 14
*Prisma* 16

**ELECTROMAGNETIC DOSING PUMPS**

*WDPHXX Series* 18

**MULTI-FUNCTION DOSING PUMPS**

*AMS FM Series* 28
*KMS FM Series* 29
*TMS FM Series* 30
*VMS FM Series* 32

**CONSTANT DOSING PUMPS**

*AMS CL PLUS Series* 35
*K CL PLUS Series* 36
*T CL Series* 37
*V CL Series* 38
*VCLD Series* 40

**PROPORTIONAL DOSING PUMPS WITH MEASUREMENT**

*TMS ph and Rh Series* 43
*VMS PO e $H_2O_2$ Series* 44

## Digital controllers

**MULTIPARAMETER DIGITAL CONTROLLERS**

*CENTURIO POOL* 46

*LDPHXX Series* 48

**SINGLE MULTIPARAMETER DIGITAL CONTROLLERS**

*LDS* 50

*JA PRO* 52

**MODEM AND EXTERNAL MODULES FOR COMMUNICATION**

*Connection Example* 54

## All-in-one control and dosing solutions

**ALL-IN-ONE SYSTEMS** 58

**ALL-IN-ONE SYSTEMS**
*Digital system with open amperometric cell ECL6* 62

**ALL-IN-ONE SYSTEMS**
*Digital system with closed amperometric cell SCL3S/20 and PEF1* 64

**ADVANCED ALL-IN-ONE SYSTEMS** 66

## Accessories

**LIST OF COMPATIBLE ACCESSORIES** 69

## Remote measurement and control

**MINBUS** 74

**MY EMEC** 78

# SWIMMING POOL MADE SMART

POOLBRAVO

# POOLBRAVO

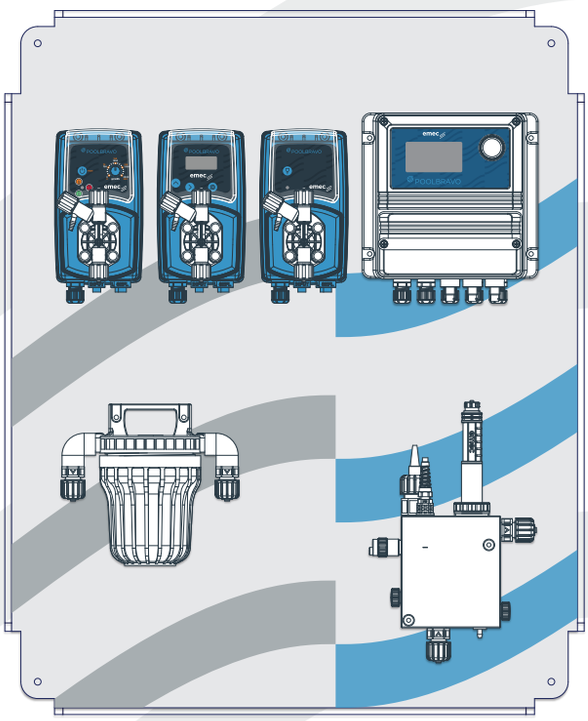

A multi-colored LED light is installed on PEF probe-holder in order to quickly signal, through an opening on the cover, specific operation statuses or possible alarms according to the color of the light.

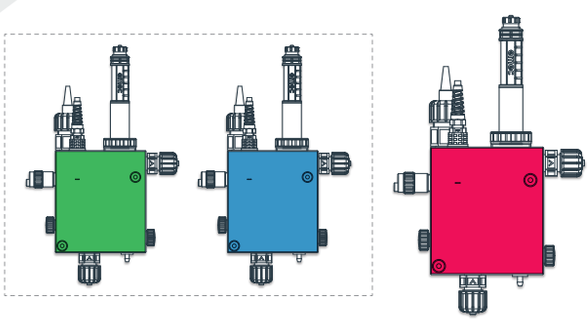

***GREEN*** *or* ***BLUE*** *(depending on the version) means the device is correctly functioning.*

***RED*** *means the device is in an alarm status.*

The POOLBRAVO integrated system has been designed to offer an all-in-one solution that is easy to use and highly accurate, able to minimize the need for manual intervention on swimming pool water and to reduce the consumption of chemical products. An elegant cover makes POOL BRAVO suitable for any installation context and, besides safeguarding from accidental liquid loss, preserves at the same time the cleanliness of the inner components and their integrity.

POOLBRAVO is a turnkey product available in different configurations to immediately and easily manage the main measurement parameters concerning the treatment of swimming pool water, thus optimizing the dosing and consumption of the chemical products necessary for the compliance with chemical-physical water requirements.

**COMPLETE CONTROL**

The LD multiple reading digital system inside POOLBRAVO gives you the complete control over the measurement parameters and over the dosing of chemicals, besides being easy to use thanks to the LCD display and the ENCODER control knob that makes simple to browse through its configuration menus. Complete control also comes from the wide range of probes that can measures hydrogen peroxide, oxygen, bromine, chlorine, ozone, peracetic acid and chlorine dioxide. EMEC V series dosing pumps complete POOL BRAVO dosing system.

**REMOTE CONTROL**

EMEC exclusive online system ERMES enables you to remotely control and regulate POOLBRAVO from any smartphone or PC, so to keep the status of your swimming pool always under control, wherever you are.

# STEPPER PERISTALTIC DOSING PUMPS

## WNPHXX:PRECISE, RELIABLE, SILENT.

WN

# WNPHXX

WNPHxx Standard Pump

The **WNPHxx** series has been developed by EMEC to offer a complete and user-friendly solution for swimming pool water treatment and for all those installations where precise, reliable and silent operation is needed, such as in wellness and spa environments.

The **WNPHxx** series products are two-channel and multi-parameter
with a temperature readout.

Distinctive features also include:
- optimised dosing capacity as result of its electronically controlled stepper motor. This allows the rotation speed to be varied in real time and therefore also the dosage, in a range of from 1% to 100%;
- ability to detect and manage electromechanical faults.

The large backlit LCD screen and encoder knob makes data clearly visible and the menus easy to navigate so that operating modes can be quickly programmed with the relative alarm settings and different outputs. The **WNPHxx** can also be remote controlled using the NIMBUS platform and the My Emec app.

The **WNPHxx** series is the compact all-in-one solution for maximum precision that also includes a control instrument and two peristaltic stepper dosing pumps in one product.

# Stepper metering pumps

WNPHxx Series

## WNPHxx

## PERFORMANCE

TUBO BIOCOMPATIBILE A LUNGA DURATA

| Hose | Pressure | | Capacity range | | RPM range |
|---|---|---|---|---|---|
| | *bar* | *PSI* | *l/hr* | *gal/hr* | *rpm* |
| **Ø 1.6x1.6** | **2** | **36.2** | **0.018 - 1.8** | **0.0047 - 0.47** | **1 - 100** |
| **Ø 4.8x1.6** | **2** | **36.2** | **0.12 - 12** | **0.0317 - 3.17** | **1 - 100** |

## PERFORMANCE

- No. 2 high-precision stepper motors
- Precision through peristaltic dosing
- Great flexibility of use (1 m3 - 250 m3)
- Low maintenance requirements (longlasting biocompatibile peristaltic tube)
- Scheduled maintenance alerts
- Advanced operator safety (inverters and low-permeability materials)
- New automatic dosage adjustment system
- Built-in Wi-Fi connectivity
- Remote control via NIMBUS/ My EMEC App

## BASIC MODEL ACCESSORIES

- 2 PVDF injection valves (0.3 bar)
- 2 PVDF level probes
- 2 PVDF foot strainers
- 8 meters of suction hose (flexible PVC)
- 2 long-lasting biocompatible tubes 4.8x1.6 (standard equipment)

# VELON Series

## Peristaltic dosing pumps with stepper motor

VELON

WIFI

NIMBUS
DIGITAL SERVICES

APP **MY EMEC**

ONLINE STATS

CUSTOMIZABLE

**MAX FLOW RATE**

12 **l/h**

**MAX PRESSURE**

2 **bar**

**POWER SUPPLY**

12 | 24 **VDC**

24 **VAC**

100-240 **VAC**

**VELON is a state-of-the-art compact peristaltic dosing pump, equipped with a high-precision, electronically-controlled multifunction stepper motor that guarantees constant and regular chemical product dosing, even in demanding working conditions and with load variations. Designed to offer a complete, easy-to-use solution in all installation contexts that require precise, reliable, quiet and safe operation.**

### ACCESSORIES

- 1 PVDF injection valve (0.3 bar)
- 1 PVDF foot filter with level probe
- 4 m suction tubing (flexible PVC)
- 1 long-life biocompatible tubing, 4.8 × 1.6 mm (standard supply)
- 1 long-life biocompatible tubing, 1.6 × 1.6 mm (included accessory)

## FEATURES COMMON TO THE ENTIRE SERIES

| Microprocessor | Pressure (bar - psi) | RPM Range (rpm) | Protection | Power Supply | installation Class |
|---|---|---|---|---|---|
| Next-Generation, High-Performance | 2 (29) | da 1 a 100 | IP65 | 24 \| 100–240 VAC, 12VDC, 24VDC | II |

| Flow Rate Range (l/h – gal/h) (Ø1,6x1,6) | Flow Rate Range (l/h – gal/h) (Ø4,8x1,6) | Operating Temperature | Additive Temperature | Manufacturing Materials | Remote Control |
|---|---|---|---|---|---|
| 0,018 – 1,8 l/h<br>0,0047 – 0,47 gal/h | 0,12 – 12 l/h<br>0,0317 – 3,17 gal/h | 10 – 45 °C<br>55 – 113 °F | 0 – 50 °C<br>32 – 122 °F | PC/ABS, PVDF, POM, TPV | Web (NIMBUS) e App (MyEmec) |

# AVAILABLE VERSIONS

DIGITAL

ANALOGIC

## VELON MF

## VELON PO

## VELON PM

## VELON CL

## SPECIFIC MODEL FEATURES

| | Velon MF | Velon PO | Velon CL | Velon PM |
|---|---|---|---|---|
| DESCRIPTION | Multifunction pump with extensive dosing modes and digital management, including remote control | Versatile pump with proportional adjustment and remote control | Essential, practical pump for constant dosing with manual adjustment via potentiometer | Pump with MODBUS RTU integration, ideal for automated systems |
| INTER./CONT. | Backlit RGB LCD display, encoder, remote management via app/web | Backlit LCD display, encoder, remote management via app/web | Front potentiometer, LED, ON/OFF button | MODBUS RTU, LED, tasto ON/OFF |
| WORKING MODE | Constant, CC/Pulse, PPM, %, MLQ, Batch, Volt, mA, Pulse, Weekly Program, Ext Constant | Proportional, Autodosing pH and/or Redox | Constant | External Control |
| MAINTENANCE | Scheduled maintenance via activity meters | Scheduled maintenance via activity meters | Scheduled maintenance via activity meters | Scheduled maintenance via activity meters |
| INPUT | MODBUS RTU, Multi-function, Level | MODBUS RTU, Standby, Level, Serial Probe | Level | MODBUS RTU, Level |
| OUTPUT | Alarm (optional) | Allarm (optional) | Allarm (optional) | Allarm (optional) |
| CONNECTIVITY | Wi-Fi & Bluetooth | Wi-Fi & Bluetooth | - | - |
| FW UPDATE | OTA | OTA | - | - |

# PRISMA Series

## Stepper motor dosing pumps

PRISMA

APP **MY EMEC**

NIMBUS

DIGITAL SERVICES

**MAX FLOW RATE**

80 **l/h**

**MAX PRESSURE**

25 **bar**

**POWER SUPPLY**

12-24 **VDC**

24 **VAC**

100-240 **VAC**

**VENTING**

*Manual*

### FEATURES

- Pump head available in PVDF, PP, SS and PMMA
- Accessories available in PVDF and PP
- Stepper motor
- Multifunctional software
- High-strength PTFE diaphragm
- Horizontal mounting
- RGB backlit LCD display

### STEPPER MOTOR

SLOW MODE | TURNDOWN RATIO 1:4800 | MULTI-COLOUR DISPLAY | MULTIFUNCTION

### WORKING MODES

CONSTANT | MODBUS | NIMBUS | CONSTANT WITH EXTERNAL INPUT | PPM | % | mA | PAUSE-WORK | WEEKLY TIMER | MLQ | CC/PULSE | VOLT | BATCH EXTERNAL/MANUAL

### PUMP HEADS

**PVDF**

**PP**

**SS** AISI316L

**PMMA**

### ACCESSORIES

**Foot filter with level probe**

**Injection valve 1/2" or 3/4"**

**PRISMA** stepper motor-driven dosing pump has been designed by EMEC to be the best solution for offering high-accuracy metering and extreme reliability.

Thanks to the new stepper motor and to the Multifunction software, **PRISMA** dosing pumps offer complete control over dosing speeds and working modes as well as great flexibility, meeting even extremely complex application needs.

## INFO COLOR SCREEN

REAL-TIME FLOW

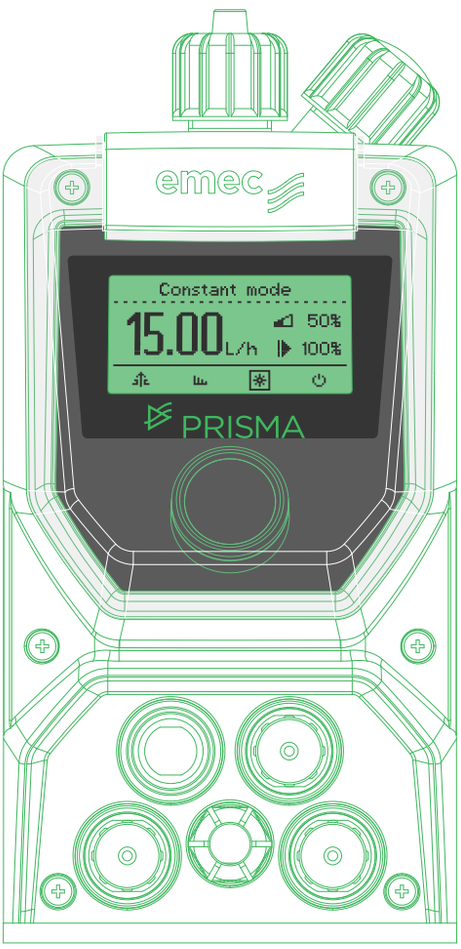


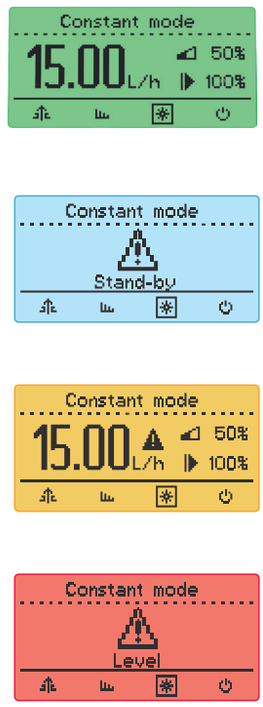


DOSING
**Green**

STAND-BY
**White**

WARNING
**Yellow**

ALARM
**Red**

**PRISMA** dosing pumps feature the Encoder control knob for quickly browsing through the menus and a large display to easily regulate and control the working parameters.

By changing background colors the backlight display can also signal different working status.

### TURNDOWN

**PRISMA** stepper motor-driven pumps give you the most accurate control over the stroke speed, providing an outstanding turndown ratio of up to **4800:1**.

It means **PRISMA** can split up the dosing process into a maximum of **4800 steps** in order to offer the most homogeneous and precise distribution of the product to dose according to the required application.

### SLOW MODE

Extreme versatility of **PRISMA** dosing pumps is also due to **Slow Mode** function.

With Slow Mode enabled you can reduce the suction speed from **100** to **30%** of the normal speed, making easier and more reliable the priming and the dosing even when you have to work with particularly viscous liquids.

# ELECTROMAGNETIC DOSING PUMPS

## WD: PRECISE, RELIABLE, NOISELESS

WD

# WDPHXX

WDPHxx series has been created by EMEC to provide a complete and small-sized solution for swimming pool water treatment. WDPHXX systems are all-in-one, compact instruments which integrate two dosing pumps and a control instrument into a single, easy to use, highly precise system.
WDPHXX systems can measure pH and another parameter that depends on the chosen model: chlorine, bromine, Redox, antialgae, flocculant, active oxygen. A wide range of products for the highest flexibility.

**COMPLETE CONTROL, EVEN REMOTELY**

A clear reading of data and an easy browsing through function menus are made simple by a wide backlit LCD display and by the “Encoder” control knob, in order to quickly program the working modes you need, to set alarms and to manage outputs.
You can also remotely control WDPHXX systems from any smartphone or PC with EMEC exclusive online system NIMBUS, so to keep the status of your plant always under control wherever you are.

# All-in-one dosing pumps

*Multiparameter measurement and control*

# WDPHCL

*pH & Chlorine*

**WDPHCL / WDPHCL PER**
Swimming pool controller with 2 dosing pumps for acid (pH) and chlorine (Cl2). Liquid ends and pump head made of PVDF.

Wheel control system

Alarm output
RS485 output

Measurement range:
from 0 to 14 pH
from 0 to 10 mg/l $Cl_2$

| PRESSURE | | FLOW | |
|---|---|---|---|
| 7 | **bar** | 6 | **l/h** |
| 5 | **bar** | 1 | **l/h** |
| 3 | **bar** | 10 | **l/h** |

# WDPHRH

*pH & ORP*

**WDPHRH**
Swimming pool controller, 2 dosing pumps for acid (pH) and disinfectant (ORP).
Liquid ends and pump head made of PVDF.

Wheel control system

Alarm output
RS485 output

Measurement range:
from 0 to 14 pH
from 0 to 1000 mV

| PRESSURE | | FLOW | |
|---|---|---|---|
| 7 | **bar** | 6 | **l/h** |
| 5 | **bar** | 1 | **l/h** |
| 3 | **bar** | 10 | **l/h** |

# All-in-one dosing pumps

*Multiparameter measurement and control*

# WDPHCLS

*pH and Chlorine/Bromine*

**WDPHCLS**
Proportional controller with 1 dosing pump driven by internal built-in pH and Chlorine/Bromine meter. Output: (SCHUKO plug) for sterilisers or Cl/Br feeders. Liquid ends and pump head made of PVDF.

Measurement range:
from 0 to 14 pH
from 0 to 10 mg/l $Cl_2$ / $Br_2$

*Option: free of voltage EV contact.*

| PRESSURE | | FLOW | |
|---|---|---|---|
| 7 | bar | 6 | l/h |
| 5 | bar | 1 | l/h |
| 3 | bar | 10 | l/h |

| EV OUTPUT | | MAX LOAD | |
|---|---|---|---|
| 230 | VAC | 10 | A |

# WDPHRHS

*pH and ORP*

**WDPHRHS**
Proportional controller with 1 dosing pump driven by internal built-in pH and ORP meter.
Output: (SCHUKO plug) for sterilisers or Cl/Br feeders. Liquid ends and pump head made of PVDF.

Measurement range:
from 0 to 14 pH
from 0 to 1000 mV

*Option: free of voltage EV contact.*

| PRESSURE | FLOW |
|---|---|
| 7 bar | 6 l/h |
| 5 bar | 1 l/h |
| 3 bar | 10 l/h |

| EV OUTPUT | MAX LOAD |
|---|---|
| 230 VAC | 10 A |

# All-in-one dosing pumps

*Dry feeder and salt chlorine generator measurement and control*
*Bromine, pH and active oxygen measurement and control*

## WDPHCA

**WDPHCA**
Proportional controller with 2 dosing pumps for pH and anti algae. 230VAC EV proportional or on/off output for Cl/Br feeders.
Weekly anti algae timer and level probe.
Liquid ends and pump head made of PVDF.

Wheel control system

Alarm output

RS485 output

Measurement range:
from 0 to 14 pH
from 0 to 10 mg/l $Cl_2$

*Optional: free of voltage EV contact.*

| PRESSURE | | FLOW | |
|---|---|---|---|
| 7 | bar | 6 | l/h |
| 5 | bar | 1 | l/h |
| 3 | bar | 10 | l/h |

# WDPHCF

**WDPHCF / WDPHCF PER**
Proportional controller with 2 dosing pumps for pH (acid- base) and flocculant. 230VAC EV proportional or on/off output for Cl/Br feeders. Level probe and gr/day flocculant dosing. Liquid ends and pump head made of PVDF.

Also available with peristaltic pumps (WDPHCF PER).

Wheel control system

Alarm output

RS485 output

Measurement range:
from 0 to 14 pH
from 0 to 10 mg/l $Cl_2$

*Optional: free of voltage EV contact.*

| PRESSURE | | FLOW | |
|---|---|---|---|
| 7 | bar | 6 | l/h |
| 5 | bar | 1 | l/h |
| 3 | bar | 10 | l/h |

# All-in-one dosing pumps

*Dry feeder and salt chlorine generator measurement and control*
*Bromine, pH and active oxygen measurement and control*

## WDPHOS

**WDPHOS**
Proportional controller with 2 dosing pumps for pH (acid- base) and active oxygen. Level probe. Temperature reading with enclosed probe. Weekly or daily (hr) active oxygen dosing.Liquid ends and pump head made of PVDF.

Settings:

- daily or weekly timer
- temperature compensation - pool size

Wheel control system Alarm output

RS485 output

PH measurement range: from 0 to 14

*Optional: free of voltage EV contact.*

| PRESSURE | | FLOW | |
|---|---|---|---|
| 7 | bar | 6 | l/h |
| 5 | bar | 1 | l/h |
| 3 | bar | 10 | l/h |

# MULTI-FUNCTION DOSING PUMPS

*Flow control*

(Constant, Divide, Multiply, PPM, Batch, Volt, mA, %, ml/q), stand-by* and flow sensor input*, alarm output** and level control.

## AMS MF

| PRESSURE | FLOW |
|---|---|
| 25 bar | 5 l/h |
| 15 bar | 10 l/h |
| 10 bar | 15 l/h |
| 7 bar | 20 l/h |
| 3 bar | 40 l/h |
| 2 bar | 60 l/h |

# KMS MF

| PRESSURE | | FLOW | |
|---|---|---|---|
| 2 | bar | 18 | l/h |
| 5 | bar | 10 | l/h |
| 20 | bar | 1 | l/h |
| 18 | bar | 2 | l/h |
| 15 | bar | 4 | l/h |
| 10 | bar | 5 | l/h |
| 8 | bar | 8 | l/h |
| 5 | bar | 1 | l/h |

# Multifunctions mode dosing pumps

*Flow control*

(Constant, Divide, Multiply, PPM, Batch, Volt, mA, %, ml/q), stand-by* and flow sensor input*, alarm output** and level control.

# TMS MF

| PRESSURE | FLOW |
|---|---|
| 20 bar | 5 l/h |
| 5 bar | 15 l/h |
| 4 bar | 20 l/h |
| 3 bar | 30 l/h |
| 1 bar | 50 l/h |
| 0 bar | 100 l/h |

# TMS MF + CTFI

**TMS MF + CTFI**
Foot-bath disinfection system.
It works with a pulser sender water meter (1/2" size).
% control with level probe.

**CTFI**
1/2"

| PRESSURE | FLOW |
|---|---|
| 20 bar | 5 l/h |
| 5 bar | 15 l/h |
| 4 bar | 20 l/h |
| 3 bar | 30 l/h |
| 1 bar | 50 l/h |
| 0 bar | 100 l/h |

# Dosing pumps

*Footbath disinfection systems*

## VMS MF + CTFI

| PRESSURE | | FLOW | |
|---|---|---|---|
| 20 | bar | 1 | l/h |
| 18 | bar | 2 | l/h |
| 18 | bar | 4 | l/h |
| 15 | bar | 2 | l/h |
| 15 | bar | 4 | l/h |
| 15 | bar | 5 | l/h |
| 10 | bar | 4 | l/h |
| 10 | bar | 5 | l/h |
| 10 | bar | 10 | l/h |
| 7 | bar | 6 | l/h |
| 5 | bar | 1 | l/h |
| 5 | bar | 10 | l/h |
| 5 | bar | 12 | l/h |
| 4 | bar | 8 | l/h |
| 3 | bar | 10 | l/h |
| 2 | bar | 15 | l/h |
| 1 | bar | 16 | l/h |

**VMS MF + CTFI**

Foot-bath disinfection system.

It works with a pulser sender water meter (1/2" size).

% control with level probe.

**CTFI**

1/2"

# VMS MF + CTFI & CWFA

**VMS MF + CTFI & CWFA**
Dechloration system for water filters.

It works with a pulse sender water meter (1.1/2” or 2” size).

Proportional volume control (product ppm) with level meter.

**CTFI**
1”1/2 e 2”

**CWFA**
3” e 4”

| PRESSURE | | FLOW | |
|---|---|---|---|
| 20 | bar | 1 | l/h |
| 18 | bar | 2 | l/h |
| 18 | bar | 4 | l/h |
| 15 | bar | 2 | l/h |
| 15 | bar | 4 | l/h |
| 15 | bar | 5 | l/h |
| 10 | bar | 4 | l/h |
| 10 | bar | 5 | l/h |
| 10 | bar | 10 | l/h |
| 7 | bar | 6 | l/h |
| 5 | bar | 1 | l/h |
| 5 | bar | 10 | l/h |
| 5 | bar | 12 | l/h |
| 4 | bar | 8 | l/h |
| 3 | bar | 10 | l/h |
| 2 | bar | 15 | l/h |
| 1 | bar | 16 | l/h |

# Dosing pumps

*Dosing and Control Systems for Algaecide, Active Oxygen and Flocculant*

## VMS MF

*Algaecide*

| PRESSURE | | FLOW | |
|---|---|---|---|
| 20 | bar | 1 | l/h |
| 18 | bar | 2 | l/h |
| 18 | bar | 4 | l/h |
| 15 | bar | 2 | l/h |
| 15 | bar | 4 | l/h |
| 15 | bar | 5 | l/h |
| 10 | bar | 4 | l/h |
| 10 | bar | 5 | l/h |
| 10 | bar | 10 | l/h |
| 7 | bar | 6 | l/h |
| 5 | bar | 1 | l/h |
| 5 | bar | 10 | l/h |
| 5 | bar | 12 | l/h |
| 4 | bar | 8 | l/h |
| 3 | bar | 10 | l/h |
| 2 | bar | 15 | l/h |
| 1 | bar | 16 | l/h |

# CONSTANT MODE DOSING PUMPS

*Flow control*

Constant mode dosing pumps with level and flow control. Double frequency scale.

## AMS CL PLUS

| PRESSURE | FLOW |
|---|---|
| 25 bar | 5 l/h |
| 15 bar | 10 l/h |
| 10 bar | 15 l/h |
| 7 bar | 20 l/h |
| 3 bar | 40 l/h |
| 2 bar | 60 l/h |

# Constant mode dosing pumps

*Flow control*

## K CL PLUS

| PRESSURE | FLOW |
|---|---|
| 20 bar | 1 l/h |
| 18 bar | 2 l/h |
| 15 bar | 4 l/h |
| 10 bar | 5 l/h |
| 8 bar | 8 l/h |
| 5 bar | 1 l/h |
| 5 bar | 10 l/h |
| 2 bar | 18 l/h |

# Constant mode dosing pumps

*Flow control*

Constant mode dosing pumps with level and flow control. Double frequency scale.

## T CL

| PRESSURE | FLOW |
|---|---|
| 20 bar | 5 l/h |
| 5 bar | 15 l/h |
| 4 bar | 20 l/h |
| 3 bar | 30 l/h |
| 1 bar | 50 l/h |
| 0 bar | 100 l/h |

# V CL

| PRESSURE | | FLOW | |
|---|---|---|---|
| 20 | bar | 1 | l/h |
| 18 | bar | 2 | l/h |
| 18 | bar | 4 | l/h |
| 15 | bar | 2 | l/h |
| 15 | bar | 4 | l/h |
| 15 | bar | 5 | l/h |
| 10 | bar | 4 | l/h |
| 10 | bar | 5 | l/h |
| 10 | bar | 10 | l/h |
| 7 | bar | 6 | l/h |
| 5 | bar | 1 | l/h |
| 5 | bar | 10 | l/h |
| 5 | bar | 12 | l/h |
| 4 | bar | 8 | l/h |
| 3 | bar | 10 | l/h |
| 2 | bar | 15 | l/h |
| 1 | bar | 16 | l/h |

# VCOG & VCLG

*Flocculant*

**VCOG & VCLG**

Metering pump for flocculant.

Double scale (24h):
- 0 to 300 gr/day
- 0 to 3000 gr/day

Level probe included.

**PRESSURE**

5 **bar**

**FLOW**

3000 **gr/24h**

# Dosing pumps

*Dechloration system for filters cleaning waters*

## VCLD

**VCLD**
Dechlorination system for waters filters (chlorine).
Level meter. SEFT C contact less water sensor (fittings 3/4”).
SEFT P flow sensor (fittings 1/2”).

Settings:
- 0-800 gr/h
- 0-8000 gr/h

Level probe included.

SEFT C and SEFT P are optional.

| PRESSURE | FLOW |
|---|---|
| 3 bar | 10 l/h |

# VCLS

*Scent and essences dosing*

**VCLS**
Silenced pump for scent and essences dosing at spas and hammam centres.

Double scale:
- 0 to 100 g/hr
- 0 to 1000 g/hr

Level probe included.

**PRESSURE**

7 **bar**

**FLOW**

1 **l/h**

# Dosing pumps

*Scent and essences dosing for spa*

## VCLSE

*C.E. Scent and essences dosing*

**VCLSE**
Silenced pump for scent and essences dosing at spas and hammam centres. Contact (N.O.) for external control.

Double scale:
- 0 to 100 g/hr
- 0 to 1000 g/hr

Level probe included.

| PRESSURE | | FLOW | |
|---|---|---|---|
| 7 | bar | 1 | l/h |

# PROPORTIONAL DOSING PUMPS WITH PARAMETER MEASUREMENT

*PH / ORP measurement & control*

## TMS PH & TMS RH

Proportional dosing pumps with pH and/or ORP measurement and control, with overdose alarm.

**TMS PH**
Proportional pump driven by internal built-in pH meter (0÷14pH) stand-by and level control, supplied without pH probe.

**TMS RH**
Proportional pump driven by internal built-in ORP meter (0÷1000mV) stand-by and level control, supplied without ORP probe.

| PRESSURE | | FLOW | |
|---|---|---|---|
| 20 | bar | 5 | l/h |
| 5 | bar | 15 | l/h |
| 4 | bar | 20 | l/h |
| 3 | bar | 30 | l/h |
| 1 | bar | 50 | l/h |
| 0 | bar | 100 | l/h |

# Proportional dosing pumps with parameter measurement

*PH / ORP measurement & control*

## VMS PO

**VMS PO**
Proportional pump driven by internal built-in pH meter (0/14pH) or ORP meter (-1000mV/ +1000mV). Parameter set by menu.
Level control. PVDF pump head and accessories.
Fast calibration on standard value.
Restore last calibration.

| PRESSURE | FLOW |
|---|---|
| 20 bar | 1 l/h |
| 18 bar | 2 l/h |
| 18 bar | 4 l/h |
| 15 bar | 2 l/h |
| 15 bar | 4 l/h |
| 15 bar | 5 l/h |
| 10 bar | 4 l/h |
| 10 bar | 5 l/h |
| 10 bar | 10 l/h |
| 7 bar | 6 l/h |
| 5 bar | 1 l/h |
| 5 bar | 10 l/h |
| 5 bar | 12 l/h |
| 4 bar | 8 l/h |
| 3 bar | 10 l/h |
| 2 bar | 15 l/h |
| 1 bar | 16 l/h |

# VMSA $H_2O_2$

*Active oxygen*

**VMSA $H_2O_2$**
Active oxygen pump.

Also available with peristaltic pump (VMSA H2O2 PER).

Settings:
- day/week timer
- temperature compensation
- pool size

Level and temperature probes included.

| PRESSURE | FLOW |
|---|---|
| 3 bar | 4 l/h |
| 2 bar | 10 l/h |

# MULTIPARAMETER DIGITAL CONTROLLERS

*Measurement and control of several parameters simultaneously*

pH / Total Chlorine / Free chlorine / Combined Chlorine / ORP / Turbidity Conductivity / Inductive conductivity / Bromine / Ozone + Temperature

## CENTURIO POOL series

**CENTURIO**
Options:
- USB for data log recording
- Current Output (0/4 - 20 mA)
- Ethernet
- 3G/4G modem
- MODBUS RTU & TCP/IP
- WIFI

## RANGES

### pH
**from 0 to 14 pH**

### ORP
**from -1000 to 1000 mv**

### Total chlorine
**from 0 to 20 mg/l**

### Free chlorine
**from 0 to 20 mg/l**

### Combined chlorine
**from 0 to 10 mg/l**

### Bromine
**from 0 to 10 mg/l**

### Turbidity
**from 0 to 4000 NTU**

### Temperature
**from 0 to 100 °C**

### Conductivity
**from 0 to 300 mS**

CENTURIO POOL is a digital regulation and measurement system for multi-parameter control in swimming pool water treatment. It combines complete control and extreme ease of use with the elegance of the case made by Giugiaro Design.

Equipped with a Linux operating system, a high-performance ARM A5 microprocessor and a large color touchscreen, CENTURIO POOL can be set to work with pH priorities and can control flocculant output, shock chlorination and backwashing of filters and simultaneously manage up to 10 channels to read the following parameters: pH, free chlorine, combined chlorine, active free chlorine, total chlorine, conductivity, ORP, NTU, product levels, pool water level. For each channel CENTURIO POOL has 2 digital setpoints (ON / OFF), 2 proportional setpoints (IS), 1 mA output setpoint and 1 Temperature setpoint; you can also set 6 timers with a maximum of 10 daily schedules each.

CENTURIO POOL can be connected to the Internet via WIFI, GSM or ETHERNET and remotely controlled via NIMBUS, the online control system designed by EMEC. It is also equipped with the MODBUS serial communication protocol (optional) which allows connection with other devices within RS485 networks.

NIMBUS

DIGITAL SERVICES

# Multiparameter digital controllers

*Measurement and control of several parameters simultaneously*

pH / Total Chlorine / Free chlorine / Combined Chlorine / ORP / Turbidity Conductivity / Inductive conductivity / Bromine / Ozone + Temperature

# LDPHXX series

**LDPHXX / LDPHXX PLUS**
Options:
- USB for data log recording
- Current Output (0/4 - 20 mA)
- Ethernet
- 3G/4G modem
- MODBUS
- WIFI

**LDPHXX PLUS features**
- 5 relais (2 setpoint; alarm; probe cleaning; circulation)
- Probe Cleaning
- PID
- mA output

*Specificare i parametri e il tipo di sonda per cloro al momento dell'ordine

## MODELS

### LDPHRH / LDPHRH PLUS
**pH (0/14) - Redox (0/1000 mV) - °C (0/99,9)**

### LDPHCL* / LDPHCL* PLUS
**pH (0/14) - Cloro (0/10 mg/l $Cl_2$) - °C (0/99,9)**

### LDPHBR / LDPHBR PLUS
**pH (0/14) - Bromo (0/10 mg/l $Br_2$) - °C (0/99,9)**

### LDPHDO / LDPHDO PLUS
**pH (0/14) - $O_2$ (0/200 mg/l $H_2O_2$) - °C (0/99,9)**

Controller for acid (pH) and a second parameter. Wheel with "EASY-NAV" control, Flow control, Local & Remote Controlled, NIMBUS web communication, Permanent data storage with system log, PT100 temperature probe, Stand-by input, Alarms: damaged probes - max dosage - threshold - levels - flow, Programmable delay at dosing start-up (up to 60 minutes), Priority dosage, Probe readout menu, Probes check up, Multiple probe readings can be viewed, Working modes: on/off, impulsive proportional, proportional PWM and fixed PWM, Automatic or manual dosing activity, Chlorine/Bromine selection with ECL6 (LDPHCL), mA output (option).

NIMBUS

DIGITAL SERVICES

# Single parameter digital controllers

*pH - ORP - Cl2 - Br2 - O3 - Total Chlorine - H2O2 - Inductive conductivity - Turbidity + Temperature measurement and control*

# LDS series

**LDS / LDS PLUS**
Options:
- USB for data log recording
- Current Output (0/4 - 20 mA)
- Ethernet
- 3G/4G modem
- MODBUS
- WIFI

**LDS PLUS features**
- 5 relais (2 setpoint; alarm; probe cleaning; circulation)
- Probe Cleaning
- PID
- mA output

## MODELS

### LDSPH / LDSPH PLUS
**pH measurement and control**

### LDSRH / LDSRH PLUS
**ORP measurement and control**

### LDSCL / LDSCL PLUS
**Chlorine measurement and control (reading scale based on probe)**

### LDSCD / LDSCD PLUS
**Conductivity measurement and control**

### LDSCDIND / LDSCDIND PLUS
**Inductive conductivity measurement and control (ECDINDPT probe)**

### LDSETORB2 / LDSETORB2 PLUS
**Turbidity measurement and control (ETORB2 probe)**

### LDSTRC / LDSTRC PLUS
**Florescence measurement and control**

### LDSFL / LDSFL PLUS
**Fluorine measurement and control**

Wheel with “EASY-NAV” control, flow control, local & Remote Control, ERMES web communication, permanent data storage with system log, PT100 temperature probe, Stand-by input, Alarms: damaged probes - max dosage - threshold - levels - flow, Programmable delay at dosing start-up (up to 60 minutes), Priority dosage, Automatic temperature compensation, Probe readout menu (LDSCDIND), Working modes: on/off, impulsive proportional, proportional PWM and fixed PWM, Automatic or manual dosing activity, mA output (option).

NIMBUS

DIGITAL SERVICES

# Single parameter digital controllers

**RACK MOUNTING CONTROLLERS**
Controller for: pH, ORP, Chlorine (Total chlorine, Free Chlorine, Chlorine Dioxide, Hydrogen Peroxyde, Ozone, Bromine, Peracetic Aciddepending on the probe), Conductivity (Probes not included). 2 On-Off/proportional setpoints, Flow alarm, Flow sensor stand-by input, 0÷20 mA or 4÷20 mA output proportional to read measured value and programmable in the reading range.

# JA

JA PRO control instruments are rack mounting (96x96) single reading systems with temperature reading. On/Off, impulsive proportional and PID are main working modes.
It can set and monitor: pH, ORP, chlorine (depending on the probe: total chlorine, free chlorine, chlorine dioxide, hydrogen peroxide, ozone, bromine or paracetic acid) and conductivity (uS/S - Ohm - TDS / PPM) with automatic range and probe / product selection (H3PO4 - H2SO4 - HNO3 - HCl - NaOH - NaCl). Probes are not included.

JA PRO has: 2 setpoints (on/off, proportional), flow alarm, flow sensor stand-by input, 0-20 mA or 4-20 mA output proportional to read value and programmable in the reading range, alarm output. Avalilable low voltage 12VDC or 24VDC power supply. Available IP54 protection cover.
JA PRO is equipped with mA module and MODBUS serial communication to be connected to other devices on RS485 networks and TCP/IP MODBUS.

**JA PRO**
Options:
- 12VDC or 24VDC power supply
- IP54 protection

**JA PRO**
Features:
- mA module
- MODBUS serial communication

# J DIGITAL & DIN DIGITAL

**J DIGITAL**

*Rack mounting (96x48) single reading systems*

J DIGITAL control instruments are a series of rack mounting (96x48) single reading systems that meets many applications.

It can set and monitor: pH, ORP, chlorine (depending on the probe: total chlorine, free chlorine, chlorine dioxide, hydrogen peroxide, ozone, bromine or paracetic acid), conductivity, ozone, chlorine dioxide and temperature.

Probes are not included.

J DIGITAL models have: 2 setpoints (on/off, proportional), flow alarm, flow sensor stand-by input, 0-20 mA or 4-20 mA output proportional to read value and programmable in the reading range. Available IP54 protection cover.

**DIN DIGITAL**

*Rail mounting (6 modules) single reading system*

DIN DIGITAL control instruments are a series of rail mounting (6 modules) single reading systems that meets many applications.

It can set and monitor: pH, ORP, chlorine (depending on the probe: totalchlorine, free chlorine, chlorine dioxide, hydrogen peroxide, ozone, bromine or paracetic acid), conductivity, ozone, chlorine dioxide and temperature. Probes are not included.

DIN DIGITAL models have: 2 setpoints (on/off, proportional), flow alarm, flow sensor stand-by input, 0-20 mA or 4-20 mA output proportional to read value and programmable in the reading range.

# MODEM AND EXTERNAL COMMUNICATION MODULES

*For LD, WDPHXX and CENTURIO controller series*

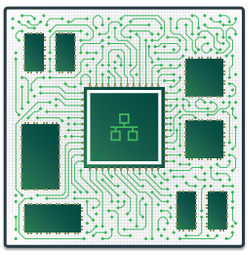

**ETHERNET MODULE**
Internal standard ETHERNET (RJ45) controller for LD encoder.

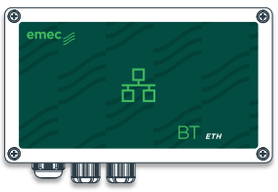


**BT ETH**
Ethernet controller for standard RJ45 network. IP65.

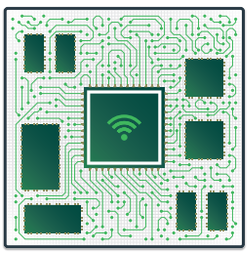

**WIFI MODULE**
Module for WIFI network. IP65.

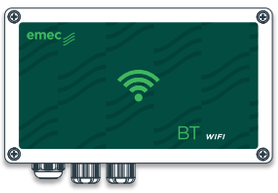


**BT WIFI**
Module for WIFI connection. IP65.

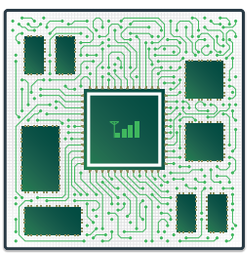

**3G/4G MODULE**
Internal 3G/4G modem for LD encoder.

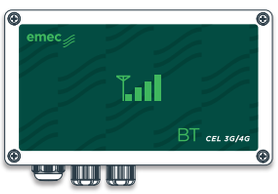


**BT CEL**
Modem for mobile network. IP65.

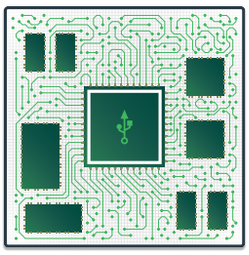

**USB MODULE**
Module for USB connection.
IP65.

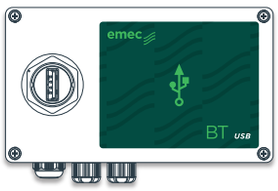


**BT USB**
USB module for USB datalog recording. IP65.

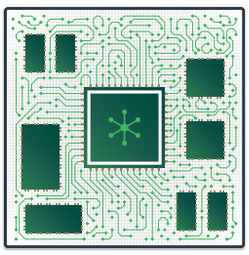

**MODBUS MODULE**
MODBUS RTU module for PLC connection.

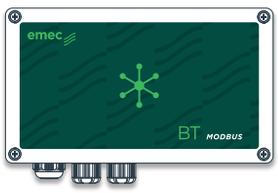


**BT MODBUS**
Serial communication module for PLC connection.

# Remote measurement and control

## CONNECTION EXAMPLE

*ETHERNET - WIFI*

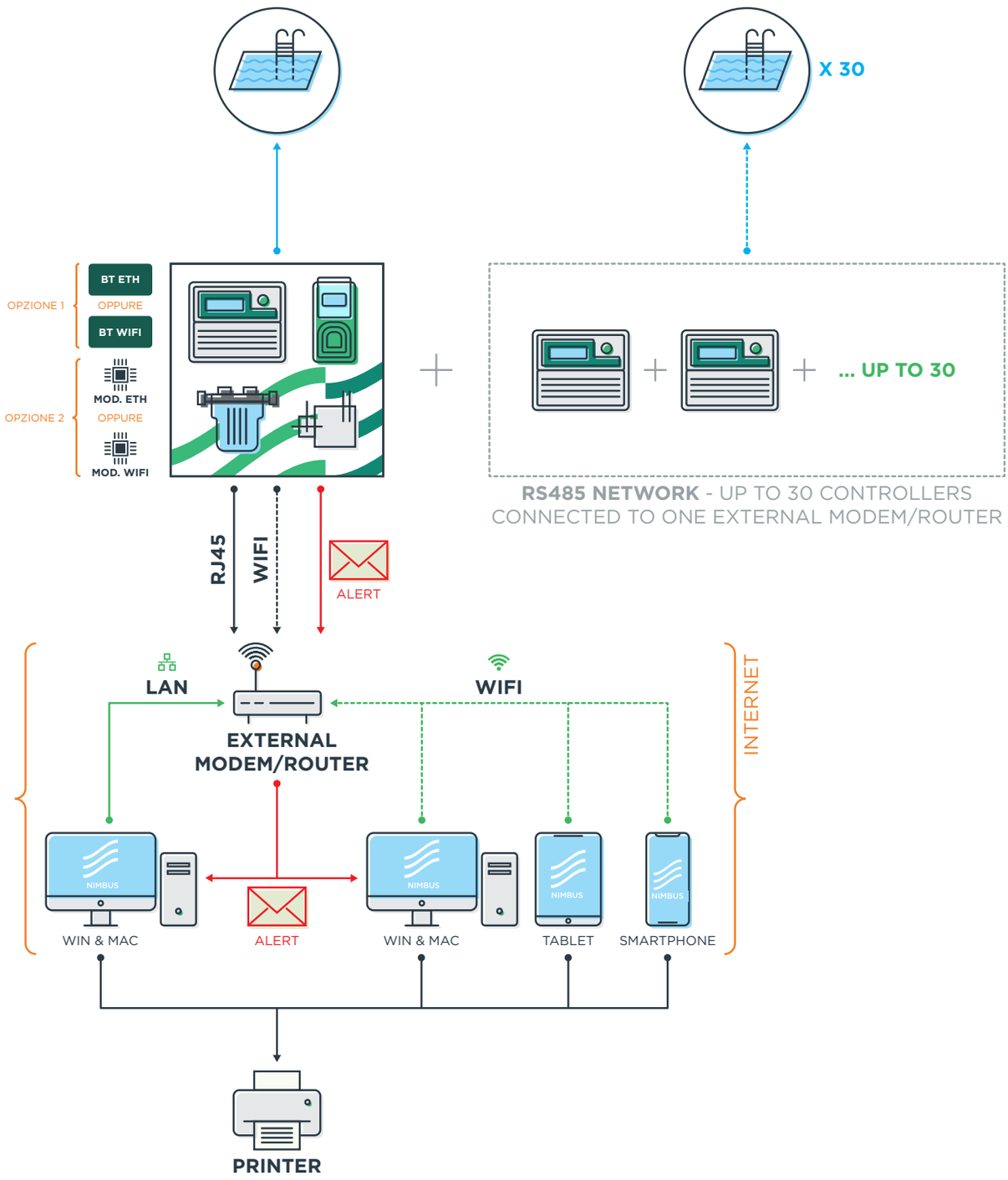

# CONNECTION EXAMPLE

*GSM - 3G/4G*

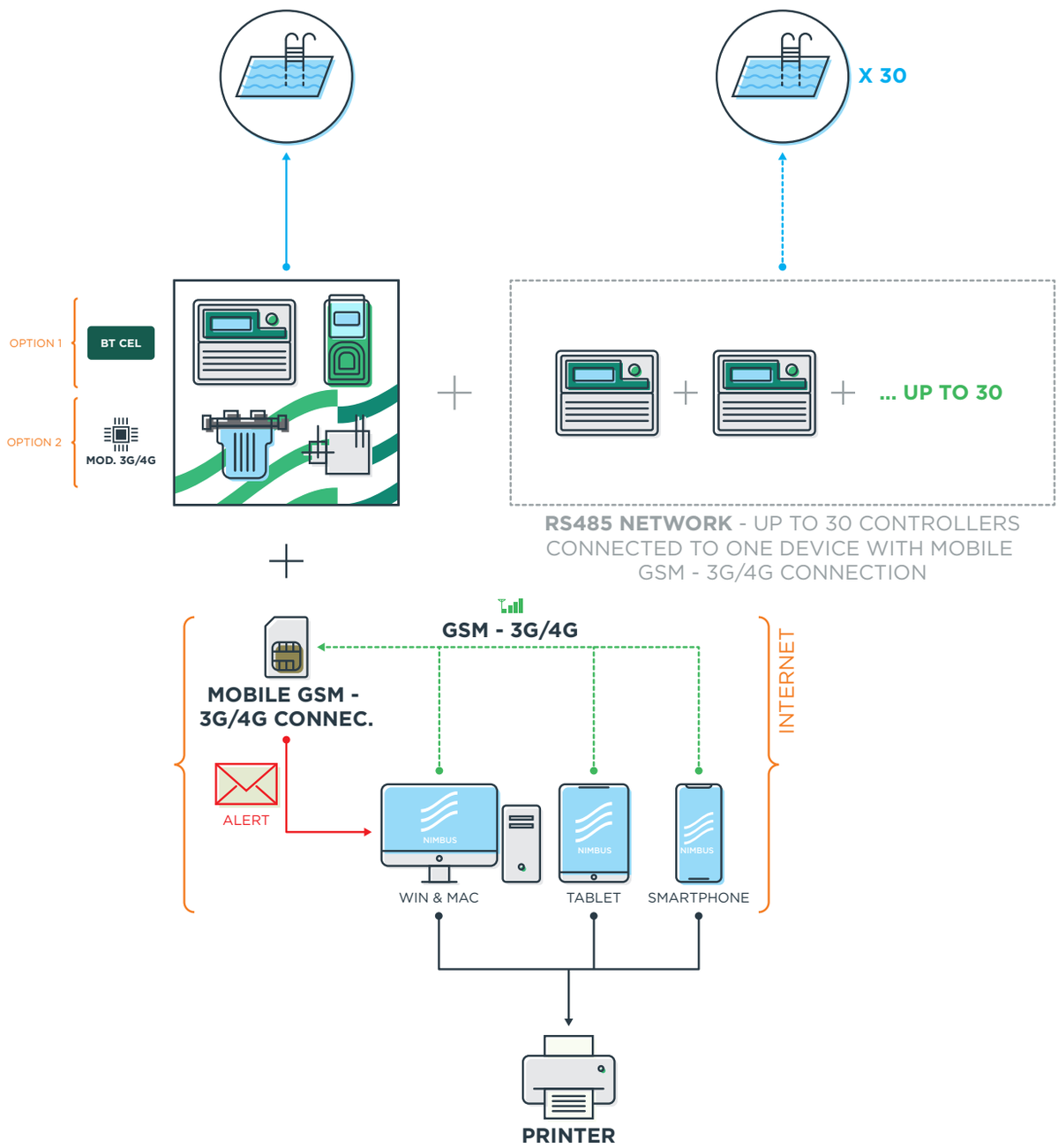

# ALL-IN-ONE CONTROL AND DOSING SOLUTIONS

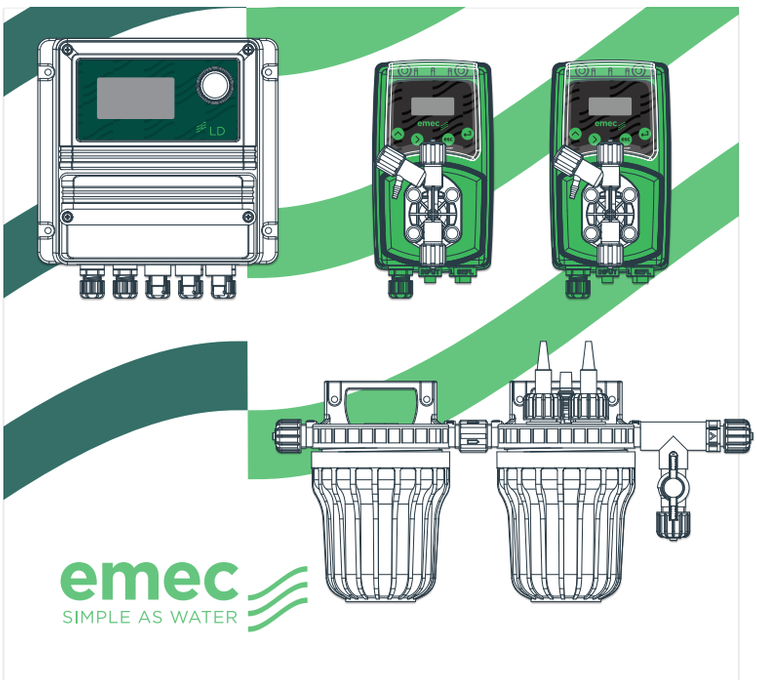


## PA-LDPHRH

**PH AND ORP PROPORTIONAL CONTROL**

- Controller LDPHRH
- Dosing pump VMS MF 03 10 (10 l/h)
- Dosing pump VMS MF 03 10 (10 l/h)
- Filter NFIL
- pH probe EPHS
- ORP probe ERHS
- Probe holders NPED4

**Size:** 600x650 mm
Customized coloured background on demand

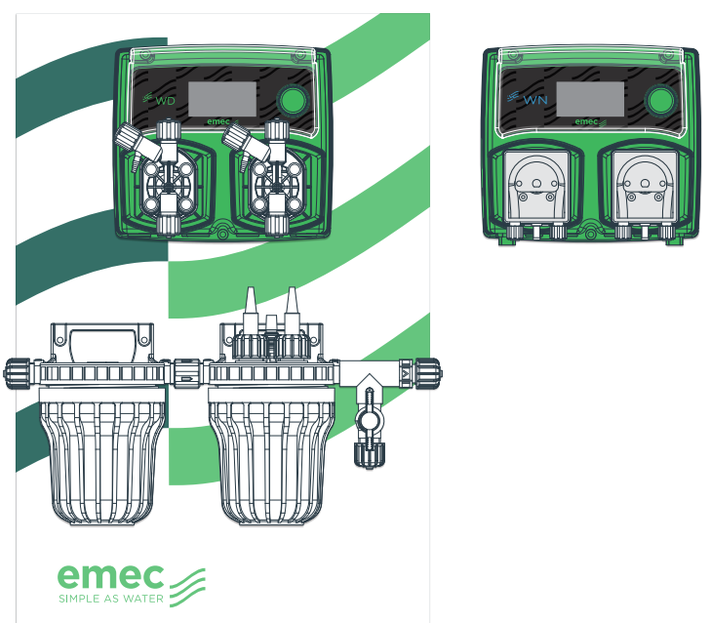


## PA-WDPHOS & PA-WNPHOS

**PH AND ACTIVE OXYGEN PROPORTIONAL CONTROL**

- Controller WDPHOS 03 10 (10 l/h) and 03 04 (4 l/h) or WNPHOS PER (with peristaltic dosing pumps)
- Filter NFIL
- Temperature probe ETEPTCH18
- pH probe EPHS
- Probes holder NPED4

**Optional:** Also available with WNPHOS PER

**Size:** 400x600 mm
Customized coloured background on demand.

OUTPUT **RS485**

*The images contained in these pages are for illustrative purposes only. For more information on possible configurations, contact the sales office or your sales representative.*

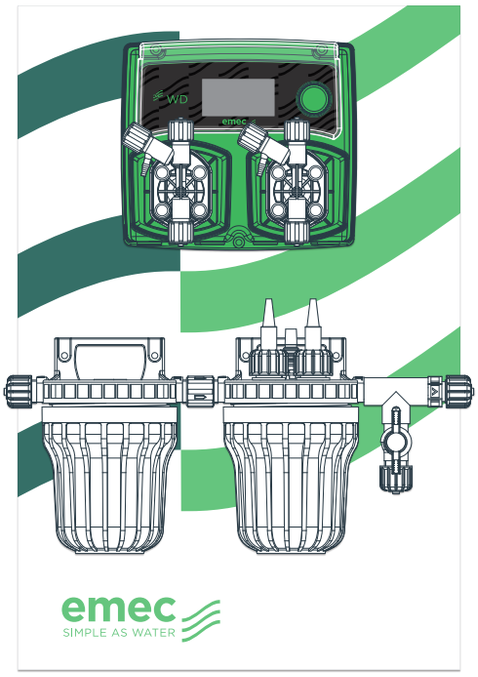

# PA-WDPHRH
## & PA-WNPHORH

**PH AND ORP PROPORTIONAL CONTROL**

- Controller WDPHRH 03 10 (10 l/h), 05 01 (1 l/h) and 10 04 (4 l/h), or WDPHRH PER (with peristaltic dosing pumps).
- Filter NFIL
- Probe ORP ERHS
- Probe pH EPHS
- Probes holder NPED4

**Optional:** Also available with WNPHRH PER

**Size:** 400x600 mm
Customized coloured background on demand.

OUTPUT **RS485**

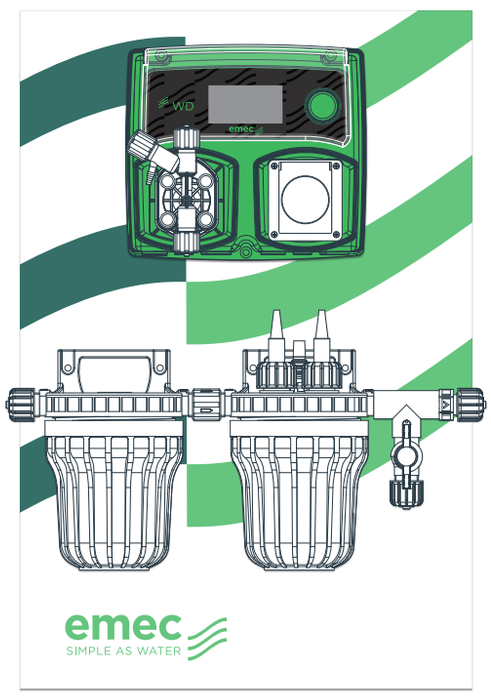


# PA-WDPHEV

**PH OR ORP PROPORTIONAL CONTROL, DRY FEEDER SOLENOID VALVE OR SALT GENERATOR (230VAC / 10A) OUTPUT**

- Controller WDPHRHS 07 06 (6 l/h) or 05 01 (1 l/h) 2. Filter NFIL
- Probe ORP ERHS
- Probe pH EPHS
- Probes holder NPED4

**Size:** 400x600 mm
Customized coloured background on demand.

OUTPUT **RS485**

# All-in-one systems

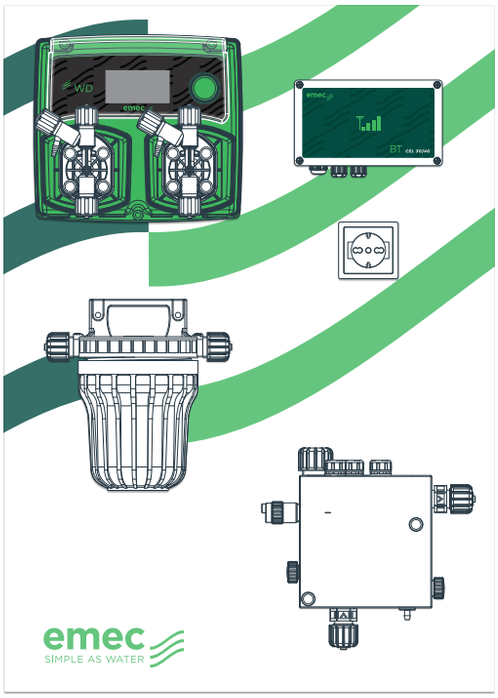


## PA-WDPHCFSA
## & PA-WDPHCASA

**SALT CHLORINE GENERATOR VERSION:**
*Flocculant with continuos dosing PA-WDPHCFSA*
*Anti algae with weekly timer PA-WDPHCASA*

- Controller WDPHCA 07 06 (6 l/h), 05 01 (1 l/h) or 10 04 (4 l/h)
- Probe pH EPHS
- Filter NFIL
- Proximity sensor SEPR
- Open amperometric cell ECL6
- Modem BT CEL
- Output 10 A 220 VAC

**Optional:** Free of voltage EV contact.

**Size:** 500x700 mm
Customized coloured background on demand.

OUTPUT **RS485**

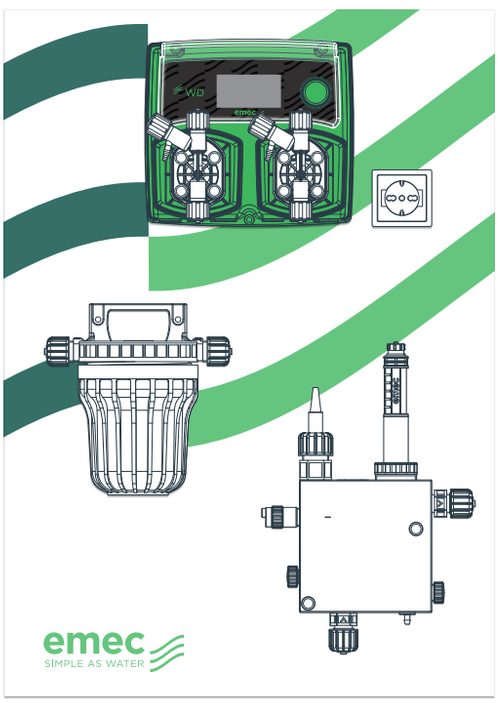


## PA-WDPHCA/CF
## & PA-WDPHBA/BF

**CHLORINE / BROMINE DRY FEEDER:**
*Flocculant with continuos dosing PA-WDPHCFBF*
*Anti algae with weekly timer PA-WDPHCABA*

- Controller WDPHCL 07 06 (6 l/h), 05 01 (1 l/h) or 10 04 (4 l/h)
- Probe pH EPHS
- Chlorine probe SCL3S/20 or Bromine probe SBR 1/20
- Filter NFIL
- Proximity sensor SEPR
- Probes holder PEF1R
- Output 10 A 220 VAC

**Optional:** Free of voltage EV contact.

**Size:** 500x700 mm
Customized coloured background on demand.

OUTPUT **RS485**

*Le immagini contenute in queste pagine sono solo a scopo illustrativo, per maggiori informazioni su possibili configurazioni, contattare l'ufficio commerciale o il proprio rappresentante commerciale di riferimento.*

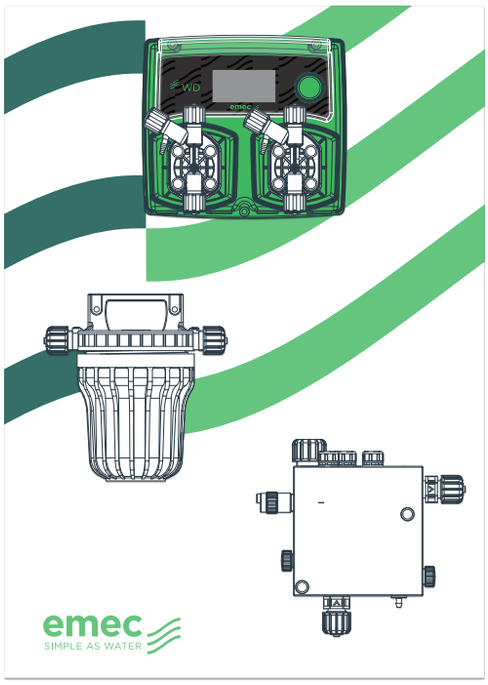

# PA-WDPHCL
## & PA-WNPHCL

**PH AND CHLORINE PROPORTIONAL CONTROL**

- Controller WDPHCL 07 06 (6 l/h), 05 01 (1 l/h) or 10 04 (4 l/h), or WNPHCL PER (with peristaltic dosing pumps).
- Filter NFIL
- Proximity sensor SEPR
- Probe pH EPHS
- Open amperometric cell ECL6

**Optional:** Also available with WNPHCL PER

**Size:** 500x700 mm
Customized coloured background on demand.

OUTPUT **RS485**

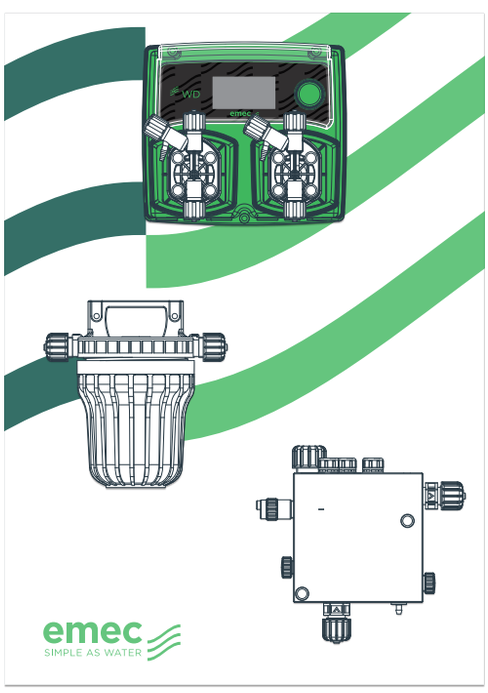


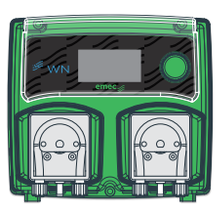


# PA-WDPHCLO
## & PA-WNPHCLO

**PH AND CHLORINE PROPORTIONAL CONTROL (INORGANIC/ORGANIC)**

- Controller WDPHCL 07 06 (6 l/h), 05 01 (1 l/h) or 10 04 (4 l/h), or WNNPHCL PER (with peristaltic dosing pumps).
- Filter NFIL
- Proximity sensor SEPR
- Probe pH EPHS
- Chlorine probe SLC3S/20
- Probes holder PEF1R

**Optional:** Also available with WNPHCLO PER

**Size:** 500x700 mm
Customized coloured background on demand.

OUTPUT **RS485**

# All-in-one systems

*Controller based system with open amperometric cell ECL6*

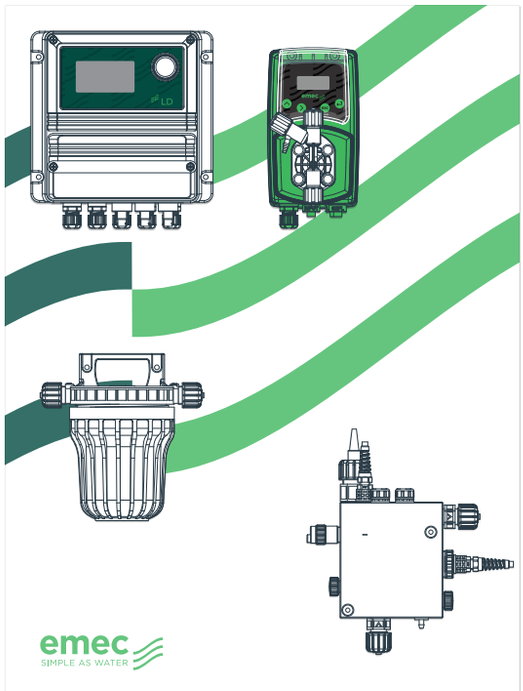


## PA-LDPHCL

**FOR DRY FEEDER USAGE (CHLORINE / BROMINE) OR SALT CHLORINE GENERATOR. MEDIUM SIZE POOL**

- Controller LDPHCL
- Dosing pump for acid VMS MF 03 10 (10 l/h) 3. Filter NFIL
- Probe pH EPHS
- Proximity sensor SEPR
- Temperature probe ETEPTCH18
- Open amperometric cell ECL6

**Size:** 600x800 mm
Customized coloured background on demand.

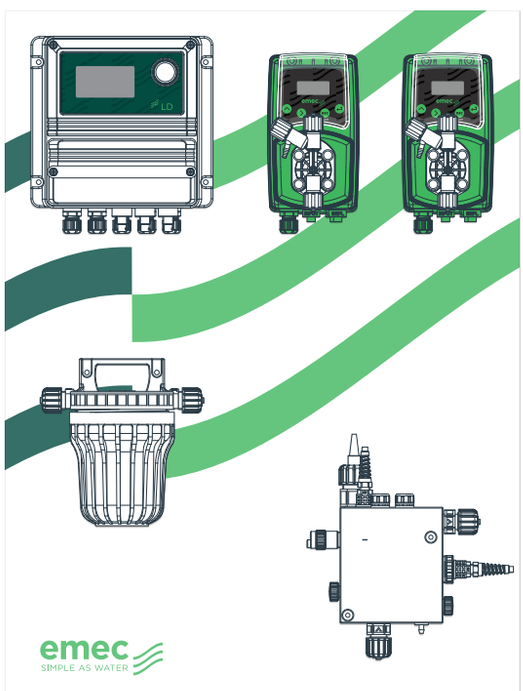


## PA-LDPHCLO

**PH AND CHLORINE PROPORTIONAL CONTROL. MEDIUM SIZE POOL**

- Controller LDPHCL
- Dosing pump for acid VMS MF 03 10 (10 l/h)
- Dosing pump for chlorine VMS MF 02 15 (15 l/h)
- Filter NFIL
- Probe pH EPHS
- Proximity sensor SEPR
- Temperature probe ETEPTCH18
- Open amperometric cell ECL6

**Size:** 600x800 mm
Customized coloured background on demand.

*The images contained in these pages are for illustrative purposes only. For more information on possible configurations, contact the sales office or your sales representative.*

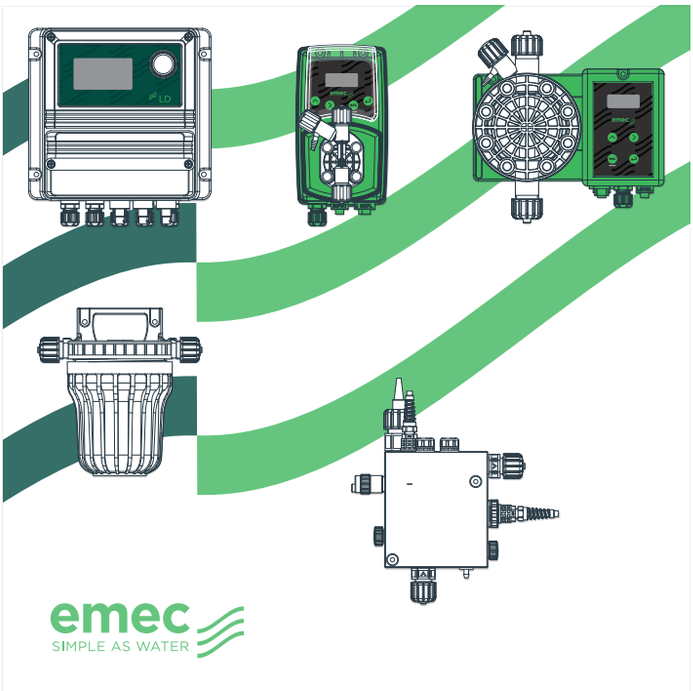


# PA-LDPHCLOB

**FOR PH AND CHLORINE PROPORTIONAL CONTROL. LARGE SIZE POOL**

- Controller LDPHCL
- Dosing pump for acid VMS MF 02 15 (15 l/h)
- Dosing pump for chlorine TMS MF 03 30 (30 l/h)
- Filter NFIL
- Probe pH EPHS
- Proximity sensor SEPR
- Temperature probe ETEPTCH18
- Open amperometric cell ECL6

**Size:** 800x800 mm
Customized coloured background on demand.

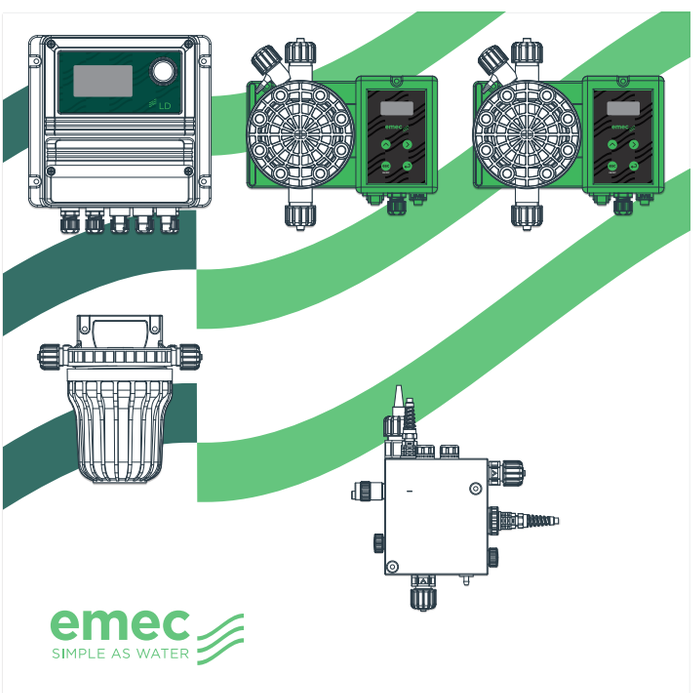


# PA-LDPHCLOBG

**FOR PH AND CHLORINE PROPORTIONAL CONTROL. LARGE SIZE POOL**

- Controller LDPHCL
- Dosing pump for acid TMS MF 03 30 (30 l/h)
- Dosing pump for chlorine TMS MF 01 50 (50 l/h)
- Filter NFIL
- Probe pH EPHS
- Proximity sensor SEPR
- Temperature probe ETEPTCH18
- Open amperometric cell ECL6

**Size:** 800x800 mm
Customized coloured background on demand.

# All-in-one systems

*Controller based system with closed amperometric cell SCL3S/20 and PEF1*

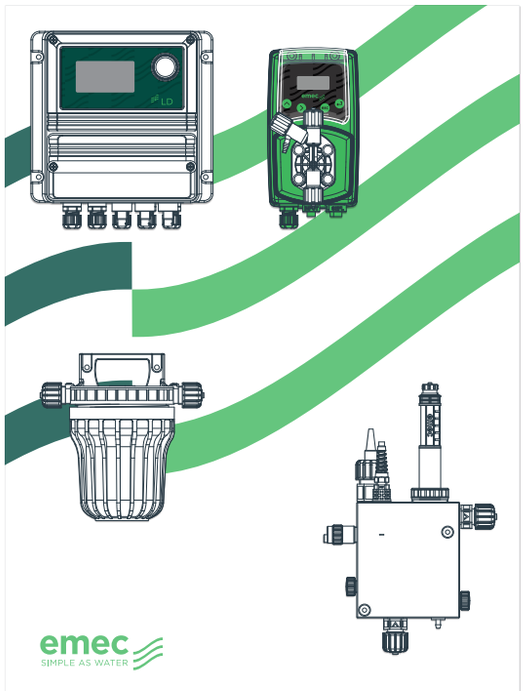


## PA-LDPHCLV
## & PA-LDPHBR

**FOR DRY FEEDER OR SALT CHLORINE GENERATOR. MEDIUM SIZE POOL**

- Controller LDPHCL
- Dosing pump for acid VMS MF 03 10 (10 l/h)
- Filter NFIL
- Proximity sensor SEPR
- Probe pH EPHS
- Chlorine probe SCL3S/20
- Temperature probe ETEPTCH18
- Probes holder PEF1R

**PA-LDPHBR:** Also available with bromine probe EBR 1/20.

**Size:** 600x800 mm
Customized coloured background on demand.

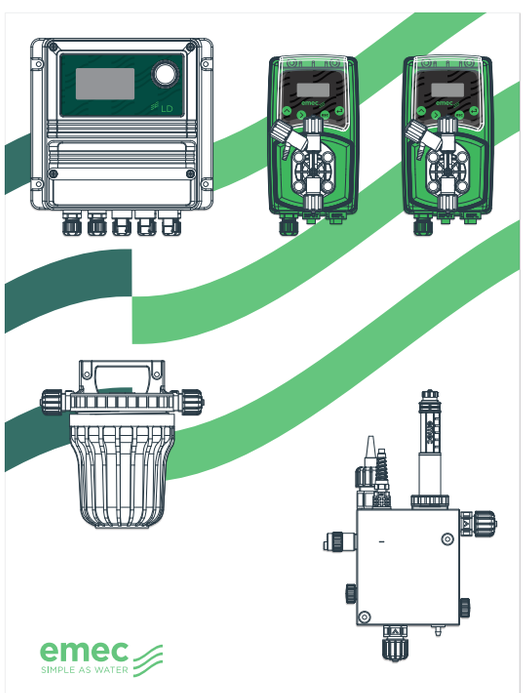


## PA-LDPHCLVD

**PH AND CHLORINE PROPORTIONAL CONTROL (INORGANIC/ORGANIC). MEDIUM SIZE POOL**

- Controller LDPHCL
- Dosing pump for acid VMS MF 03 10 (10 l/h)
- Dosing pump for chlorine VMS MF 02 15 (15 l/h)
- Filter NFIL
- Proximity sensor SEPR
- Probe pH EPHS
- Chlorine probe SCL3S/20
- Temperature probe ETEPTCH18
- Probes holder PEF1R

**Size:** 600x800 mm
Customized coloured background on demand.

*The images contained in these pages are for illustrative purposes only. For more information on possible configurations, contact the sales office or your sales representative.*

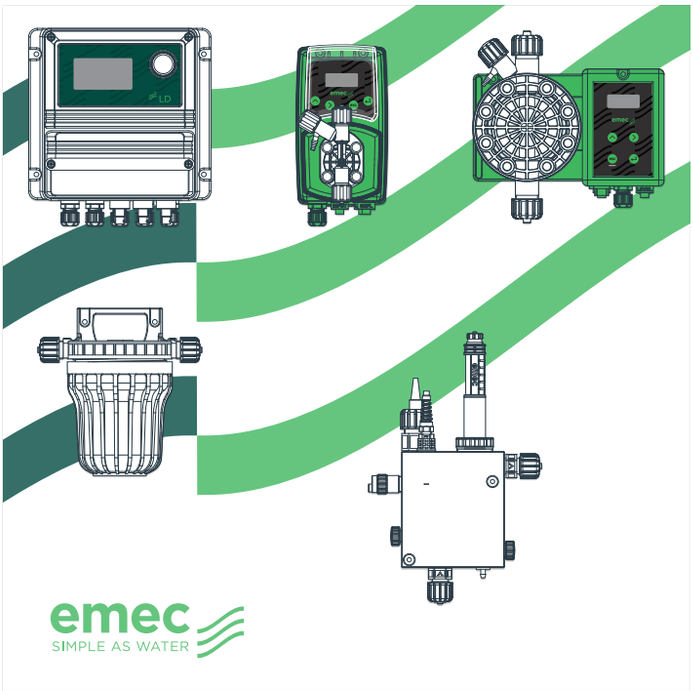


# PA-LDPHCLVG

**PH AND CHLORINE PROPORTIONAL CONTROL (INORGANIC/ORGANIC). BIG SIZE POOL**

- Controller LDPHCL
- Dosing pump for acid VMS MF 02 15 (15 l/h)
- Dosing pump for chlorine TMS MF 03 30 (30 l/h)
- Filter NFIL
- Proximity sensor SEPR
- Probe pH EPHS
- Chlorine probe SCL3S/20
- Probes holder PEF1R

**Size:** 800x800 mm
Customized coloured background on demand.

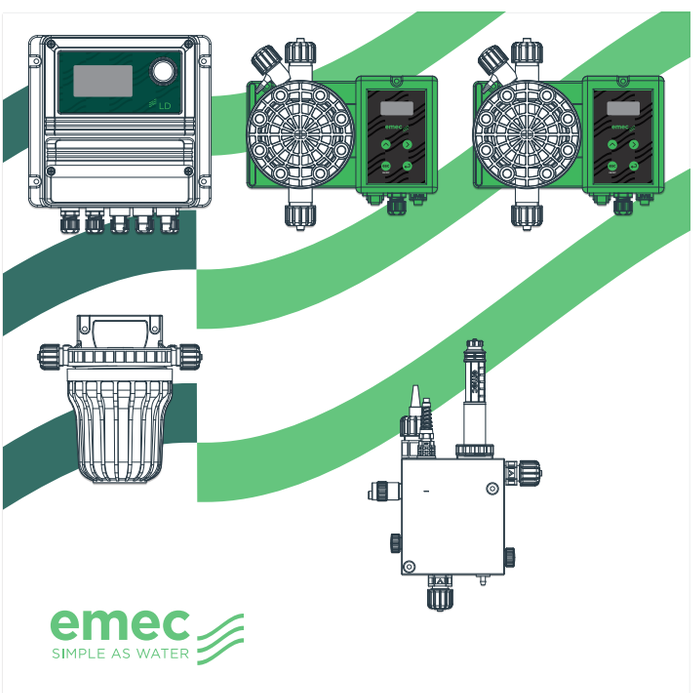


# PA-LDPHCLGD

**PH AND CHLORINE PROPORTIONAL CONTROL (INORGANIC/ORGANIC). BIG SIZE POOL**

- Controller LDPHCL
- Dosing pump for acid TMS MF 03 30 (30 l/h)
- Dosing pump for chlorine TMS MF 01 50 (50 l/h)
- Filter NFIL
- Proximity sensor SEPR
- Probe pH EPHS
- Chlorine probe SCL3S/20
- Probes holder PEF1R

**Size:** 800x800 mm
Customized coloured background on demand.

# Advanced all-in-one systems

# PA-CEDB

**PH, ORP, FREE CHLORINE, TOTAL CHLORINE, COMBINED CHLORINE AND TEMPERATURE ANTI ALGAE AND FLOCCULANT TREATMENT**

- Controller CENTURIO POOL
- Dosing pump for acid VMS MF 03 10 (10 l/h)
- Dosing pump for chlorine VMS MF 02 15 (15 l/h)
- Dosing pump for flocculant VCLG
- Dosing pump for anti algae VMS MF 07 06 (6 l/h)
- Filter NFIL
- Probe di pH EPHS
- ORP probe ERHS
- Temperature probe ETEPTCH18
- Free chlorine probe SCL3S/20
- Total chlorine probe SCL8/20
- Proximity sensor SEPR
- Probes holder PEF22R

**Optional:** also available with Centurio Pool controller

**Size:** 1000x800 mm
Customized coloured background on demand.

*The images contained in these pages are for illustrative purposes only. For more information on possible configurations, contact the sales office or your sales representative.*

# PA-CEDV

**PH, ORP, FREE CHLORINE, TOTAL CHLORINE, COMBINED CHLORINE AND TEMPERATURE**

- Controller CENTURIO POOL
- Dosing pump for acid VMS MF 03 10 (10 l/h)
- Dosing pump for chlorine VMS MF 02 15 (15 l/h)
- Filter NFIL
- Probe di pH EPHS
- ORP probe ERHS
- Temperature probe ETEPTCH18
- Free chlorine probe SCL3S/20
- Total chlorine probe SCL8/20
- Proximity sensor SEPR
- Probes holder PEF22R

**Optional:** also available with Centurio Pool controller

**Size:** 800x800 mm
Customized coloured background on demand.

# Advanced all-in-one systems

## PA-CEDT

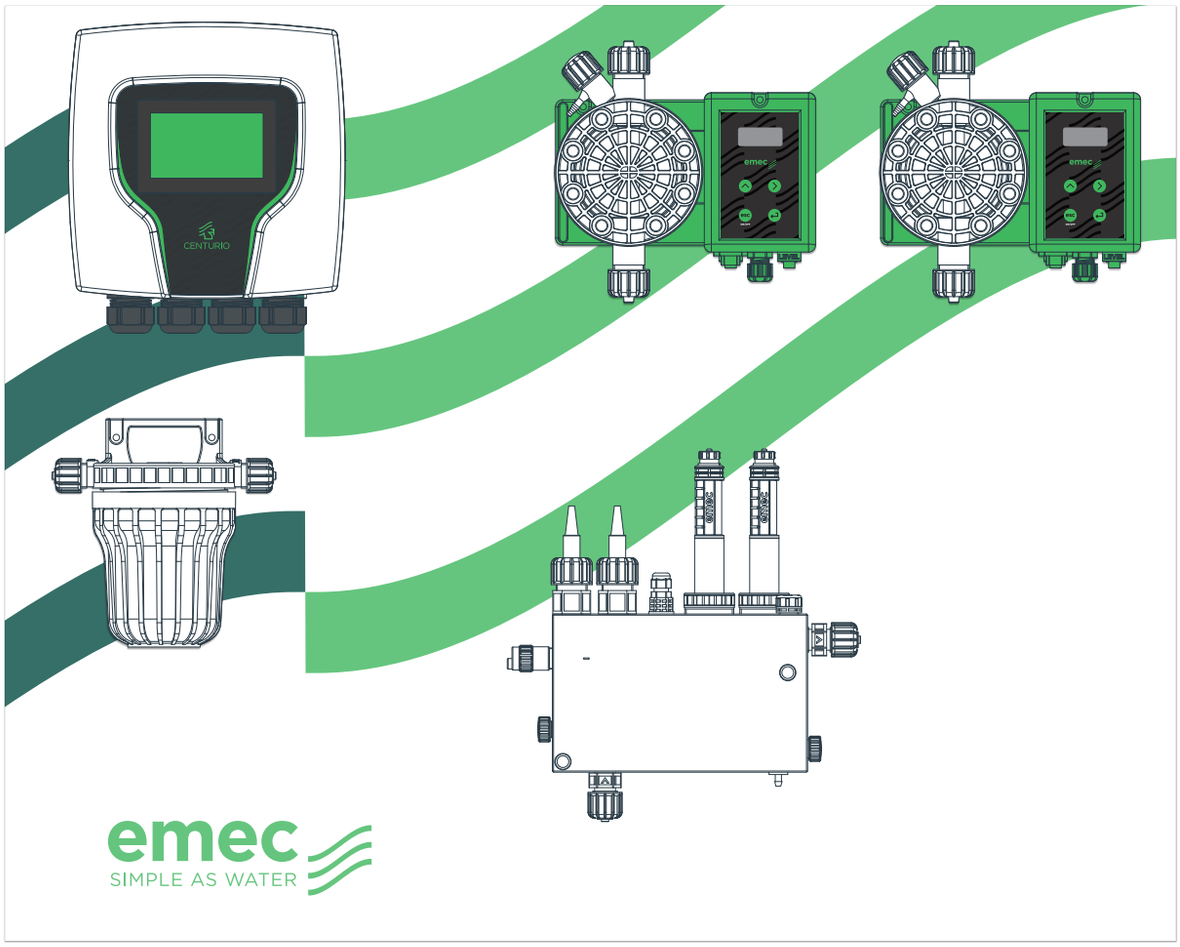


**PH, ORP, FREE CHLORINE, TOTAL CHLORINE, COMBINED CHLORINE AND TEMPERATURE**

- Controller CENTURIO POOL
- Dosing pump for acid TMS MF 03 30 (30 l/h)
- Dosing pump for chlorine TMS MF 01 50 (50 l/h)
- Filter NFIL
- Probe di pH EPHS
- ORP probe ERHS
- Temperature probe ETEPTCH18
- Free chlorine probe SCL3S/20
- Total chlorine probe SCL8/20
- Proximity sensor SEPR
- Probes holder PEF22R

**Optional:** also available with Centurio Pool controller

**Size:** 1000x800 mm
Customized coloured background on demand.

*The images contained in these pages are for illustrative purposes only. For more information on possible configurations, contact the sales office or your sales representative.*

# ACCESSORIES

**EPHS**
pH electrode for pressures up to 7 bar/70°C (3.5 bar/80°C).
0.8 m cable. Epoxy body.
Minimum 100 µS.

**ERHS**
ORP electrode for pressures up to 7 bar/70°C (3.5 bar/80°C).
0.8 m cable. Epoxy body.
Minimum 100 µS.

**BUFFER SOLUTIONS**
Buffer solutions for probes calibration.

**SCL8**
Total chlorine amperometric cell (organic and inorganic),
from 0 to 2 mg/l;
from 0 to 20 mg/l, pH and temperature compensated.

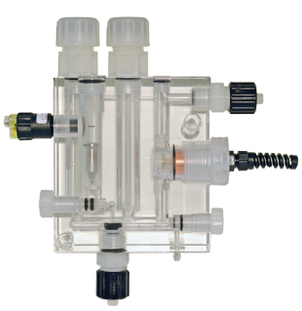

**ECL6 / ECL12**
Free chlorine / bromine amperometric celln(organic and inorganic),
from 0 to 10 mg/l.
Flow switch and flow adjustment. Electrodes holder for pH, Redox and temperature.
With proximity switch mod. SEPR. 6x8 fittings.
With LED light sold as option.

**SCL3S/20**
Free chlorine amperometric cell (organic and inorganic),
from 0 to 10 mg/l, pH and temperature compensated.

**ETEPT**
Temperature probe PT100 (0°C÷100 °C, max 10bar).
Suitable for LDxx, LDPHxx series instruments.

**PEF22R**
Holder for Chlorine, pH, Redox, free Chlorine, total Chlorine and temperature probes.
Provided type SEPR flow controller. With LED light sold as option.

# Accessories

**PEF1R**
Off-line probes holder for ECL1/2/3/8/9/10/11 and pH, Redox and temperature, with flow switch and regulation.
With proximity switch mod. SEPR. 6X8 fittings.
With LED light sold as option.

**NFIL**
Filter with cartridge. Washable. PET (60 µ). 6x8 fittings.
With LED light sold as option.

**EVLA**
Electrovalve for dry feeder (chlorine / bromine).
1/2" fitting.

**PEL**
PVDF in-line electrode holder for pH / Redox electrodes with 1/2" or 3/4" thread.
For "T" connection.

**NFIL CA**
Activated 5" filter with carbon filter cartridge. 6x8 fittings.
With LED light sold as option.

**NPED4**
Off-line electrode holder for EPH and ERH electrodes.
Epoxy Ø12 casing. Max temperature 50° C, max pressure 5bar with flow sensor, N.O. switch, 6x8 fittings.
With LED light sold as option.

**PELC**
PVDF in-line electrode holder for pH / Redox electrodes with 1/2" or 3/4" thread.
For saddle connection.

**SBR1/20**
Amperometric cell for bromine (reading range from 0 to 20 mg/l), pH and temperature compensated.

**MIXVN/8**
High speed mixer 1400 RPM. AISI shaft-PVC coated, different lengths available (630-730-830-930 mm). Marine impeller, diameter 70mm.

**MIXN/8**
Slow speed mixer 70/200 RPM. AISI shaft-PVC coated, different lengths available (630-730-830-930 mm). 3-blade impeller, diameter 150mm.

**MIXN/MAN**
Manual mixer.
PVC shaft, different lengths available (500-600 and 700-800 mm).
Impeller diameter 130 mm.

**MIX "PISTON"**
Manual mixer.
PVC shaft, different lengths available (500-600 and 700-800 mm).
Impeller diameter 130 mm.

**LASP**
Suction lances with level control, for tanks up to 25 liters.

**LASP**
Suction lances with level control, for tanks up to 1000 liters.

**LINIR**
1/2" injection lance for dosing sodium hypochlorite in hard water. Self cleaning. FKM B o-ring. PVC body.

**PVDF INJECTION VALVE**
PVDF made injection valve with 1/2" or 3/4" fittings.

# Accessories

**MF MULTIFUNCTION VALVE**
Multifunction valve (pressure, safety, antisyphon and bleed) 1/2” connections for different hoses diameters.
FKM B or EPDM o-ring. PVDF body.

**LEVEL PROBE with FOOT FILTER**
Level probe with REED TYPER CONTACT. High temperature resistant, not influenced by viscosity, opacity, conductivity or dielectric costant
(0 e 60°C).

**CHEMICAL TANKS & SAFETY BUNDS**
Chemical tanks made of polyethilene, UV resistant with safety bunds. For dosing pumps and mixers.

**CALCIUM HYPOCLORITE DOSING STATIONS**
Our chemical tanks can be assembled with:

- 1 Dosing pump (or 2 without mixer) - 1 mixer
- 1 water loading faucet
- 1 outgassing valve
- 1 or 2 suction lances
- 1 water purging faucet
- 2 level probes with filter (without mixer)

Assembling made with two dosing pumps must use a double-suction lance and KDPV kit for connecting both the pumps.

# ADVANCED REMOTE MONITORING AND CONTROL SYSTEM

# NIMBUS

**Online platform for remote control**

**NIMBUS is an online platform that enables remote monitoring and control of all parameters of compatible EMEC products, allowing interactive management of probes, instrument inputs, product levels, temperature and setpoints.**

## HOW DOES NIMBUS WORK?

All EMEC instruments equipped with an encoder or touchscreen and an Ethernet or 3G/4G connection are immediately connected and ready for use.

In addition to remote interaction, NIMBUS allows you to receive email notifications regarding alarms and the status of your instruments, based on various configuration options.

## ADVANTAGES

- Reduced on-site inspections and maintenance interventions
- Real-time status of network devices (probes, outputs, alarms and setpoints)
- Customisable reports including data from all plant instruments
- Charts, tables and activity logs downloadable to a PC (CSV format)
- Activity scheduling with automatic reminder notifications

## COMPATIBLE SYSTEMS

- PRISMA
- CENTURIO PRO /POOL /TOWER
- MTOWER
- WD
- LD / LDS
- WN
- WT
- VELON
- LD OSIN PLUS
- LOTUS

## KEY FEATURES

Nimbus has been developed to deliver a complete, intuitive and secure user experience: from interactive plant status visualisation to geolocation, from remote configuration to maintenance planning.

Thanks to advanced reporting tools, role-based access management, and the highest standards of security and data protection, Nimbus supports companies and teams in efficiently monitoring their infrastructure, streamlining daily operations and enhancing overall operational control.

**INTUITIVE AND CUSTOMIZABLE DASHBOARD**

**INTERACTIVE MAP WITH REAL-TIME MONITORING OF SYSTEMS AND DEVICES**

**BUILT-IN GEOLOCATION FOR ALL YOUR INSTALLATIONS AND DEVICES**

**GUIDED DEVICE REGISTRATION**

**REMOTE SETUP AND CONTROL, ANYTIME, ANYWHERE**

**SMART TEAM MANAGEMENT WITH PROFILED ACCESS LEVELS**

**INTEGRATED CALENDAR TO PLAN TASKS AND MAINTENANCE**

**DETAILES, CUSTOMIZABLE REPORTS AT YOUR FINGERTIPS**

**MULTILINGUAL PLATFORM**

**SECURE CONNECTION WITH STATE-OF-THE-ART ENCRYPTION**

**DATA MANAGEMENT IN COMPLIANCE WITH THE HIGHEST SECURITY AND PRIVACY STANDARDS**

NIMBUS

# Fast, simple and intuitive

## YOUR SMART ASSISTANT

### A MULTILINGUAL WEB PLATFORM

The user interfa-
ce is available in 34
languages

### MULTIPLE ACCESS LEVELS

Multiple users can be added to the system, with different access levels configurable for each plant.

### STATUS NOTIFICATIONS PUSH

Set up push notifications on the status of your installations.

## EVERYTHING UNDER CONTROL

Real-time display of all your plant parameters and monitoring of the status of all probes

## REAL-TIME MANAGEMENT

Real-time management and configuration of all your plant parameters

## REAL-TIME CHARTSE

Charts of all your plant parameters, based on both real-time data and stored data

# My Emec

All your systems in your hand

www.emecpumps.com
follow us
emec
Notifications
Search
Last Notifications
Alarm
Level Alarm
45 min ago
Warning
Level Warning
45 min ago
All Notifications
Pump status
Off
45 min ago
Warning
Hall sensor warning
45 min ago
Alarm
No input
45 min ago
Pump status
Stand-by
45 min ago
Working mode
Working mode changed to...
45 min ago
Home
Notification
Devices
Documents
Profile
Constant mode
15.00 L/h
50%
100%
10
TO REGISTER THE PUMP ON ERMES OPEN THE 'INFO' MENU (THE FIFTH ICON FROM THE LEFT) AND SCROLL DOWN TO 'ERMES-SERVER.COM'
PRISMA WIFI - EMEC TUTORIAL
emec - simple as water
Iscriviti
0 commenti
Ordina per
Aggiungi un commento...
EMEC Tutorial: PRISMA working modes
EMEC Tutorials
EMEC Brasil
FPV Dosing pump: assembly and handling
EMEC - UNIT STROKE CC/ST CALCULATION VIDEO...
Process of Plywood Making ' How Plywood is manufactured
EMEC: SCL Probe Commissioning
SCL3N AMPEROMETRIC CALIBRATING

emec®
SIMPLE AS WATER

cod. 20211400

EMEC S.r.l. Via Donatori di Sangue, 1 - 02100 Rieti - Italia
T. +39 0746 2284 1  F. +39 0746 2284 2
info@emec.it - www.emecpumps.com