This manual contains important information about safe installation and operation of the unit. Strictly comply with this information to avoid harming people or damaging property.

It is strictly prohibited to use this equipment with radioactive chemicals!

Before switching this instrument on, read this manual in its entirety. Keep the manual near the instrument for future reference.

High Pressure warning: this device operates at MAX 8 bar pressure. Do not attempt to modify / increase this parameter!

OPERATING INSTRUCTIONS FOR "LOTUS EASY" SYSTEM

Il biossido di cloro, come tutti gli agenti ossidanti, potrebbe produrre fenomeni di corrosione dell'impianto. Si consiglia di effettuare verifiche cadenzate e di trattare l'impianto con prodotti chimici specifici. Si consiglia, inoltre, di utilizzare nel punto d'iniezione del prodotto materiali resistenti al biossido di cloro.

Chlorine dioxide, like all oxidizing agents, could produce corrosion phenomena of the plant. It is advisable to perform cadenced checks and to treat the plant with specific chemical products. It is also advisable to use chlorine dioxide resistant materials at the point of injection of the product.

Le dioxyde de chlore, comme tous les agents oxydants, pourrait produire des phénomènes de corrosion de l'installation hydraulique. Il est conseillé d'effectuer des contrôles cadencés et de traiter l'installation avec des produits chimiques spécifiqu s. Il est également conseillé d'utiliser des matériaux résistants au dioxyde de chlore au point d'injection du produit.

Read carefully!

ENGLISH edition
R4-01-26

This manual contains important information about SAFE installation and operation of the unit. Read and retain for future reference.

Strictly comply with this information to avoid harming people or damaging property.

The information contained in this manual may contain inaccuracies or typographical errors.

The information contained in this manual is subject to change at any time without prior notice.

Descrizione Prodotto *Product Description*	Sistemi di disinfezione, serie LOTUS EASY *Disinfection systems, LOTUS EASY series*
Codici Identificativi Prodotto (i simboli "_" completano il codice del prodotto in base alla configurazione delle varianti) *Product Identification Codes* *(the "_" symbols complete the product code based on the configuration of the variants)*	**112 _ _ _ _ 1** **112 _ _ _ _ 1 _ _**

GENERAL NOTES ON SAFETY

During installation, testing and inspection it is mandatory to comply with the following management and safety instructions.

Safety

This manual contains basic instructions for installation, operation and maintenance. It is therefore mandatory for the installation technician and the equipment administrator to study the entire manual prior to installing and commissioning. The manual must be found near the generator at all times. It is also mandatory for the operator to consider the general rules listed in the "Safety standards" chapter as well as the specific safety instructions in the other chapters of this manual.

Warning

Some of the features described may not be available with the "LOTUS EASY" software release purchased. Or some functions are available but not described in this manual. In this case, contact your dealer for more information.

Symbols
In accordance with the European guidelines concerning the characterisation of special risks, all safety instructions in this manual are marked with the following symbols:

Danger

This symbol draws attention to the risks that may be encountered.
Failure to comply can lead to serious consequences for personal safety and damage to property.

Attention

This symbol draws attention to the problems that can be caused by incorrect equipment operation.

Additional notes

This symbol indicates additional important information.

PART ON THE DOSING PUMPS IN THE "LOTUS EASY" SYSTEM

Attention

The pump must only be used for dosing liquid products.
It should not be used in explosive atmospheres (EX).
It should not be used to dose flammable chemicals.
It should not be used with radioactive chemicals.

Use the pump only after installation.

Use the pump in accordance with the data and technical specifications on the label.

Do not modify or use differently from that indicated in the user manual.

Additional notes

Keep the pump protected from sun and rain. Avoid splashing water.

The power to the system must be immediately disconnected and the pump disconnected from the electrical outlet during any emergency within the environment where the pump is installed.

If you use particularly aggressive chemicals strictly comply with the regulations concerning their use and storage.

Always comply with local safety regulations.

The manufacturer of the dosing pump cannot be held liable for damage to persons or property caused by incorrect installation, improper or incorrect use of the dosing pump!

Install the dosing pump so that it is accessible at all times for maintenance purposes. Do not block the dosing pump area!

The unit must be controlled and powered by an external control system. Dosing must be interrupted if there is no water. Power must be interrupted if there is a malfunction.

Assistance and maintenance of the dosing pump and all its accessories must always be performed by qualified personnel.

Before any installation and maintenance:

SYSTEM MUST BE INSTALLED IN A DEDICATED ROOM

- **carefully read the chemical characteristics of the product to be dosed and refer to the Safety Data Sheet of the product;**
- **wear the most suitable PROTECTIVE EQUIPMENT;**
- **drain the connection hoses of the dosing pump;**
- **carefully wash the hoses that have been used with particularly aggressive materials.**

General safety regulations

The manual describes the proper use of the "LOTUS EASY" generator.

Danger

Improper use of the generator compromises its safety function and that of the other devices connected to it and therefore such use is strictly forbidden.

Installation and maintenance must only be carried out by authorised technicians.

Maintenance repairs should only be carried out only by the manufacturer or by technicians authorised by the manufacturer. Interventions or alterations to the device that are not in accordance with the provisions of this manual, with respect to regular maintenance, shall be considered improper and render any product warranty null and void.

The operator is responsible for compliance with safety-related local regulations.
The device must be accessible at any time for operation and maintenance.
Before activating the dosing pumps, remove the pressure from the pump heads.
Before starting maintenance, drain and thoroughly wash the tested pumps.
Pay attention to the chemical safety data sheets!
Wear protective clothing when you must handle unknown or hazardous chemicals.

Placing of warning labels

In case there are no other special national regulations or directives, place the following symbols and labels beside the entrance of the plant operation room:

Danger! Toxic substances
Prohibition!

No Fire, naked light and smoking
Chlorine dioxide

Access only for authorized personnel!
Sodium Chlorite - $NaClO_2$

Additional notes

For proper compliance with European regulations concerning the use of this equipment with hazardous chemicals, refer to EU directives DIN 939 (HYDROCHLORIC ACID) and DIN 938 (SODIUM CHLORITE)

Operating safety instructions

Danger

Strict compliance with all national and local regulations is required when using the "LOTUS EASY" generator. The operator is responsible for compliance with safety-related local instructions.

The generator must be installed and operated in accordance with the instructions in this manual.

It is forbidden to use installation materials that are not approved by the manufacturer or supplier.

The generator can only be used with appropriate safety valves approved by the manufacturer. Failure to comply with this rule leads to be loss of the right to any kind of warranty!

Before operating the system, turn off the pressure from all parts of the system.

The system must never work with the valves closed as there lies the risk of the flexible hoses or rigid hoses bursting.

Supplemental power supply breaker must be installed OUTSIDE the room where system is installed. Disconnect the power supply before opening the controller container.

Additional notes

Pay attention to all the national regulations during installation.

The system must not be installed outdoors.

The system must be protected from unauthorised access.

The place where the unit is installed must be protected from direct sunlight and frost and should be well ventilated.

Places with temperatures below 10°C must be provided with appropriate systems that enhance the temperature.

It must be possible to transport the chemical containers to the system without any restriction.

An emergency exit is strictly required!

The system must be mounted on a vertical solid wall without stress.

The system must be mounted in such a way as not to cause vibrations.

Make sure free access from all sides is possible for operation and maintenance!

A valve and an attachable floor draining duct must be set up for any spilled chemicals to be eliminated without any risk.

Safety regulations in case of chemical spills I

Danger

If the odour of chlorine dioxide (a penetrating odour similar to that of chlorine) can be smelt, access is allowed only with the required personal protective equipment.

If the odour of chlorine dioxide is smelt, immediately turn off the system from a safe position, for example with an emergency stop switch away from the system

In rare error cases, the hazardous ClO_2 solution can leak. For example, install a gas detector that disables the system in case of a leak of ClO_2 and triggers an alarm that is recognised at a distance.

When using hazardous substances, keep in mind that their latest safety data sheets provided by the manufacturers are available. The safety data sheets indicate the measures to be adopted. Since the risk potential of a substance can be evaluated at any time based on newly learnt knowledge, the safety data sheet should be checked regularly and replaced if necessary.

The system administrator is responsible for the availability of the updated version of the safety data sheet and the preparation of the risk assessment of the relative workstations.

The administrator generates hazardous substances with this system.

The administrator is obliged to adjust the operating instructions according to the system if any recent knowledge concerning the risks of a particular hazardous substance is learnt and must include how to avoid them or if national regulations contain different provisions from those specified in the instruction manual supplied.

Danger

BYPASS LINE SAFETY INFORMATION

The reactor can explode:

• In case of an uncontrolled sucking of the chemicals into the reactor, caused by a vacuum in the bypass-line and a simultaneous formation of gas/water mixed phases, chlorine dioxide can gas out. Under adverse circumstances, the critical gas concentration of 300 g/m3 is exceeded and an explosion of the reactor can occur. Take appropriate measures to ensure that the bypass line of the LOTUS EASY system does not become subject to a vacuum.

• Particles in the bypass water could block the flow meter. This can lead to an unacceptably high concentration of chlorine dioxide. If a bypass line is not completely full with water, a critical gas phase can form, resulting in an explosion in the bypass line. Install a dirt-trap filter in the bypass line, if required.

Function: The bypass line is either fed from the main water supply or separately. The purpose of the bypass line is to dilute the concentration of the chlorine dioxide solution coming out of the reactor from approximately 20 g/l (= 20,000 ppm) to approximately 0.1 - 1 g/l (= 100 - 1000 ppm) and to transport this solution to the point of injection.

Safety regulations in case of chemical spills II

Attention

The following personal protective equipment is required to access the "LOTUS EASY" device

Face shield
Rubber or plastic boots
Protective gloves (ClO_2 sealed model)
Protective apron
Full face respirator

The composition and the type of personal protective equipment required may vary from one country to another and change over time.

Danger

If you come in contact with the acid: See the "Acid CE safety data sheet" of the supplier.

If you come in contact with the chlorite: See the ''Chlorite CE safety data sheet'' of the supplier.

If you come in contact with the ClO_2 solution or the ClO_2 gas: immediately remove the clothes that have come in contact with the chlorine dioxide or with the liquid solution, wash the skin thoroughly with soap and plenty of water. Splashes in the eye must be washed with running water for several minutes while keeping the eyelid wide open. If you have inhaled chlorine dioxide move to a place where there is fresh air, lying down in a position of absolute rest and protected from temperature changes. Consult a doctor immediately even if the affects do not appear immediately. If necessary, organise rapid transport to the hospital.

Orange-yellow ClO_2 gas has leaked: immediately clear the environment and disconnect the power supply, for example, from the emergency stop switch. Use complete protective equipment and water spray for the gas to settle.

Orange-yellow ClO_2 solution has leaked: immediately clear the environment and disconnect the power supply, for example, from the emergency stop switch. Wear protective equipment and pour a ClO_2 sodium thiosulphate solution then dilute with water and eliminate into the drain.

An incorrect dilution or with concentrated HCl in the HCl tank and with dosing pumps that have already pumped the concentrated chemicals to the reactor: immediately clear the environment and disconnect the power supply, for example, from the emergency stop switch. Alert the fire department and inform them of the risk of explosion due to concentrated ClO_2. The ClO_2 gas can explode even after hours!

Storage, transport and repairs

Additional notes

In case of repairs, return the unit after having cleaned it and having washed the hydraulic components. Attach the material decontamination declaration to be sent for repairs.

The unit can be damaged due to non-compliant storage or transport.

Store or transport the unit adequately packed, preferably in its original packaging.

Always follow the storage conditions when transporting or storing, even when the unit is packed.

Although packed, always protect the unit from moisture and the action of chemicals.

Danger

Serious malfunctions at the plant or corrosion damages in the pipe-work of the treated water should be possible in case the following requirements to the water – the chlorine dioxide is produced for – as well as for the dilution water are not fulfilled:

Temperature: 10 – 30° C
Pressure: 5 bar max operating
Relative Humidity: 5% t ≤40 °C; 70% at 45 °C (non condensing).
Water quality: Free of iron, manganese and particles, non-corrosive.

The following directions are based on a concentration for chlorine dioxide of 0.4 mg/l to prevent pipe-corrosion:

The pH-level should be always higher than pH 6.5. It should be controlled during operation.

In case the carbonate hardness is lower 1.1° dH or the alkalinity is lower 0.4 mMol/l the dosing of suitable chemicals for the increase of the pH-level is required.

Warning!
The reactor can explode

In case of an uncontrolled sucking of the chemicals into the reactor, caused by a vacuum in the bypass-line and a simultaneous formation of gas/water mixed phases, chlorine dioxide can gas out. Under adverse circumstances, the critical gas concentration is exceeded and an explosion of the reactor can occur. Take appropriate measures to ensure that the bypass line of the LOTUS system does not become subject to a vacuum.

Introduction

The chlorine dioxide generator named "LOTUS EASY" is used to produce liquid chlorine dioxide. This disinfectant kills all bacteria, germs, viruses and fungi very rapidly and works at very low concentration. The generator works according to the hydrochloric acid - chlorite process and uses diluted chemicals such as hydrochloric acid (HCl 9%) and sodium chlorite ($NaClO_2$ 7.5%) in accordance with the following chemical formula:

Hydrochloric acid + Sodium chlorite = Chlorine dioxide + Sodium chlorite + Water

$$4\ HCl + 5\ NaClO_2 = 4\ ClO_2 + 5\ NaCl + 2\ H_2O$$

In the process, each chemical is pumped with a certain proportion in a reactor, which works pressurised, by means of two dosing pumps. The system can work proportionally with a contact water meter, a current signal or constant..

WARNING
follow European directive DIN EU 939 concerning HYDROCHLORIC ACID
follow European directive DIN EU 938 concerning SODIUM CHLORITE
follow Pressure Equipment Directive (97/23/EC)

Warnings for high pressure device

This machine may cause loss of life, severe bodily harm, or property damage if not correctly installed, operated and maintained. Read and understand all guidelines given in this bulletin before attempting to open, operate or service this machine. Failure to follow these guidelines and observe every precaution will result in malfunction and could result in catastrophic failure. Misuse, incorrect assembly, or use of damaged or corroded components can result in high-velocity release of the end closure. We recommend that only a qualified technician experienced in servicing high-pressure hydraulic systems, open, close and service this machine.

The reactor can explode: If the chlorine dioxide solution in the reactor becomes subject to a vacuum, it can explode. Hence the bypass line should be installed so that it is impossible for a vacuum to arise, not even when the plant is stand-by or in the case of a fault.

Risk of explosion in the bypass line: If the dosing remains switched on when there is no water flow, it can lead to an unacceptably high concentration of chlorine dioxide in the bypass line. If in addition, the bypass line is not completely full with water, a critical gas phase can occur, resulting in an explosion in the bypass line.

Instrument main components

The "LOTUS EASY" instrument consists of the following main components.

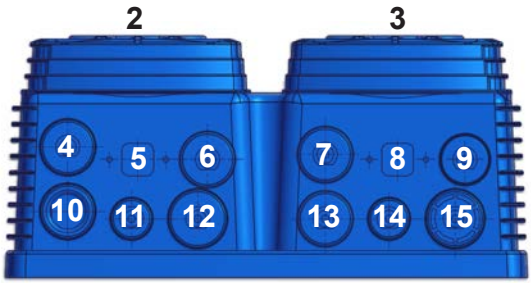

1) "LOTUS EASY" control and management instrument

2) Hydrochloric acid dosing pump

3) Sodium chlorite dosing pump

4) BYPASS Input

5) mA Input (3- Black ; 2+ Red)

6) n/a

7) Pulse sender Water Meter input

8) Alarm output (3 ; 2)

9) n/a

10) Power Supply

11) Hydrochloric acid Level input

12) Flow sensor for H.Acid (SEFL)

13) Standby

14) Sodium chlorite Level Input

15) Flow sensor for S.Chlorite (SEFL)

System main components

The "LOTUS EASY"panel consists of the following main components. Panel size is 600 x 800 mm.

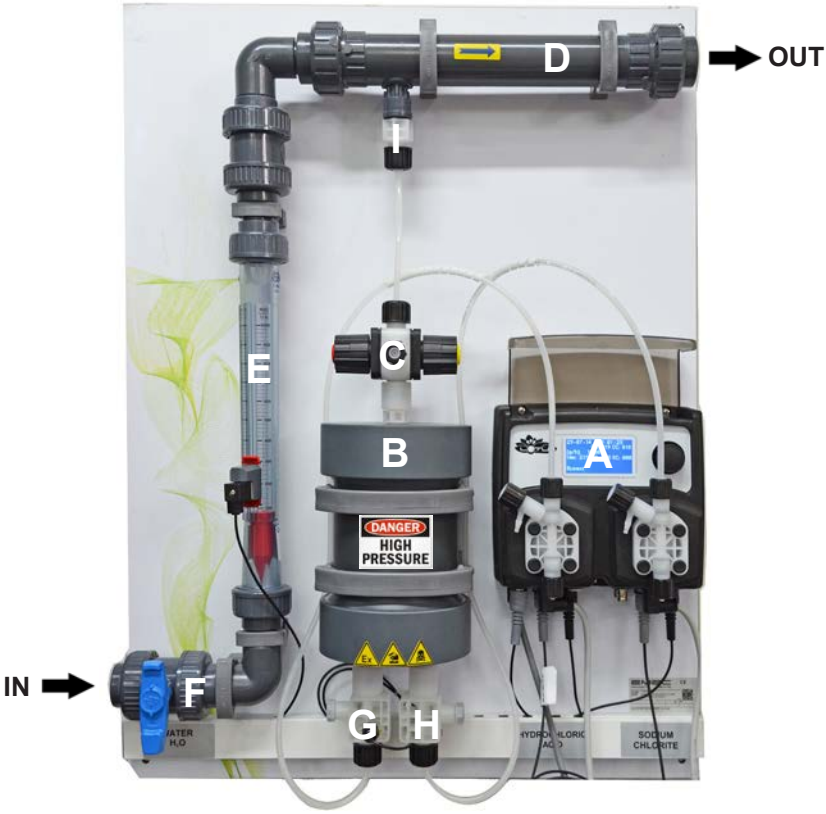

A) "LOTUS EASY" control and management instrument (5bar - 2l/h pumps: left pump for h.acid - right pump for s.chlorite)

B) Reactor chamber (max 8 bar)

C) Multifunction Valve Mod. MF

D) Static Mixer (product output to the plant)

E) Flow-meter "BYPASS" with flow switch

F) Water input

G) Hydrochloric acid input to the reactor chamber

H) Sodium chlorite input to the reactor chamber

I) Injection valve with spring made of Polytetrafluoroethylene (warning: injection point is under pressure)

Hydraulic connections

The hydraulic components to be installed for the pumps to properly work are:

Suction Hose with level probe and bottom filter
Delivery Hose with injection valve
Discharge hose

Suction Hose

Unscrew the suction ring nut completely on the pump body and draw the components required to assemble the hose: tightening ring nut, Holding ring and hose holder.

Assemble as shown, making sure that the hose is fully inserted on the hose holder.

Tighten the hose on the pump body by tightening the ring nut with your hands.

Connect the other end of the hose to the bottom filter using the same procedure.

Figure A

Delivery Hose

Unscrew the suction ring nut completely on the pump body and draw the components required to assemble the hose: tightening ring nut, Holding ring and hose holder.

Assemble as shown, making sure that the hose is fully inserted on the hose holder.
Tighten the hose on the pump body by tightening the ring nut with your hands.
Connect the other end of the hose to the injection valve using the same procedure.

Discharge hose

Insert one end of the Discharge hose on the drain hose connection as shown in figure A (page 12).
Place the other end directly into the tank containing the product that is to be dosed. In this way, the liquid that leaked during the priming phase will return into the tank.

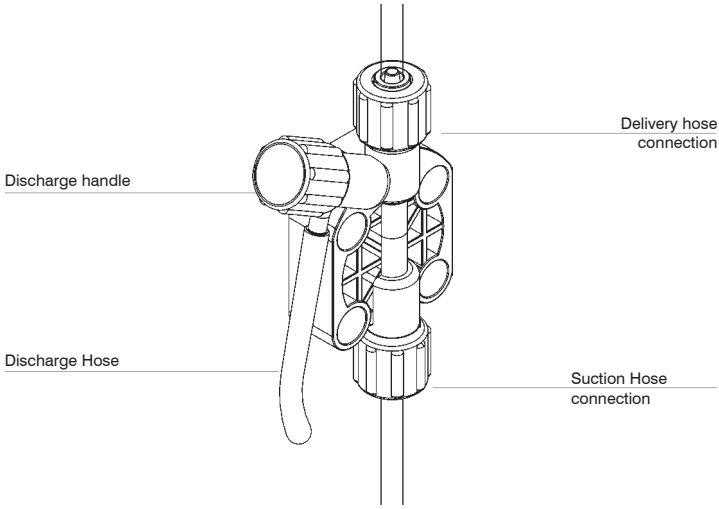

Self-venting pump body (chlorine dioxide dosing pump)

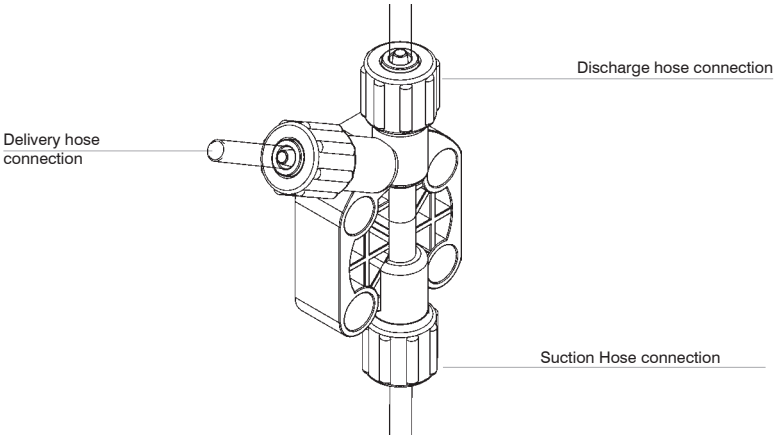

Note:

- the suction, delivery and discharge valves are DIFFERENT.
- the delivery and discharge hoses are of the same type.
- the Discharge hose can be slightly bent to be inserted into the tank of the product that is to be dosed.

Multifunction Valve Mod. MF

Multifunction valve is a 4 functions device. It works as a "Anti-syphon valve", "Safety Valve" and "Bleed Valve". Device can be set to operate at selected pressures using knobs "S" and "A".

Warning: Never turn knobs out of range!
Warning: Always connect discharge hose to multifunction valve!

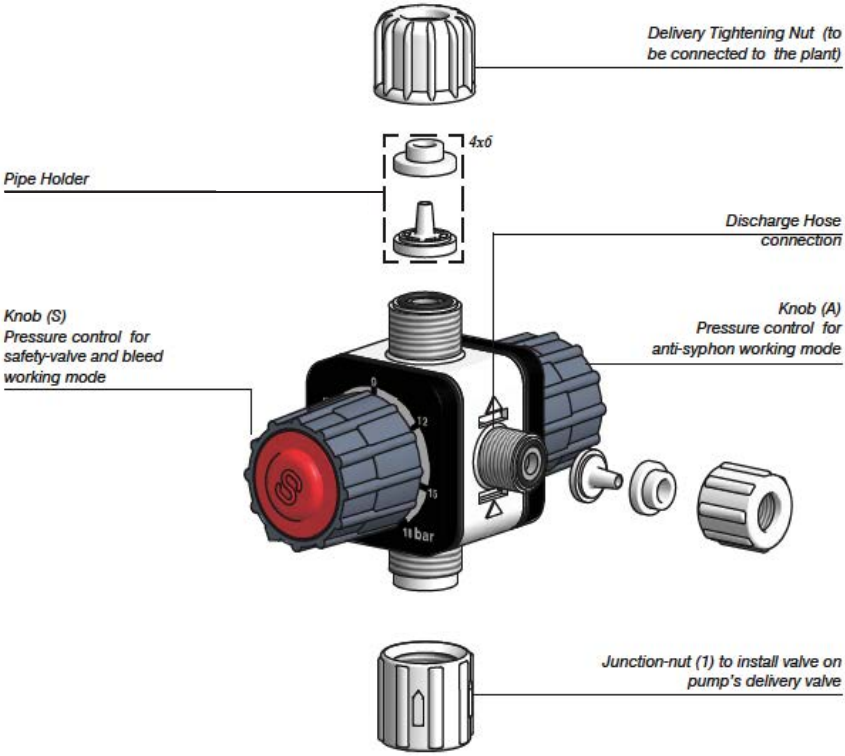

Multifunction valve can modify the flow rate of the metering pump connected.
Verify the pump flow rate after installing the multifunction valve.

Multifunction Valve Mod. MF

Multifunction valve installation:

-Unscrew junction-nut (1) from multifunction valve.
-Remove the hose connection kit from pump's delivery valve.
-Put junction-nut (1) on pump's delivery valve. Be careful to the arrow direction on junction- nut(1) body.
-Place multifunction valve (turning discharge side as desired) on junction nut (1).
-Screw junction-nut(1) by turning it clock-wise until it's completely locked.

Pressure valve operating mode:

"Pressure valve operating mode" keeps always closed the valve until is reached a specific pressure value to the input. Pressure value may be set using the above procedure.

-Pull knob labeled "A" until it produces a "click".
-Regulate pressure (bar) on desired value (within a range from 0 to 5bar).
-Press the knob labeled "A" until it produces a "click".

Anti-syphon valve operating mode:

Anti-syphon operating mode avoid that dosing product goes through the injection valve when the pump is not dosing because a negative pressure has been produced on the injection valve.

-Pull knob labeled "A" until it produces a "click".
-Regulate pressure (bar) on 0bar.
-Press the knob labeled "A" until it produces a "click".

Note: If product's tank is installed above the injection valve adjust knob (A) calculating the height (0,1bar per meter and adding 1bar).

Safety-valve operating mode:

Safety-valve operating mode activates product discharge through discharge hose when is over-reached a specific pressure value (max 18bar). Manual discharge feature is also available.

Automatic product purge on over-reached pressure value:

-Pull knob labeled "S" until it produces a "click".
-Regulate pressure (bar) on desired value (within a range from 0 to 18bar).
-Press the knob labeled "S" until it produces a "click".

Manual product purge:

-Pull knob labeled "S" until it produces a "click".
-Turn knob on "BLEED".
-Regulate the pump flow knob on 0 (zero).
-Press the knob labeled "S" until it produces a "click".
-Wait until purge ends then rotate knob back on previous position.
-Press knob until it produces a "click".

Browsing the menus

At the top right of the "LOTUS EASY", there is a wheel used for menu browsing and programming the instrument. The wheel can be rotated in both directions to move the cursor through the menus and pressed to confirm/enter selection.

NOTE: When changes have been made press the wheel on "OK" to save and exit from the sub-menu. Some menus show "ESC" followed by a saving menu.

Mode selection (see page 18 to choose instrument working mode)

Production (use this menu to set maximum gr/h production)

Water Meter (see working mode at page 18)

System Settings (see page 19 to manage inputs and password)

Instrument reset (revert instrument to default settings)

International (setup time / date / language)

Calibration Pump (see page 20 for setting pumps capacities)

Reactor Priming (see page 23 for testing pumps required time to fill reactor tank)

Exit (to main screen)

Additional notes

Access to main menu is restricted to ADMINISTRATOR ONLY
Default ADMIN password is 0916

Users with restricted access may access to PRODUCTION menu only
Default USER password is 0000

Main screen

Proportional mA mode

Local Date & Time

Production g/h - % setpoint Production g/h
mA input read value

Main Menu - Priming** - Stat***

Costant Mode

Prming** see page 21
Stat***see page 24

Proportional mode

Local Date & Time

live ppm production - mc/h read by flow meter

overall dioxide production

Main Menu - Priming** - Stat***

Turn wheel for browsing through system status

Click wheel to enter passcode and go to main menu

Configuration and screens may differ; you may download the latest version of this manual from the manufacturer's website or by contacting Technical Support. See page 22 for system messages and warning explanation.

MODE SELECTION

Within main screen press the wheel and enter ADMINISTRATOR password. Select "Mode Selection". Confirm changes by moving cursor to "OK" and pressing the wheel.

Before to configure a working mode please verify chlorine dioxide (grams per hours) value set within "PRODUCTION" menu

Constant mode

This mode allows to produce chlorine dioxide based on % value. This vallue is referred to "grams per hour" quantity set into "PRODUCTION" menu. Below is shown [g/h] value according to set %.

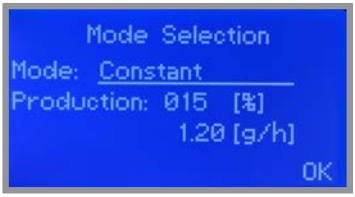

Proportional WM

This mode allows to produce chlorine dioxide based on production [mg/l] and water flow read by the external pulse sender water meter. To edit water meter parameters move wheel on "OK" and press it.

Note: this menu can be set also within "WATER METER" menu

[mc]: total amount of cubic meters passed through water meter (totalizer)

FM input P/L: water meter counter mode (pulses per liter , liters per pulse, 0/4-20mA)

RST TOT: totalizer reset

TIME OUT: countdown to alarm since the water meter no longer receive pulses.

Proportional mA

This mode allows to produce chlorine dioxide proportionally to mA read from "mA input" and % values set. For each mA field set the % value according to value set into "PRODUCTION" menu. Note: a 0% value is mandatory for at least one field.

E.g.: set 0mA at 15% and 20mA to 0%. (note: both values may be different from zero) According to value set into "PRODUCION" menu (8 g/h) the g/h fields will refer to its % value:15% of 8g/h is 1.20g/h

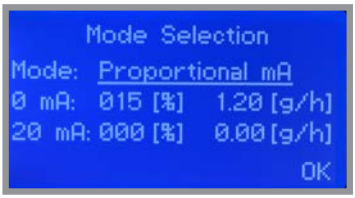

SYSTEM SETTINGS

Within main screen press the wheel and enter ADMINISTRATOR password. Select "System Settings". Confirm changes by moving cursor to "OK" and pressing the wheel.

Use this menu to set contact working mode for each level input, bypass and standby (or gas detection) and admin / user passwords.

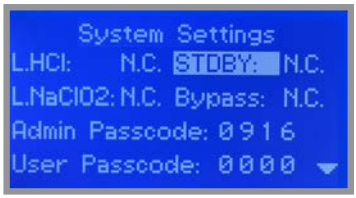

L.HCL: contact type for chloridric acid level probe. Choose between N.C. (normally closed) contact type or N.O. (normally open) contact type.

LNaCLO2: contact type for sodium chlorite level probe. Choose between N.C. (normally closed) contact type or N.O. (normally open) contact type.

STDBY: contact type for STANDBY contact. Choose between N.C. (normally closed) contact type or N.O. (normally open) contact type. STDBY contact can be also disabled.

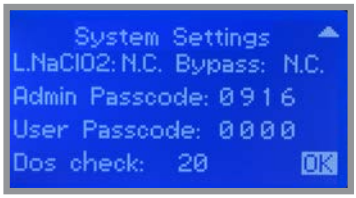

Bypass: contact type for flow detection. Choose between N.C. (normally closed) contact type or N.O. (normally open) contact type.

Admin Passcode: 4 numbers code required to access all menus
User Passcode: 4 numbers code to access "production menu" only

Dos Check: required missing pulses from SEFL (flow sensor) before to generate an alarm

CALIBRATION PUMP

Within main screen press the wheel and enter ADMINISTRATOR password. Select "Calibration Pump". Confirm changes by moving cursor to "OK" and pressing the wheel.

This function allows the calibration of the "Acid" and "Chlorite" dosing pumps based on strokes capability. To calibrate, proceed as follows:

1. Choose which pump to calibrate by moving cursor on ACID or CHLORITE then press the wheel

2. Lay the tube of pump's discharge within a graduated Beaker

3. Move cursor on Start, then press the wheel.

4. Wait until the end of the 100* strokes

5. Measure the product in the Beaker

6. Enter measured quantity in ml [ml field].

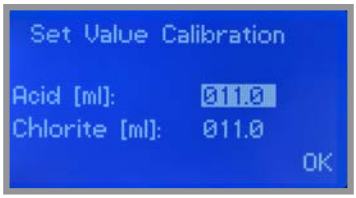

The instrument will calculate the cc/s that the pump is able to produce.

7. Move cursor on OK and press the wheel to save settings.

*this number can't be edited. Please contact technical assistance for further information

PRIMING

Within main screen press the wheel and enter ADMINISTRATOR password. Select "PRMING". Confirm changes by moving cursor to "OK" and pressing the wheel.

This function allows to prime (load chemical into pump head) "Acid" and "Chlorite" dosing pumps.

1. Connect all hoses into proper places (delivery hose, suction hose and outgassing hose).

2. Open outgassing valve for required pump

3. Choose which pump to prime by moving cursor on ACID or CHLORITE then press the wheel

4. Move cursor on STK 000/000 and enter required strokes* for priming.

4. Move cursor on Start, then press the wheel.

5. All air inside the pump head will exit through the outgassing outlet. When product will leak from it, close immediately the outgassing valve.

6. End procedure by moving cursor on EXIT, press wheel to return to main screen.

***Usually 20 strokes are needed when suction hose is placed at 1.5mt height from tank bottom**

STATUS MESSAGES

During working mode the instrument may show warning messages in main screen. See below table to better understand and fix them.

Shown Message	EXPLANATION / What to do
STANDBY or GAS DETECTION*	Contact status has changed
LEVEL ACID or LEVEL CHLORITE*	Contact status has changed, this usually means low chemical
SEFL ACID or SEFL CHLORITE*	Flow sensor didn't receive any signal from pump (see "DOS CHECK" in SETTINGS menu)
BYPASS*	Contact status has changed
TIMEOUT*	Flow meter didn't send any signal to LOTUS EASY (see "WATER METER MENU" for settings)
OVERFLOW	Pumps are working at their maximum capacity, check production ("PROPORTIONAL MODE" only)
VSUPPLY OUT OF RANGE*	Power supply exceeded working range - from 185 to 275 VAC (check power supply)
**this alarm condition must be fixed in order to return to normal working mode!*	

REACTOR PRIMING

Within main screen press the wheel and enter ADMINISTRATOR password. Select "REACTOR PRMING". Confirm changes by moving cursor to "OK" and pressing the wheel.

This function allows to test "Acid" and "Chlorite" dosing pumps while filling main reactor. Set seconds required based on pumps capacity and reactor tank size. Press start to begin procedure and STOP when reactor is full (liquid within hose connected to injection valve). If not press STOP and increase seconds to fully accomplish reactor priming.

STATS

This menu shows statistics for both acid and chlorite pumps (liters or gallons dosed) and m/c or gallons passed through the pulse sender water meter. To reset these values move cursor on "Reset: NO", click, rotate wheel, choose YES, click wheel, move on EXIT and confirm changes.

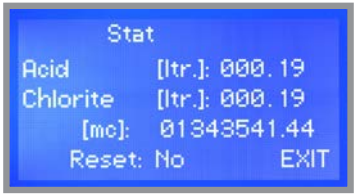

Technical Information

Power supply: 100÷240 VAC 50/60Hz

Power rating: 32W

Installation Class: I

Environment Relative Humidity 5% t ≤ 40°C; 70% at 50°C (non condensing)

Environment Temperature: 10 ÷ 30°C

Chemical Temperature: 0 ÷ 50°C

Reactor chamber max pressure: 8bar

Pollution Level: 2

Packaging and Transporting Temperature: -10 ÷ 50°C

Protection degree: IP65

Supplemental power supply breaker must be installed OUTSIDE
the room where system is installed.

Index

Safety	**page 3**
Introduction	page 10
Instrument main components	page 11
System main components	page 12
Hydraulic connections	page 13
Browsing the menus & main screen	page 17
Mode selection	page 18
System settings	page 19
Calibration pump	page 20
Priming	page 21
Status messages	page 22
Reactor Priming	page 23
Statistics	page 24
Technical Information	page 26
Index	page 27

Information on this manual may contain technical inaccuracies or typographical errors.
The information contained may be changed at any time without prior notification or obligation.

PRECAUTIONS RELATING TO DIRECTIVES, REGULATIONS AND STANDARDS

§ CE/EU and UKCA marking

We guarantee that this product meets the essential requirements of the applicable Directives and Regulations based on the following specifications. Please carefully consider the following specifications for use of the product in European Union member countries and the United Kingdom.

• CE/EU harmonized directives and standards

Directives
DIRECTIVE 2006/42/EC
DIRECTIVE 2014/35/EU
DIRECTIVE 2014/30/EU
DIRECTIVE 2011/65/EU
DELEGATED DIRECTIVE (EU) 2015/863

Harmonized standards
EN ISO 12100
EN 809
EN ISO 20361
EN IEC 61326-1
EN 61010-1
EN IEC 63000

• UKCA harmonized regulations and standards

Regulations
2008 No. 1597
2008 2016 No. 1091
2016 No. 1101
2012 No. 3032

Harmonized standards
BS EN ISO 12100
BS EN 809
BS EN ISO 20361
BS EN IEC 61326-1
BS EN 61010-1
BS EN IEC 63000

Disposal of end-of-life equipment by users

This symbol warns you not to dispose of the product with normal waste. Respect human health and the environment by giving the discarded equipment to a designated collection center for the recycling of electronic and electrical equipment. For more information visit the online site.

When dismantling a pump please separate material types and send them according to local recycling disposal requirements. We appreciate your efforts in supporting your local Recycle Environmental Program. Working together we'll form an active union to assure the world's invaluable resources are conserved.