ECORR

EN

OPERATION MANUAL

ECORR

ANTICORROSION PROBE

1. Introduction

The ECORR corrosion sensor measures the metal corrosion rate in an aqueous environment based on the principle of linear polarization resistance (LPR). A small polarization DC voltage is applied to two test metal electrodes and the resulting current is measured by the sensor. The polarization resistance value is calculated from the measured current and the applied polarization voltage. The metal corrosion rate in the unit of thousandths of inch per year (or mils per year, MPY) is then determined as:

Equation 1. $MPY = B/R_p$,

where R_p is the polarization resistance (LPR) and B the proportional constant.

To calculate Rp originated from the electrochemical reaction at the metal water interface, the ECORR sensor subtracts the solution resistance Rs due to the test solution conductivity from the total resistance measured between the two test electrodes. The ECORR sensor accurately measures the test solution conductivity using the two test electrodes and the bipolar pulse technique, which has been successfully used in other conductivity sensors and handheld meters.

A challenge of using the LPR method to measure corrosion rate below 0.01 MPY is to measure electric current in the range of pico and nano-amperes. The ECORR sensor adapts a range of techniques that are practiced in our fluorometers where low pico ampere current is measured. These techniques include electromagnetic interference shielding, special analog circuit designs, and digital signal processing.

The proportional constant B has a theoretical value for a given metal type and size. The ECORR assumes B equal to 1.24 MPY·Ω for a 5 cm^2 mild steel electrode, which is a typical value that has been used in many LPR corrosion researches. This proportional constant may be also referred as to the alloy factor of the test metal and normalized to 1.0 for the steel electrode for convivence. It can be adjusted by the user to account for variations in a real application environment.

To determine the corrosion situation of real process equipment is not a simple matter. The corrosion rates for various metal surfaces contacting aqueous fluids in a process depends on many parameters, including the corrosivity pertaining to the chemistry of the aqueous fluid, physical parameters such as temperature and the velocity of the fluid, and the metallurgical composition of the process equipment itself. Because of this, the corrosion rate measured by the ECORR should not be used alone to predict or assess the real corrosion rate of the process equipment. Nevertheless, the science of using the LPR technique to quantify the corrosion rate has been well established. The corrosion rate measured by the ECORR sensor can be used to understand the corrosivity trend of the aqueous fluid over a period and its correlation to changes in the process parameters.

Measuring corrosion rate using a weight loss corrosion coupon is still widely practiced in many industry applications. LPR is an instantaneous method compared with the corrosion coupon method. It can indicate a change in corrosion rate in a time scale of a few minutes. In theory, a time averaged corrosion rate measured by the LPR sensor should agree with that from the weight loss coupon method if both are practiced according to the common practices known in the industry. For monitoring mild steel corrosion

rate in an industrial cooling water system, one could also treat the LPR metal electrode itself as the weight loss corrosion coupon, and compare the corrosion rate calculated from the weight loss of the electrode to the averaged LPR corrosion rate in order to calibrate the LPR corrosion rate by adjusting the alloy factor.

The electrochemical noise measurement has long been used to quantify the localized corrosion or pitting corrosion rate. The ECORR sensor measures the short circuit electric current flowing through the electrodes between the two LPR measurements. The sensor first applies a signal process algorithm to remove high frequency noise in the acquired electrochemical current data for a period of 3 minutes and then calculates the standard deviation of the processed data set. The standard deviation calculated is scaled to generate a localized corrosion index. In such a scaling, the index value for a 304-stainless steel electrode immersed in a 10% ferric chloride solution at 72°F is arbitrarily defined as 100. The real time electrochemical current noise data are graphically displayed in the display panel, an optional item that can be purchased separately. With the graphic trend, the noise pattern and magnitude can be easily analyzed visually.

2. Specification

	ECORR	
Power Supply	24 V 2W	
Output	Isolated RS-485 MODBUS and two 4-20 mA	
Data Storage	N/A	
Dimensions	11.1 inch (281.5 mm) long, 0.9 in (23.0 mm) diameter lower portion, 1.7 in (43.0 mm) upper portion	
Weight	687 g	
Cable Length	5 ft. (1.5 m), extension cable available	
Range, general corrosion	0.001 - 10 MPY	
Range, localized corrosion	0 – 100 (304 stainless steel in 10% ferric chloride as 100)	
Conductivity Compensation	10 - 10,000 µS/cm	
Sample Temperature	-20 - 50°C	
Reading Interval	1 min, 2 min, 3 min (default), or 30 min	3 min, or 30 min, or 60 min (default)
Resolution	0.001 MPY	
Alloy Factor	0 – 3 (1 as default)	
Installation	Flow cell with 1-inch NPT	
Enclosure Material	304 stainless steel	
Working Pressure	Up to 100 psi (7 bar)	
Temperature	Working: -10 - 50 °C Storage: -20 - 70 °C	
Protection	IP65	
Regulation	CE	

3. Unpackaging the Instrument

Remove the instrument and find the standard accessories from the shipping container as listed below. Inspect each item for any damage that may have occurred during shipping. Verify that all accessory items are included. If any item is missing or damaged, please contact your dealer / reseller.

4. Installation

The ECORR sensor is shipped without the electrodes installed. A pair of copper and mild steel electrodes are included in the package. Remove the O-rings in the electrode package and place an O-ring to each threaded rod on the sensor. Fasten the electrodes to the threaded rods to slightly compress the O-ring on the bottom of the threaded rod. Clean the electrodes with isopropanol to remove any oil or other foreign materials on the electrode surfaces.

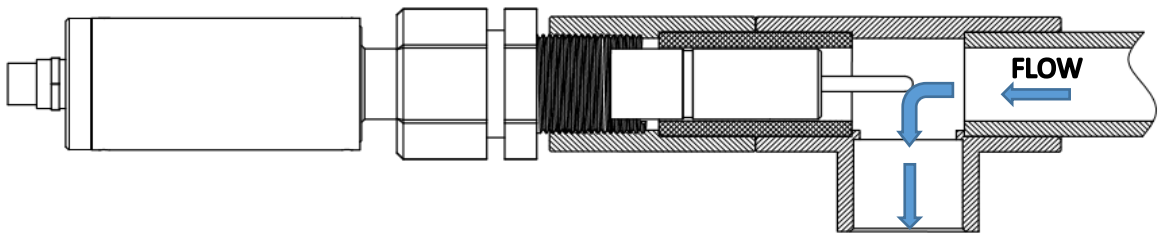

Figure 1. ECORR installation to the sample flow

The sensor probe shall be inserted into a pipe via a 1-inch threaded tee. The corrosion rate measured by the ECORR sensor may be affected by the position of the two-test metal electrodes in relation to the water flow. The electrodes should be fully immersed in the water sample and away from any turbulence. The sensor body has three O-ring grooves to allow the 1-inch male NPT thread to be locked at three positions on the probe with a compression nut. Thus, the depth of the probe insertion in the pipe can be adjusted. For the best performance, the two-test metal electrodes should be installed to be parallel to the flow and maintain a symmetry between the electrodes with respect to the flow environment as much as possible.

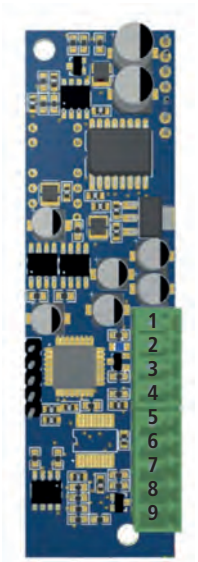

1) n/a
2) n/a
3) n/a
4) n/a
5) Red Wire +24 V
6) Brown Wire -24 V
7) n/a
8) Yellow Wire RS-485 (B)
9) Blue Wire RS-485 (A)

Note: Don't use the Bluetooth adapter included in the package or any other additional component to properly use the probe when connected to the Centurio controller.

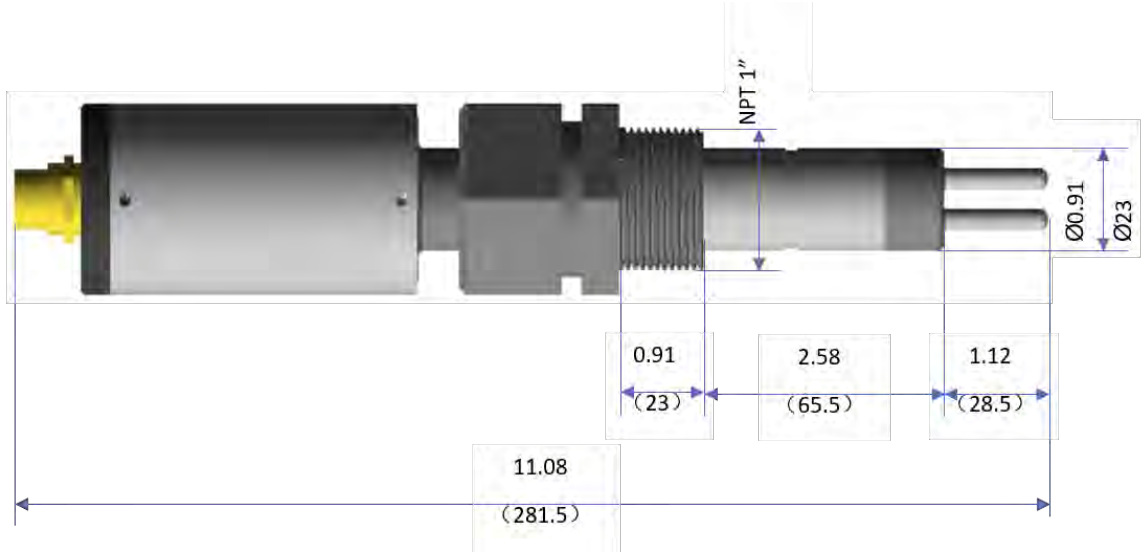

Figure 3. ECORR dimensions in inch [mm]

5. Test Metal Electrodes

provides 5-cm^2 (0.736 square inch) metal electrodes, commonly used in the LPR corrosion measurement applications. The common names, UNS codes, and alloy factors are listed the table below.

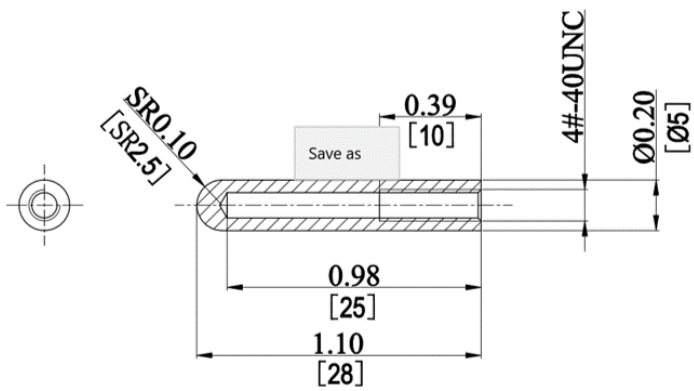

Figure 4. Test Metal Electrode Dimensions (inch [mm])

Common Designation	UNS	Alloy Factor
Aluminum AA1100	A91100	0.94
Aluminum Alloy AA6061	A96061	0.94
Copper CDA110	C11000	2.00
Arsenical Admiralty Brass CDA443	C44300	1.67
Mild Steel C1010	G10100	1.00
Stainless Steel 304	S30400	0.89

Metal electrodes with a different length and a slightly different diameter could be used with the ECORR sensor as long as the electrodes fit into the 4-40 external thread. The alloy factor for a given metal alloy is proportional to the surface area of the electrode. If an electrode with a surface area different than 5 cm^2 (0.736 square inch) is used, please calculate the alloy factor according to the surface area and the alloy factor listed above.

6.2. Default Settings for Steel Corrosion

The default 4-20 mA current outputs are scaled as:

4 mA = 0 MPY or 0 localized corrosion index
20 mA = 10 MPY (White)
20 mA = 120 (localized)

The sensor is configured to measure the corrosion of mild steel by default. For measuring the corrosion rate of steel, the user just needs to scale 20 mA = 10 MPY in the controller.

6.3. Convert 4-20 mA Output to MPY using the Calibration Check Caps

A 2.0 MPY steel and 0.1 MPY copper calibration check caps are included in the ECORR package.
Follow the steps below to configure the controller's 4-20 mA range:

- Install two new test electrodes
- Plug the sensor to the calibration check cap and wait for at least for 15 minutes for the sensor to carry out three measurements (figure 9)
- Change the controller's analog input setup to have the corrosion rate value on the controller match with the value marked on the calibration cap

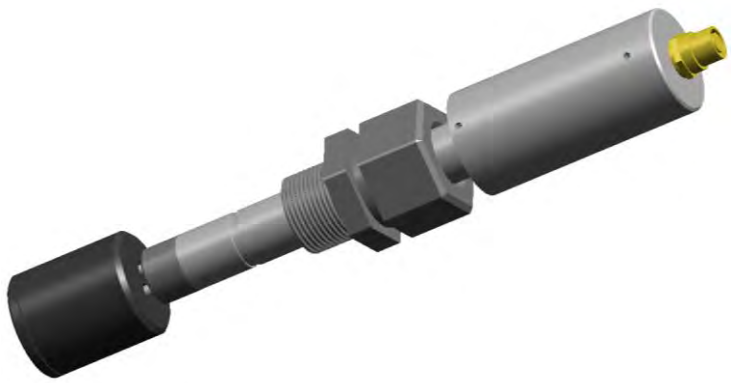

Figure 9. Plug the sensor into the calibration cap

7. Sensor Cleaning and Maintenance

For best performance, severely corroded sensor metal electrodes should be replaced. Any deposit on the sensor body and near the base area of the metal electrode should be cleared. Minor corrosion product deposit on the electrode surface is acceptable. Non-corrosion product deposit such as calcium carbonate scale should be removed. The sensor should not be left in stagnant water for a long period unless measuring corrosion rate of the metal in such condition is the purpose for evaluation.

PRECAUTIONS RELATING TO DIRECTIVES, REGULATIONS AND STANDARDS

§ CE/EU and UKCA marking

We guarantee that this product meets the essential requirements of the applicable Directives and Regulations based on the following specifications. Please carefully consider the following specifications for use of the product in European Union member countries and the United Kingdom.

• CE/EU harmonized directives and standards

Directives

DIRECTIVE 2014/30/EU
DIRECTIVE 2011/65/EU
DELEGATED DIRECTIVE (EU) 2015/863

Harmonized standards

EN ISO 12100
EN IEC 61326-1
EN IEC 63000

• UKCA harmonized regulations and standards

Regulations

2008 2016 No. 1091
2012 No. 3032

Harmonized standards

BS EN ISO 12100
BS EN IEC 61326-1
BS EN IEC 63000

Disposal of end-of-life equipment by users

This symbol warns you not to dispose of the product with normal waste. Respect human health and the environment by giving the discarded equipment to a designated collection center for the recycling of electronic and electrical equipment. For more information visit the online site.

When dismantling a pump please separate material types and send them according to local recycling disposal requirements. We appreciate your efforts in supporting your local Recycle Environmental Program. Working together we'll form an active union to assure the world's invaluable resources are conserved.