R990525

# ECL6 - ECL6E - ECL12 - ECL12E

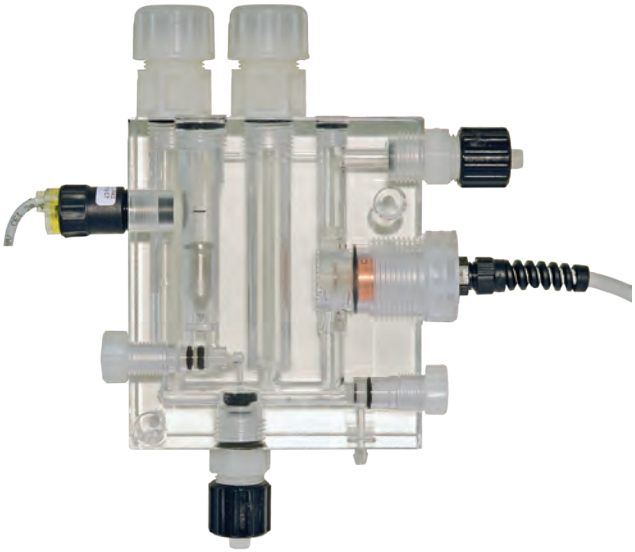

EN

OPERATING MANUAL

OPEN AMPEROMETRIC CELLS

## INDEX

**GENERAL SAFETY GUIDELINES .....3**
**PURPOSE OF USE AND SAFETY .....4**
**ENVIRONMENTAL SAFETY.....5**
**SPARE PARTS.....5**
**INTRODUCTION.....7**
Open amperometric cells ..... 7
MODELS ..... 8
Packaging ..... 8
ECL6 ..... 9
ECL6/E ..... 9
ECL12 ..... 10
ECL12/E ..... 10
Operating principle ..... 11
Precautions ..... 11
Installation ..... 12
pH/ORP/temperature probes installation ..... 13
Commissioning..... 13
Electrode replacing ..... 14
Electrode cleaning ..... 14
Calibration ..... 15
Decommissioning ..... 15
**MAINTENANCE .....16**
Maintenance schedule..... 16
Maintenance inspection ..... 16
Calibration procedure ..... 16
**TROUBLESHOOTING .....17**
Repair service..... 17
ECL6 ..... 18
ECL6/E ..... 19
ECL12 ..... 20
ECL12/E ..... 21

This operating instructions contains safety information that if ignored can endanger life or result in serious injury.
The original instruction is in English.

Read these instructions **carefully** before use and keep them for future reference.

Information and specifications on this manual could be uncorrect or could have printing errors. Specifications are subject to change without notice.

Version: R1-02-17

---

**D.M. 7 Febbraio 2012 n.25 – D.M.6 Aprile 2004 n.174 – Regolamento UE 10/2011**
**Apparecchiature finalizzate al trattamento dell'acqua destinata al consumo umano/**
**Equipment intended to come into contact with food/**
**Materiales y objetos plasticos destinados a entrar en contacto con alimentos.**

## GENERAL SAFETY GUIDELINES

Operating, installing, or maintaining the unit in any way that is not covered in this manual could cause death, serious personal injury, or damage to the equipment.

**ICON**

This manual use the following safety message icon:

**Danger!**
Indicates a hazardous situation which, if not avoided, will result in death or serious injury.

**Warning!**
Indicates a hazardous situation which, if not avoided, could result in death or serious injury.

**Important** - A practice not related to personal injury or additional information.

**Cross reference** - An instance which refers to related information elsewhere in the same document

## PURPOSE OF USE AND SAFETY

**EQUIPMENT INTENDED FOR THE MEASUREMENT OF CHLORINE IN WATER.**

Do not use in explosive area (EX).
Do not use with flammable chemicals.
Do not use with radioactive chemicals.

Use the equipment in accordance with the data and specifications printed on the label.

Do not modify or use in a manner inconsistent with the provisions of the operating manual.

⚠ **When using this product with aggressive chemicals observe the regulations concerning the transport and storage of aggressive fluids.**

⚠ **When installing always observe national regulations.**

⚠ **Manufacturer is not liable for any unauthorized use or misuse of this product that may cause injury, damage to persons or materials.**

⚠ **Probes must be serviced and repaired by qualified and authorized personnel only.**

⚠ **Before any operation:**
- **always read chemical Material Safety Data Sheet (MSDS);**
- **always wear protective clothing;**
- **empty and rinse the liquid end before work on a the product which has been used with hazardous or unknown chemicals.**

⚠ **Avoid grinding / shock / falls / friction.**

## Environmental safety

### Work area

Always keep the area clean to avoid and/or discover emissions.

### Recycling guidelines

**EWC code: 16 02 16**

Always recycle according to these guidelines:
1. If the unit or parts are accepted by an authorized recycling company, then follow local recycling laws and regulations.
2. If the unit or parts are not accepted by an authorized recycling company, then return them to the nearest representative.

### Waste and emissions regulations

Observe these safety regulations regarding waste and emissions:
- Dispose appropriately of all waste.
- Handle and dispose of the dosed chemical in compliance with applicable environmental regulations.
- Clean up all spills in accordance with safety and environmental procedures.
- Report all environmental emissions to the appropriate authorities.

## Spare parts

For spare parts orders or any other communication, refer to the pump's label.
Code (CODE) and serial number (P / N) uniquely identify the probe.

**Transportation and storage**

**An unsuitable transportation or storage can cause damages.**

**Use original box to pack the amperometric cell.**

**Observe storage conditions also for transportation.**

**Although packed, always protect the unit against humidity and the action of chemicals.**

**Before returning the probe to the manufacturer repair service, refer to Decommissioning.**

DO NOT DISCARD PACKAGING. USE IT TO RETURN THE PROBE.

**Storage**

**To store the probe refer to Decommissioning.**

**1. Clean the electrode, refer to Cleaning procedure.**

**2. Store the probe in the original box, protected against sun, chemicals and humidity.**

Transportation and storage temperature ..... +10°C - +50°C (+32°F - +122°F)
Humidity ..... 95% relative humidity (not condensed)

## INTRODUCTION

**Open amperometric cells**

ECL Series is designed for measuring free chlorine (both organic and inorganic).
Open amperometric cells comprise an Off-line probe holders, a sensing electrode and a flow electrode. Probe holders can contain up to three probes (temperature, pH and ORP).

The flow of water within this cell must remain constant and within 40 l/h. A pressure stabilizer is available for areas subject to sudden pressure changes.

It is recommended to instal a filter before the probe holder.

Suitable for non-clean water thanks to the presence of cleaning balls.

Fig. 1. Description

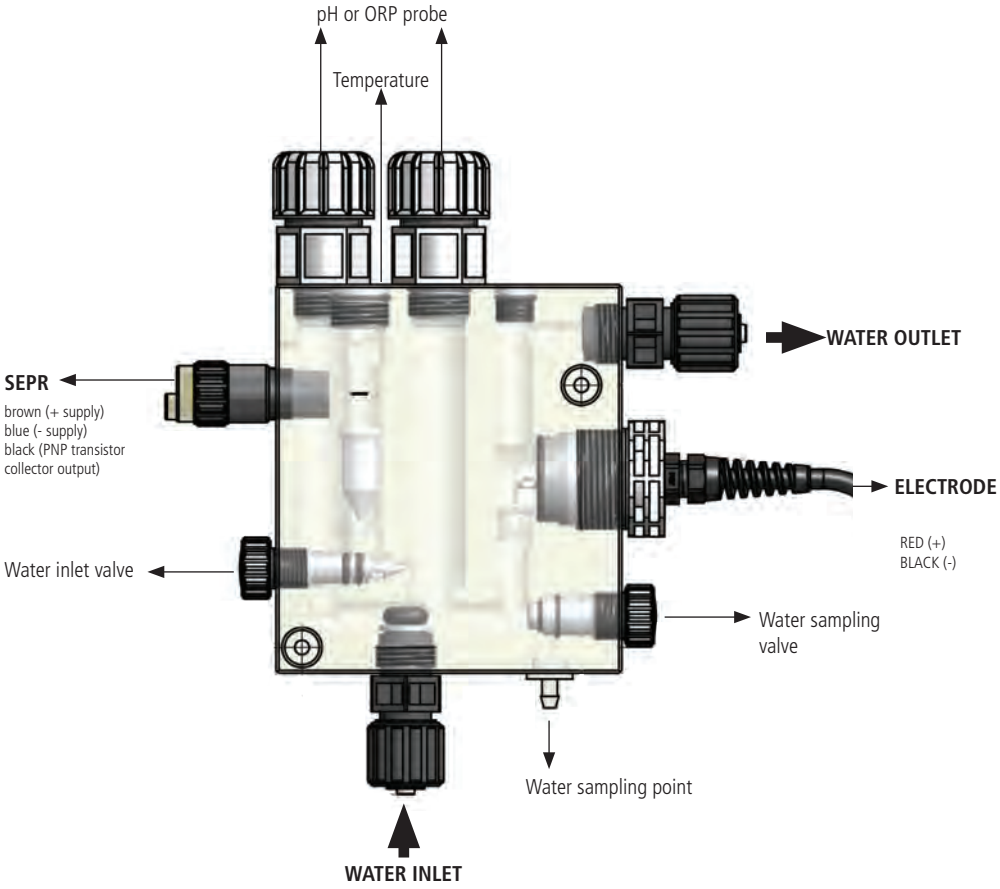

**MODELS**

- ECL6 for free chlorine (organic and inorganic) - pH and ORP probe-holder
- ECL6/E for free chlorine (organic and inorganic)
- ECL12 for free chlorine (organic and inorganic) for salt water - pH and ORP probe-holder
- ECL12/E for free chlorine (organic and inorganic) for salt water

**Packaging**

Packaging includes:

- AMPEROMETRIC CELL
- COD. 11070081: KIT SCREW + WASHER +SCREW COVERS
- COD. 11067291: STANDARD KIT (1/2" PP+FP NIPPLE; 1/2" PVC GREY BALL VALVE M/M; FLAT GASKET 1/2" F 1/4" M EPDM)
- COD. 02502121: 1/2" 6X8 HOSE HOLDING KIT FOR BLACK PP VALVE
- 4 MT 6X8 PE HOSE

**ECL6**
**ECL6/E**

| | ECL6 | ECL6/E |
|---|---|---|
| **Parameter** | FREE CHLORINE (ORGANIC AND INORGANIC) / BROMINE | |
| **Measuring range** | 0-10 mg/l (0-10 ppm) resolution: ± 0.05 | |
| **Connection** | 2 wires (+red; -black) | |
| **Measuring system** | amperometric - 2 electrodes (platinum/copper; on request gold/copper) | |
| **Ph working range** | 6-8 pH | |
| **Run-in-time** | First polarization: 2 h about<br>Next polarizations: 50 min. about | |
| **Response time** | $T_{90}$: 2 min. about | |
| **Zero point adjustment** | See Operating manual: "Calibration" | |
| **Alcalinity** | 100 ppm | |
| **Working temperature** | 5-40° C (41-104°F) | |
| **Pressure** | 0.4 - 5 bar (5.8 - 72.5 PSI) | |
| **Cable (standard)** | 2 m (6.6 ft); 1 m if assembled on panel | |
| **Working flow** | 40 l/h | |
| **Suitable as probe holder for** | pH, ORP and temperature | temperature |
| **Fittings for connection to the sample pipeline** | 6x8 | |
| **Material** | Electrode: platinum/copper<br>Measurement cell: metacrylate (PMMA) | |
| **Mounting** | On flat vertical surface (panel, support, etc.). | |
| **Storage** | Frost and dry protected (5-40° C) | |
| **Maintenance** | Regular control of the signal<br>SHORTEN THE MAINTENANCE INTERVALS APPROPRIATELY DEPENDING ON WATER QUALITY. | |

**ECL12**
**ECL12/E**

| | ECL12 | ECL12/E |
|---|---|---|
| **Parameter** | FREE CHLORINE (ORGANIC AND INORGANIC) FOR SALT WATER | |
| **Measuring range** | 0-10 mg/l (0-10 ppm) resolution: ± 0.05 | |
| **Connection** | 2 wires (+red; -black) | |
| **Measuring system** | amperometric - 2 electrodes (platinum/silver) | |
| **Ph working range** | 6-8 pH | |
| **Run-in-time** | First polarization: 2 h about<br>Next polarizations: 50 min. about | |
| **Response time** | $T_{90}$: 2 min. about | |
| **Zero point adjustment** | See Operating manual: "Calibration" | |
| **Slope calibration** | See Operating manual: "Calibration"- DPD1 method | |
| **Alcalinity** | 100 ppm | |
| **Working temperature** | 5-40° C (41-104°F) | |
| **Pressure** | 0.4 - 5 bar (5.8 - 72.5 PSI) | |
| **Cable (standard)** | 2 m (6.6 ft); 1 m if assembled on panel | |
| **Working flow** | 40 l/h | |
| **Suitable as probe holder for** | pH, ORP and temperature | temperature |
| **Fittings for connection to the sample pipeline** | 6x8 | |
| **Material** | Electrode: platinum/silver<br>Measurement cell: metacrylate (PMMA) | |
| **Mounting** | On flat vertical surface (panel, support, etc.). | |
| **Storage** | Frost and dry protected (5-40° C) | |
| **Maintenance** | Regular control of the signal<br>SHORTEN THE MAINTENANCE INTERVALS APPROPRIATELY DEPENDING ON WATER QUALITY. | |

**Operating principle**

ECL amperometric cells have an amperometric measuring system.
Measurement method is an electrochemical technique: the two electrodes (platinum and copper, or platinum and silver) produces a current directly proportional to the concentration of chlorine.

**Precautions**

**Before any operation (preparation, cleaning and replacements) and before handly the amperometric cell you MUST FOLLOW these PRECAUTIONS.**

**⚠ DANGER**

**AUTHORIZED AND QUALIFIED PERSONNEL**
**Installation and maintenance tasks should be carried out by AUTHORIZED AND QUALIFIED PERSONNEL only in accordance with local regulations.**

**⚠ DANGER**

**WEAR UNPOWDERED NITRILE GLOVES.**
**Avoid contact of the electrolyte with the skin.**
**In case of contact with skin, rinse immediately with plenty of water.**

**⚠ DANGER**

**WEAR EYE PROTECTION**
**Avoid contact of the electrolyte with the eyes.**
**In case of contact with eyes, rinse immediately with plenty of water and seek medical advice.**

**Installation**

1. Secure amperometric cell on a stable wall by screwing the two fixing screws on the body of the amperometric cell (⎘ Dimensional).
2. Connect water inlet and outlet to the pipe.
3. We recommend the installation of a filter before the amperometric cell.
4. Install pH, ORP and temperature probes (if any) in their seats.
5. Connect SEPR and electrode to the instrument terminal board (refer to the manual of the instrument).

Fig. 2. Amperometric cell installation

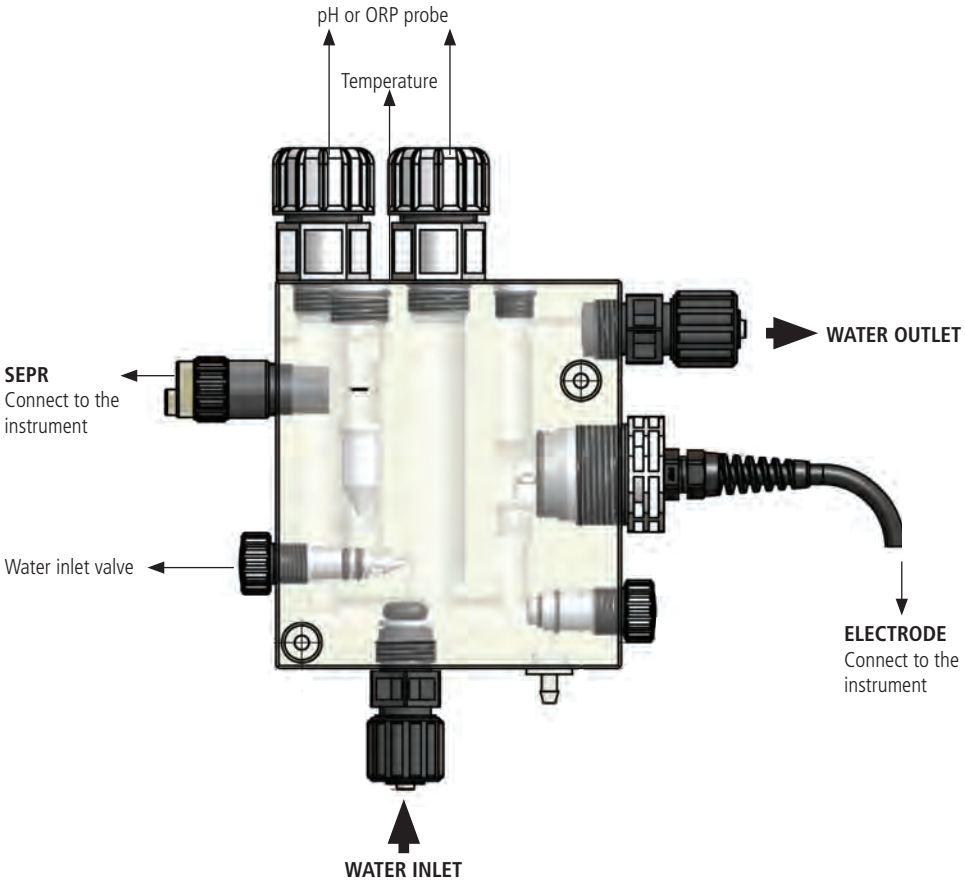

**pH/ORP/ temperature probes installation**

Referring to the drawing below, follow the assembly sequence.

Fig. 3. pH, ORP, temperaure porbes installation.

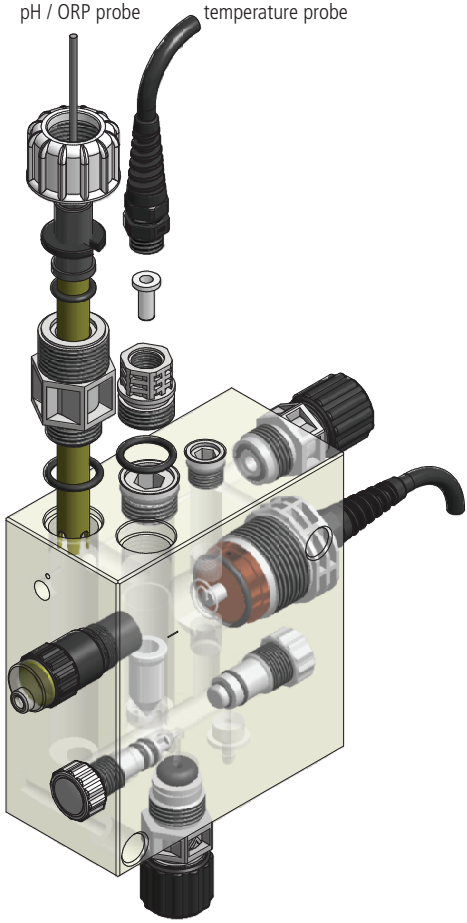


**Commissioning**

1. Open water flow into the cell turning water inlet valve.
2. Turn until the float reaches the black mark on the cell.
3. SEPR LED lights to indicate the proper flow into the cell.

Fig. 4. Correct float position

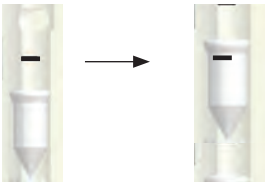

## Electrode replacing

**DANGER**
**AUTHORIZED AND QUALIFIED PERSONNEL**

Installation and maintenance tasks should be carried out by AUTHORIZED AND QUALIFIED PERSONNEL only in accordance with local regulations.

**DANGER**
**POWER SUPPLY DISCONNECTION**

Always disconnect power to the equipment before you perform any installation or maintenance tasks. Failure to disconnect power will result in serious physical injury.

1. Follow precautions described in paragraph "Precautions".
2. Close water inlet valve.
3. Disconnect electrode's wirings on the instruments terminal (refer to the manual of the instrument).
4. Unscrew the screw at the top right that secures the amperometric cell to the wall / panel.
5. Pivoting on bottom left screw, gently rotate the cell to the left approximately 30 degrees so as not to fall outside the cleaning balls.
6. Unscrew the electrode and replace it with a new one or clean as specified in paragraph "Electrode cleaning".
7. Screw electrode in its seat.
8. Tighten right screw onto the amperometric cell in order to secure it on the wall / panel.
9. Reconnect wires on the instrument terminal (refer to the manual of the instrument).
10. Proceed to the calibration of amperometric cell.

## Electrode cleaning

To clean electrode, follow from step 1 to 6 of paragraph "Electrode replacing", then

1. Unscrew electrode.
2. Clean the copper with a cotton ball soaked in acid solution, gently rub with a fine-grain abrasive paper and rinse with water.
3. Screw electrode in its seat.
4. Reconnect wires on the instrument terminal (refer to the manual of the instrument).
5. Proceed to the calibration of amperometric cell.

**DANGER**
**Do not USE alcohol to clean the amperometric cell.**

**Calibration**

Perform calibration of amperometric cell on a monthly basis or more, if necessary.
Amperometric cell must be calibrated with the instrument to which it is connected.
Calibration is carried out on two points: 0 and a second point near the work value.
For calibration procedure refer to the manual of the instrument.

**Decommissioning**

Decommission the cell before any maintenance operation, shipping and long downtimes.

**DANGER**
**AUTHORIZED AND QUALIFIED PERSONNEL**
**Installation and maintenance tasks should be carried out by AUTHORIZED AND QUALIFIED PERSONNEL only in accordance with local regulations.**

**DANGER**
**POWER SUPPLY DISCONNECTION**
**Always disconnect power to the equipment before you perform any installation or maintenance tasks. Failure to disconnect power will result in serious physical injury.**

1. Disconnect power supply.
2. Stop water feeding by turning water inlet valve.
3. Keep a basin under sampling point and open water sampling valve to drain the liquid inside.
4. Disconnect electrode's wirings on the instruments terminal (refer to the manual of the instrument) and uscrew electrode (keep cleaning balls in a basin).
5. Disconnect hydraulic connections.
6. Unscrew amperometric cell from panel / wall.
7. Unscrew SEPR:
8. Wash the PMMA body from chlorine residues.
9. Air dry.

**Maintenance schedule**

**DANGER**
**MAINTENANCE SCHEDULE**
In order to ensure the requirements of potable drinking water treated and the maintenance of the improvements as declared by the manufacturer, this equipment must be checked at least once a week.

**DANGER**
**OPERATOR PROTECTION**
Use safety equipment according to the company regulations.
Use this safety equipment within the work area during installation, service and when handling chemicals:

- protective mask
- unpowdered nitrile gloves
- safety goggles
- further security device, if necessary.

**DANGER**
**POWER SUPPLY DISCONNECTION**
Always disconnect power to the equipment before you perform any installation or maintenance tasks. Failure to disconnect power will result in serious physical injury.

**DANGER**
**AUTHORIZED AND QUALIFIED PERSONNEL**
Installation and maintenance tasks should be carried out by AUTHORIZED AND QUALIFIED PERSONNEL only in accordance with local regulations.

**IMPORTANT**
Use original spare parts.

**Maintenance inspection**

| INTERVAL | MAINTENANCE INSPECTIONS | REFERENCE |
|---|---|---|
| Weekly | Check probe reading (DPD1 or colorimetric method) | Calibration procedure |
| Monthly | Check electrical wiring and cable | - |
| Periodically | Check electrode | Cleaning procedure |

Shorten the inspection intervals appropriately if necessary.

## TROUBLESHOOTING

| PROBLEM | CAUSES | SOLUTIONS |
|---|---|---|
| Sensor cannot be calibrated and measured value greater than DPD measurement | Run-in period too short | Observe the run-in period |
| | Troublesome substances in the water | Check water for troublesome substances and contact supplier |
| | Short circuit in the measuring line | Identify short circuit and eliminate the cause. Contact supplier |
| | Electrode is dirty | Clean or replace electrode |
| Sensor measured value is unstable | Dirty / damaged electrode | Clean or replace electrode |
| | Unstable pressure | Check installation |
| Nessun segnale di lettura | Insufficient flow into the cell | Check correct position of the float. If necessary, open water flow into the cell |
| | Desoldering wires in the electrode cable | Contact supplier |
| | Black and red wires reversed | Check for proper connection of the wires on the instrument terminal |

**Repair service**

**Before return the amperometric cell to the manufacturer Repair service, follow ⎘ Decommisioning procedure.**
**If there is the possibility that residual corrosive liquid into pump head could cause damages, declare it on REPAIR FORM.**

Complete the PRODUCT SERVICE REPAIR FORM and send it with the amperometric cell.
Repair service is not accepted if PRODUCT SERVICE REPAIR FORM is missing.

## ECL6

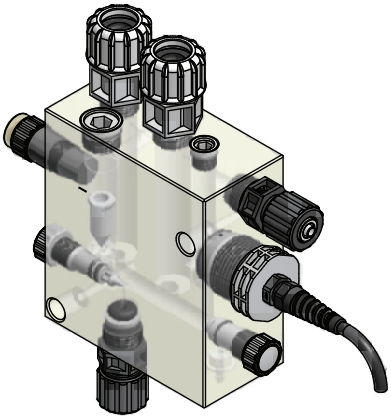

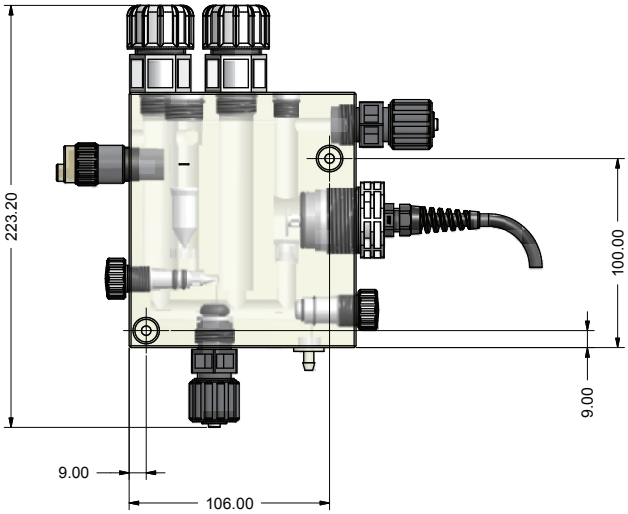


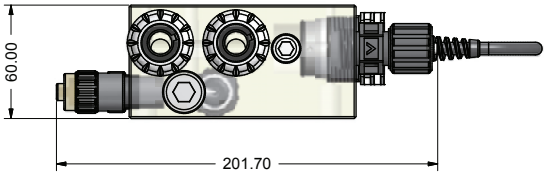

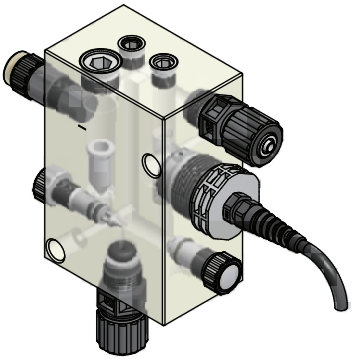

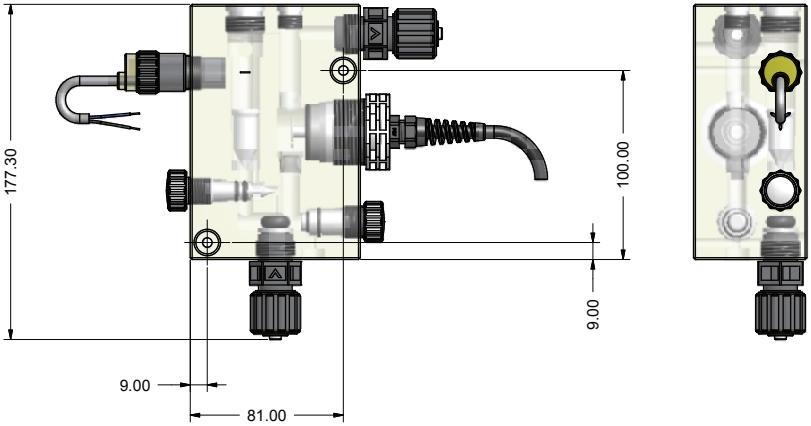
177.30
100.00
9.00
9.00
81.00

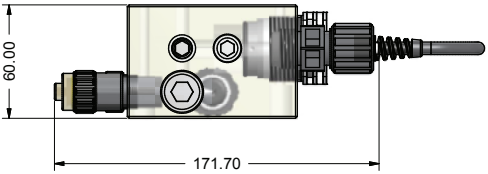
60.00
171.70

# DIMENSIONS

## ECL12

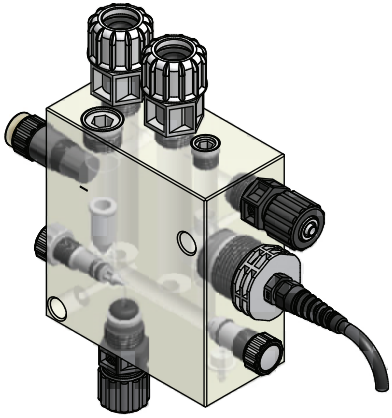

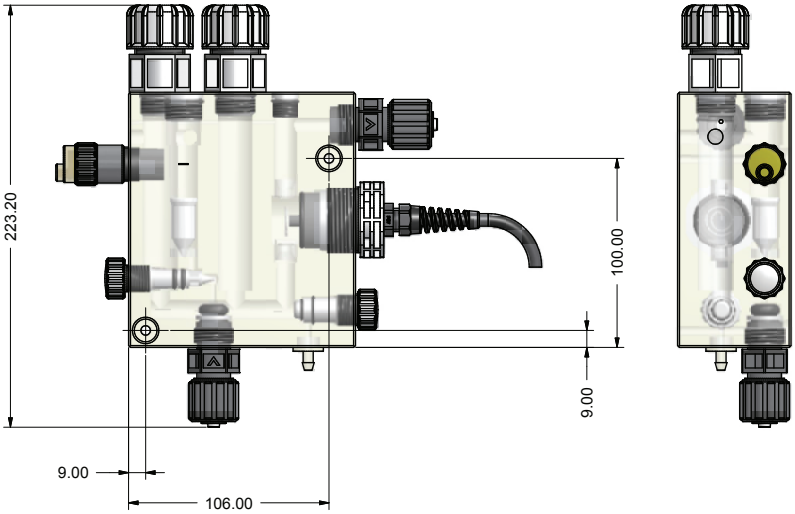


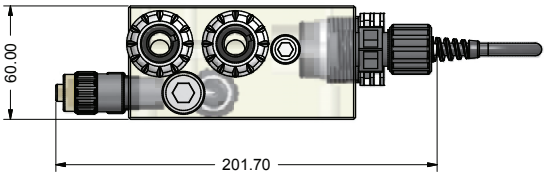

**ECL12/E**

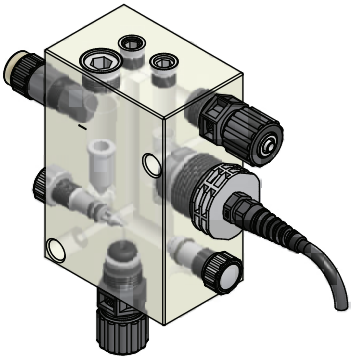

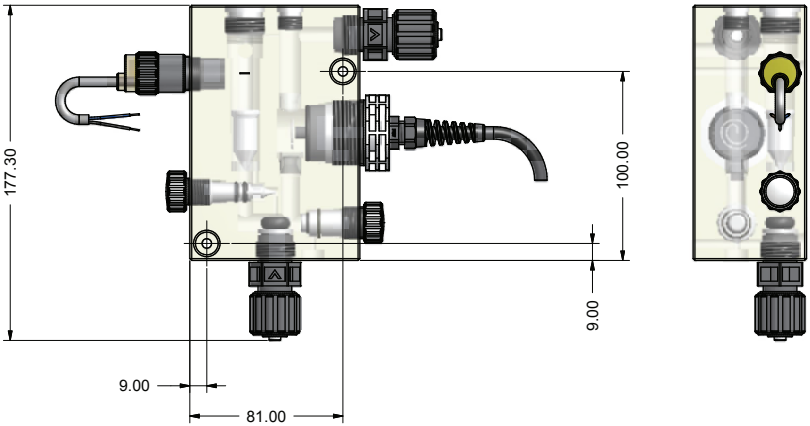


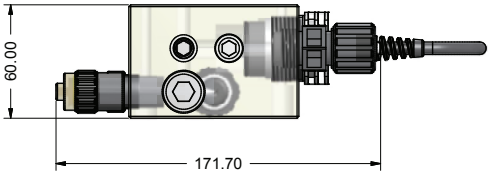

# PRODUCT SERVICE REPAIR FORM

ENCLOSE THE PRESENT FORM TO THE DELIVERY NOTE

**DATE** .....

**SENDER**

Company name.....

Address .....

Phone no. .....

Contact person.....

**PRODUCT TYPE (see product label)**

DEVICE CODE .....

S/N (serial number).....

**OPERATING CONDITIONS**

Location/installation description .....

.....

Chemical .....

Start-up (date) ..... Running time (approx. hours).....

REMOVE ALL THE LIQUID AND DRY IT BEFORE PACKAGING IN ITS ORIGINAL BOX.

**DESCRIPTION OF PROBLEM**

☐ MECHANICAL

Wear parts.....

Brekage/other damages .....

Corrosion.....

Other.....

☐ ELECTRICAL

Connections, connector, cables .....

Other.....

☐ NOT OR INADEQUATE FUNCTION/OTHER

.....

.....

.....

**I declare that the product is free of any hazardous chemical.**

Signature of the compiler

Company stamp

## PRECAUTIONS RELATING TO DIRECTIVES, REGULATIONS AND STANDARDS

### § CE/EU and UKCA marking

We guarantee that this product meets the essential requirements of the applicable Directives and Regulations based on the following specifications. Please carefully consider the following specifications for use of the product in European Union member countries and the United Kingdom.

**• CE/EU harmonized directives and standards**

**Directives**

DIRECTIVE 2014/30/EU
DIRECTIVE 2011/65/EU
DELEGATED DIRECTIVE (EU) 2015/863

**Harmonized standards**

EN ISO 12100
EN IEC 61326-1
EN IEC 63000

**• UKCA harmonized regulations and standards**

**Regulations**

2008 2016 No. 1091
2012 No. 3032

**Harmonized standards**

BS EN ISO 12100
BS EN IEC 61326-1
BS EN IEC 63000

**Disposal of end-of-life equipment by users**

This symbol warns you not to dispose of the product with normal waste. Respect human health and the environment by giving the discarded equipment to a designated collection center for the recycling of electronic and electrical equipment. For more information visit the online site.

When dismantling a pump please separate material types and send them according to local recycling disposal requirements. We appreciate your efforts in supporting your local Recycle Environmental Program. Working together we'll form an active union to assure the world's invaluable resources are conserved.