CONDUCTIVITY PROBES
HIGH LINEARITY

Data Sheet

HIGH LINEARITY CONDUCTIVITY PROBES

High linearity conductivity electrodes with EPOXY body.
They perform an accurate and reliable operativity into chemical environment.

These electrodes are made for an easy maintenance, accurate reading and fast response.

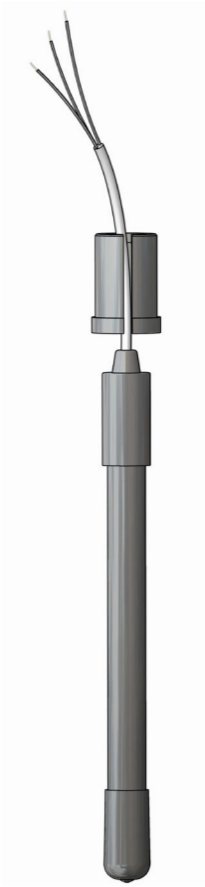

Max 7 bar@70°C

K: 0.1 - 1 - 10

MODELS

	ECDHL/01	ECDHL/1	ECDHL/10	ECDHLC/01	ECDHLC/1	ECDHLC/10	ECDHLCPT/01	ECDHLCPT/1	ECDHLCPT/10
Measuring Range	0-200 µS	0,2-20 mS	20-200 mS	0-200 µS	0,2-20 mS	20-200 mS	0-200 µS	0,2-20 mS	20-200 mS
K Factor	0,1	1	10	0,1	1	10	0,1	1	10
Max pressure Max temp.	7 bar @ 70°C	7 bar @ 70°C	7 bar @ 70°C	7 bar @ 70°C	7 bar @ 70°C	7 bar @ 70°C	7 bar @ 70°C	7 bar @ 70°C	7 bar @ 70°C
Body	EPOXY	EPOXY	EPOXY	EPOXY	EPOXY	EPOXY	EPOXY	EPOXY	EPOXY
Electrodes	Platinum	Platinum	Platinum	Platinum	Platinum	Platinum	Platinum	Platinum	Platinum
Cable length	5 m	5 m	5 m	5 m	5 m	5 m	5 m	5 m	5 m
Temperature compensator	-	-	-	NTC 10K	NTC 10K	NTC 10K	PT 100	PT 100	PT 100

Via Donatori di Sangue, 1 - 02100 Rieti (Italy)
+39 074622841 | emecpumps.com

Specifications subject to change without notice | R2025

emec SIMPLE AS WATER

IQNET CERTIFIED MANAGEMENT SYSTEM
qualityaustria SYSTEM CERTIFIED
ISO 9001:2015 No.07728/0
ISO 14001:2015 No.00997/0
ISO 45001:2018 No.01121/0

CONDUCTIVITY PROBES
HIGH LINEARITY

Data Sheet

ECDHL/xx

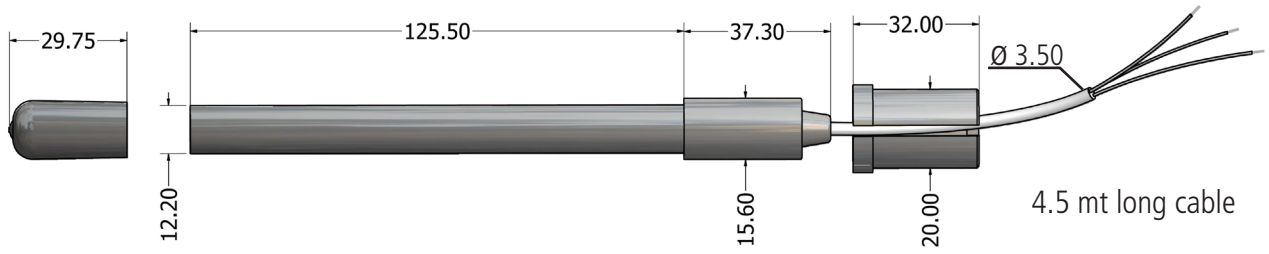

ECDHLC/xx

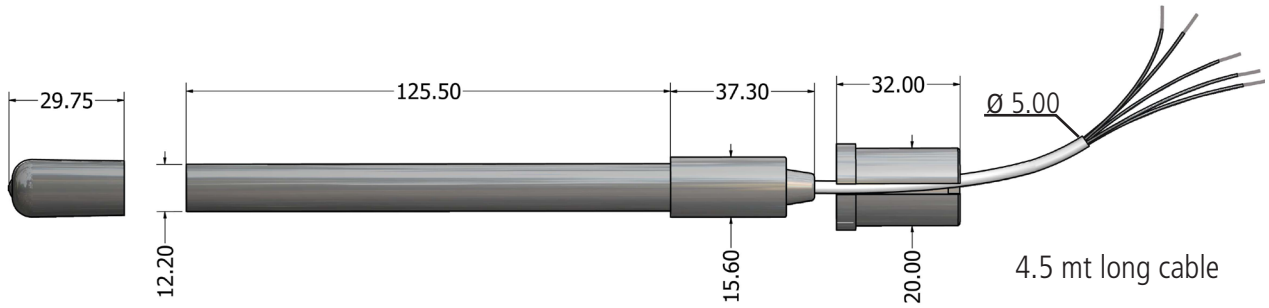

COMPENSATION	CABLE		WIRES SIZE
N/A	RED	ELECTRODES	2 x 0.50
	BLACK		
	GROUND	GROUND	

NTC 10K	RED	ELECTRODES	2 x 0.50
	BLACK		
	GROUND	GROUND	2 x 0.50
	WHITE-GREEN	NTC 10K	

PT 100	RED	ELECTRODES	2 x 0.50
	BLACK		
	GROUND	GROUND	2 x 0.50
	WHITE-GREEN	PT 100	

Via Donatori di Sangue, 1 - 02100 Rieti (Italy)
+39 074622841 | emecpumps.com

Specifications subject to change without notice | R2025

emec
SIMPLE AS WATER

IQNET CERTIFIED MANAGEMENT SYSTEM
qualityaustria SYSTEM CERTIFIED
ISO 9001:2015 No.07728/0
ISO 14001:2015 No.00997/0
ISO 45001:2018 No.01121/0