ECL

Open amperometric cells

Data Sheet

ECL Series is designed for measuring free chlorine (both organic and inorganic).
Open amperometric cells comprise an Off-line probe holders, a sensing electrode and a flow electrode.
Probe holders can contain up to three probes (temperature, pH and ORP).

The flow of water within this cell must remain constant and within 40 l/h. A pressure stabilizer is available for areas subject to sudden pressure changes.

It is recommended to instal a filter before the probe holder.

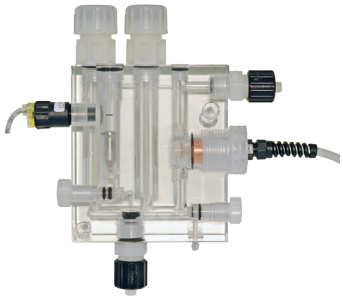

ECL6
ECL7
ECL12

- Chlorine probes (hypochlorous acid)
- Stable and reliable measurement even with low chlorine concentrations values
- Acrylic body
- Continuous sampling measurement
- Proximity flow sensor controlled (ECL6; ECL6/E; ECL7; ECL12; ECL12/E)

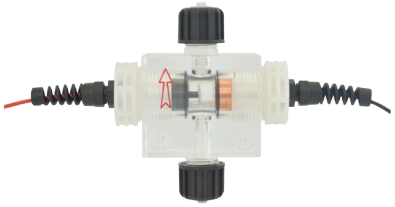

ECL20
ECL21

R21221

CHLORINE in water can be present in different combination:

FREE CHLORINE ACTIVE:	HOCl (hypochlorous acid)
COMBINED CHLORINE:	Monochloramine, dichloramine, trichloramine (DPD4-DPD1 analysis system)
FREE ORGANIC CHLORINE:	Free chlorine with isocyanide acid (DPD1 analysis system)
FREE INORGANIC CHLORINE:	Free chlorine. (DPD1 analysis system)
TOTAL CHLORINE:	Free chlorine and combined chlorine. (DPD4 analysis system)

MODELS

- ECL20 FOR FREE CHLORINE (ORGANIC AND INORGANIC) FOR FRESH WATER
- ECL21 FOR FREE CHLORINE (ORGANIC AND INORGANIC) FOR SALT WATER
- ECL6 FOR FREE CHLORINE (ORGANIC AND INORGANIC)
- ECL7 FOR FREE CHLORINE (ORGANIC AND INORGANIC)
- ECL6/E FOR FREE CHLORINE (ORGANIC AND INORGANIC)
- ECL12 FOR FREE CHLORINE (ORGANIC AND INORGANIC) FOR SALT WATER
- ECL12/E FOR FREE CHLORINE (ORGANIC AND INORGANIC) FOR SALT WATER

Via Donatori di Sangue, 1 - 02100 Rieti (Italy)
+39 074622841 | emecpumps.com

Specifications subject to change without notice | R2025

emec SIMPLE AS WATER

IQNET CERTIFIED MANAGEMENT SYSTEM
qualityaustria SYSTEM CERTIFIED
ISO 9001:2015 No.07728/0
ISO 14001:2015 No.00997/0
ISO 45001:2018 No.01121/0

ECL

Open amperometric cells

Data Sheet

ECL6
ECL6/E

	ECL6	ECL6/E
Parameter	FREE CHLORINE (ORGANIC AND INORGANIC) / BROMINE	
Measuring range	0-10 mg/l (0-10 ppm) resolution: ± 0.05	
Connection	2 wires (+red; -black)	
Measuring system	amperometric - 2 electrodes (platinum/copper; on request gold/copper)	
Ph working range	6-8 pH	
Run-in-time	First polarization: 2 h about Next polarizations: 50 min. about	
Response time	T_{90}: 2 min. about	
Zero point adjustment	See Operating manual: "Probe alignment"	
Slope calibration	See Operating manual: "Probe alignment"- DPD1 method	
Alcalinity	min 100 ppm	
Working temperature	5-40° C (41-104°F)	
Pressure	0.4 - 5 bar (5.8 - 72.5 PSI)	
Cable (standard)	2 m (6.6 ft); 1 m if assembled on panel	
Working flow	40 l/h	
Suitable as probe holder for	pH, ORP and temperature	temperature
Fittings for connection to the sample pipeline	6x8	
Material	Electrode: platinum/copper Measurement cell: metacrylate (PMMA)	
Mounting	On flat vertical surface (panel, support, etc.).	
Storage	Frost and dry protected (5-40° C)	
Maintenance	Regular control of the signal SHORTEN THE MAINTENANCE INTERVALS APPROPRIATELY DEPENDING ON WATER QUALITY.	

Via Donatori di Sangue, 1 - 02100 Rieti (Italy)
+39 074622841 | emecpumps.com

Specifications subject to change without notice | R2025

emec SIMPLE AS WATER

IQNET CERTIFIED MANAGEMENT SYSTEM
qualityaustria SYSTEM CERTIFIED
ISO 9001:2015 No.07728/0
ISO 14001:2015 No.00997/0
ISO 45001:2018 No.01121/0

ECL

Data Sheet

Open amperometric cells

ECL7

	ECL7
Parameter	FREE CHLORINE (ORGANIC AND INORGANIC)
Measuring range	0-10 mg/l (0-10 ppm) resolution: ± 0.05
Connection	2 wires (+red; -black)
Measuring system	amperometric - 2 electrodes (platinum/copper; on request gold/copper)
Ph working range	6-8 pH
Run-in-time	First polarization: 2 h about Next polarizations: 50 min. about
Response time	T_{90}: 2 min. about
Zero point adjustment	See Operating manual: "Probe alignment"
Slope calibration	See Operating manual: "Probe alignment"- DPD1 method
Alcalinity	min 100 ppm
Working temperature	5-40° C (41-104°F)
Pressure	0.4 - 5 bar (5.8 - 72.5 PSI)
Cable (standard)	2 m (6.6 ft); 1 m if assembled on panel
Working flow	40 l/h
Suitable as probe holder for	pH, Redox (PG13,5) e temperature
Fittings for connection to the sample pipeline	6x8
Material	Electrode: platinum/copper Measurement cell: metacrylate (PMMA)
Mounting	On flat vertical surface (panel, support, etc.).
Storage	Frost and dry protected (5-40° C)
Maintenance	Regular control of the signal SHORTEN THE MAINTENANCE INTERVALS APPROPRIATELY DEPENDING ON WATER QUALITY.

Via Donatori di Sangue, 1 - 02100 Rieti (Italy)
+39 074622841 | emecpumps.com

Specifications subject to change without notice | R2025

emec SIMPLE AS WATER

IQNET CERTIFIED MANAGEMENT SYSTEM
qualityaustria SYSTEM CERTIFIED
ISO 9001:2015 No.07728/0
ISO 14001:2015 No.00997/0
ISO 45001:2018 No.01121/0

ECL

Data Sheet

Open amperometric cells

ECL12
ECL12/E

	ECL12	ECL12/E
Parameter	FREE CHLORINE (ORGANIC AND INORGANIC) FOR SALT WATER	
Measuring range	0-10 mg/l (0-10 ppm) resolution: ± 0.05	
Connection	2 wires (+red; -black)	
Measuring system	amperometric - 2 electrodes (platinum/silver)	
Ph working range	6-8 pH	
Run-in-time	First polarization: 2 h about Next polarizations: 50 min. about	
Response time	T_{90}: 2 min. about	
Zero point adjustment	See Operating manual: "Probe alignment"	
Slope calibration	See Operating manual: "Probe alignment"- DPD1 method	
Alcalinity	min 100 ppm	
Working temperature	5-40° C (41-104°F)	
Pressure	0.4 - 5 bar (5.8 - 72.5 PSI)	
Cable (standard)	2 m (6.6 ft); 1 m if assembled on panel	
Working flow	40 l/h	
Suitable as probe holder for	pH, ORP and temperature	temperature
Fittings for connection to the sample pipeline	6x8	
Material	Electrode: platinum/silver Measurement cell: metacrylate (PMMA)	
Mounting	On flat vertical surface (panel, support, etc.).	
Storage	Frost and dry protected (5-40° C)	
Maintenance	Regular control of the signal SHORTEN THE MAINTENANCE INTERVALS APPROPRIATELY DEPENDING ON WATER QUALITY.	

ECL

Open amperometric cells

Data Sheet

ECL20

	ECL20
Parameter	FREE CHLORINE (ORGANIC AND INORGANIC) FOR FRESH WATER
Measuring range	0-10 mg/l (0-10 ppm) resolution: ± 0.05
Connection	2 wires (+red; -black)
Measuring system	amperometric - 2 electrodes
Ph working range	6-8 pH
Run-in-time	First polarization: 2 h about Next polarizations: 50 min. about
Response time	T_{90}: 2 min. about
Zero point adjustment	See Operating manual: "Probe alignment"
Slope calibration	See Operating manual: "Probe alignment"- DPD1 method
Alcalinity	min 100 ppm
Working temperature	5-40° C (41-104°F)
Pressure	0.4 - 5 bar (5.8 - 72.5 PSI)
Cable (standard)	2 m (6.6 ft); 1 m if assembled on panel
Working flow	40 l/h
Fittings for connection to the sample pipeline	6x8
Material	Electrode: platinum/copper Measurement cell: metacrylate (PMMA)
Mounting	On flat vertical surface (panel, support, etc.).
Storage	Frost and dry protected (5-40° C)
Maintenance	Regular control of the signal SHORTEN THE MAINTENANCE INTERVALS APPROPRIATELY DEPENDING ON WATER QUALITY.

Via Donatori di Sangue, 1 - 02100 Rieti (Italy)
+39 074622841 | emecpumps.com

Specifications subject to change without notice | R2025

emec SIMPLE AS WATER

IQNET CERTIFIED MANAGEMENT SYSTEM
qualityaustria SYSTEM CERTIFIED
ISO 9001:2015 No.07728/0
ISO 14001:2015 No.00997/0
ISO 45001:2018 No.01121/0

ECL

Open amperometric cells

Data Sheet

ECL21

	ECL21
Parameter	FREE CHLORINE (ORGANIC AND INORGANIC) FOR SALT WATER
Measuring range	0-10 mg/l (0-10 ppm) resolution: ± 0.05
Connection	2 wires (+red; -black)
Measuring system	amperometric - 2 electrodes
Ph working range	6-8 pH
Run-in-time	First polarization: 2 h about Next polarizations: 50 min. about
Response time	T_{90}: 2 min. about
Zero point adjustment	See Operating manual: "Probe alignment"
Slope calibration	See Operating manual: "Probe alignment"- DPD1 method
Alcalinity	min 100 ppm
Working temperature	5-40° C (41-104°F)
Pressure	0.4 - 5 bar (5.8 - 72.5 PSI)
Cable (standard)	2 m (6.6 ft); 1 m if assembled on panel
Working flow	40 l/h
Fittings for connection to the sample pipeline	6x8
Material	Electrode: platinum/silver Measurement cell: metacrylate (PMMA)
Mounting	On flat vertical surface (panel, support, etc.).
Storage	Frost and dry protected (5-40° C)
Maintenance	Regular control of the signal SHORTEN THE MAINTENANCE INTERVALS APPROPRIATELY DEPENDING ON WATER QUALITY.

Via Donatori di Sangue, 1 - 02100 Rieti (Italy)
+39 074622841 | emecpumps.com

Specifications subject to change without notice | R2025

emec SIMPLE AS WATER

IQNET CERTIFIED MANAGEMENT SYSTEM
qualityaustria SYSTEM CERTIFIED
ISO 9001:2015 No.07728/0
ISO 14001:2015 No.00997/0
ISO 45001:2018 No.01121/0

DIMENSIONS

ECL12

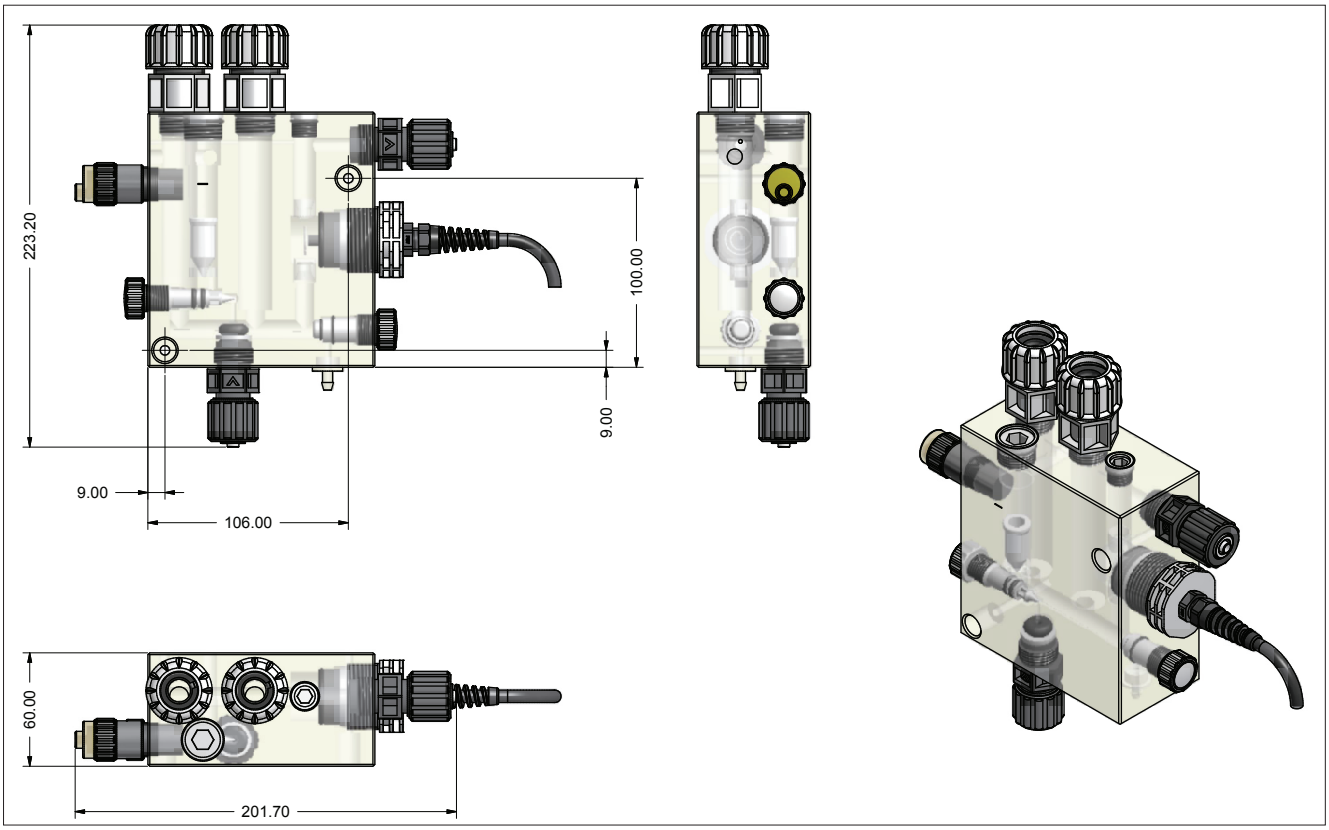

ECL12/E

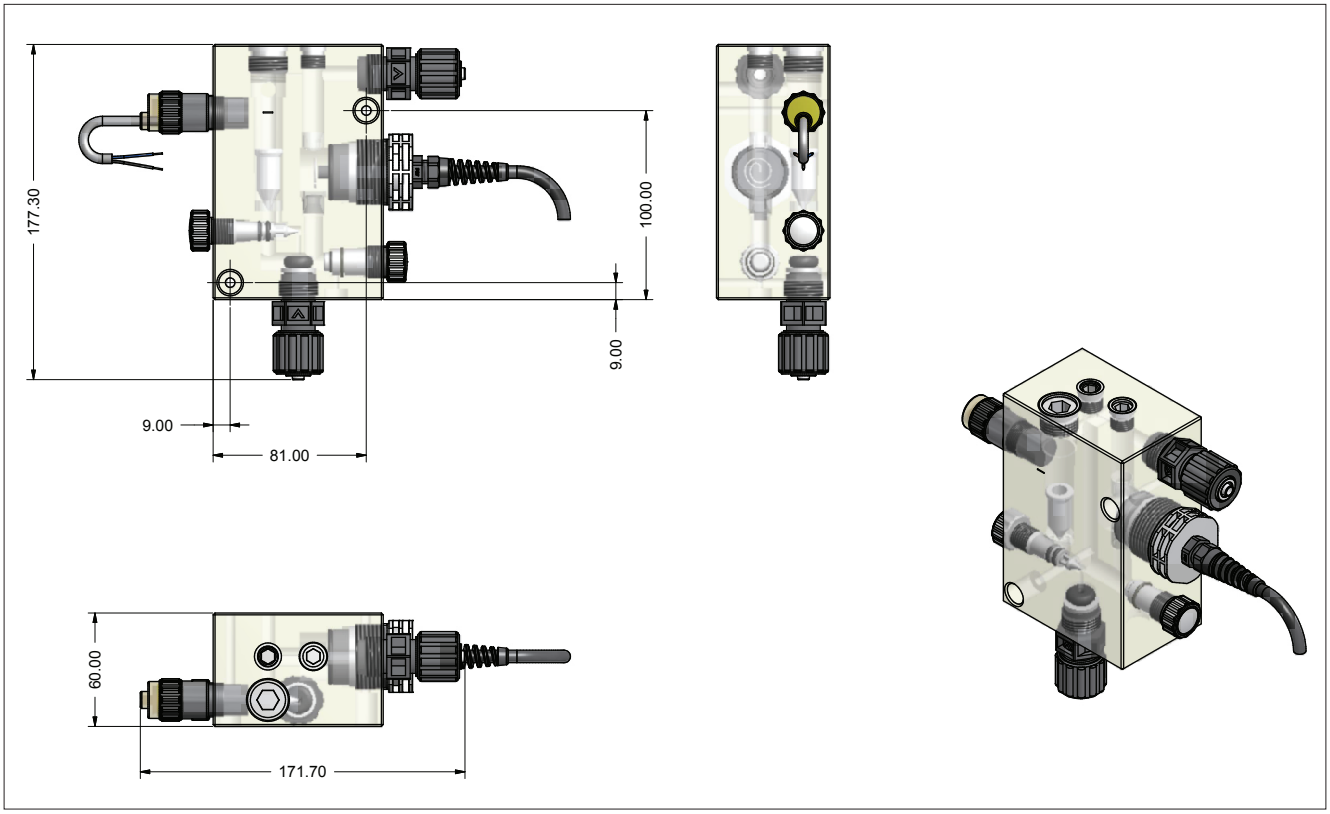

DIMENSIONS

ECL6 / ECL7

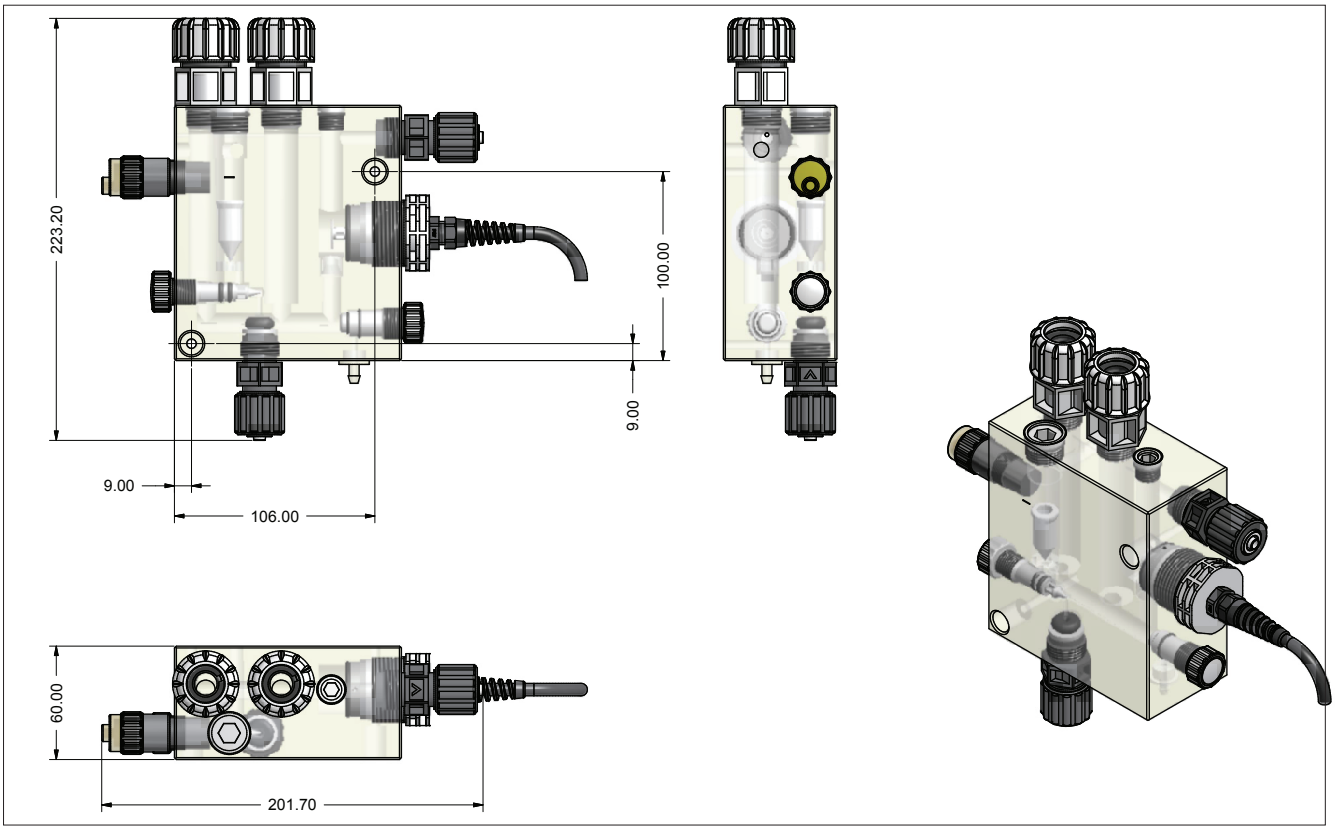

ECL6/E

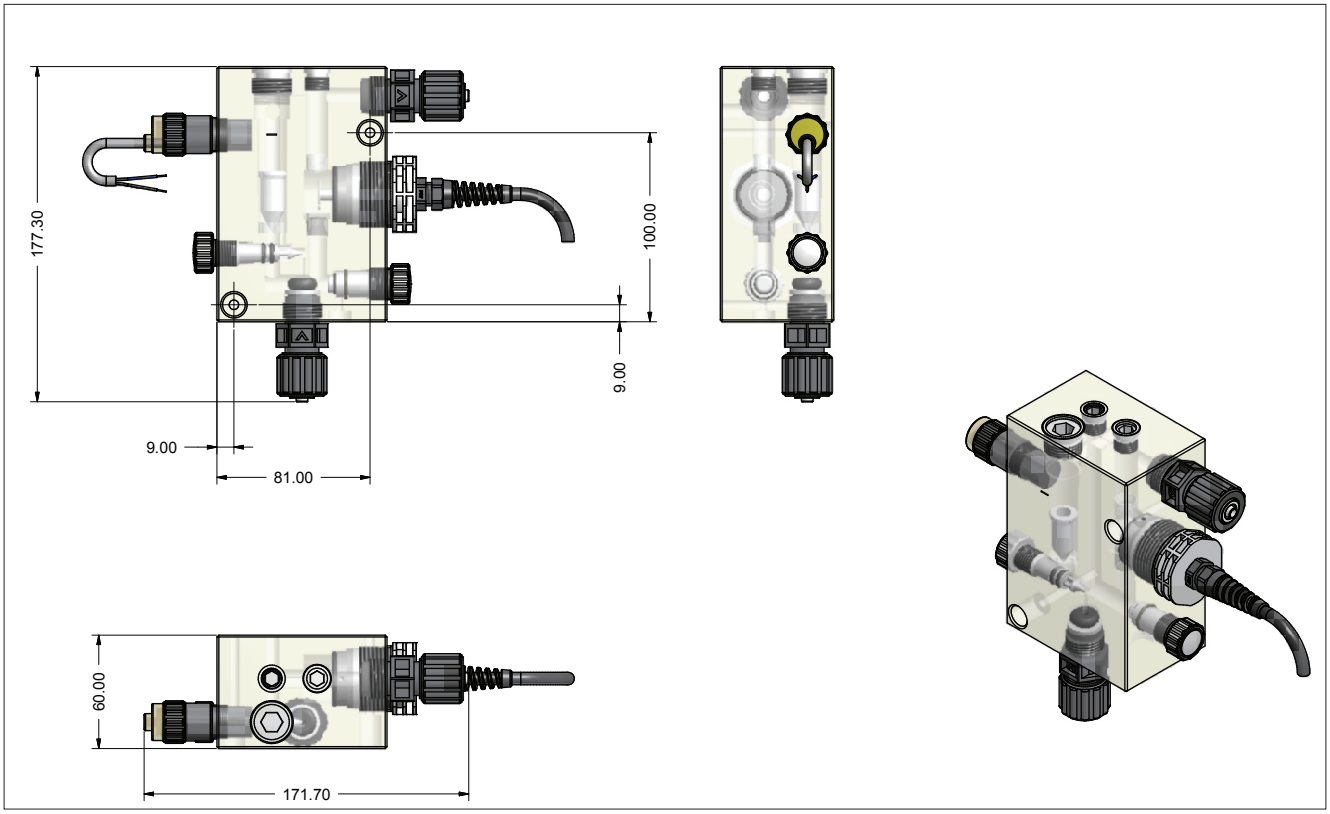

Via Donatori di Sangue, 1 - 02100 Rieti (Italy)
+39 074622841 | emecpumps.com

Specifications subject to change without notice | R2025

emec
SIMPLE AS WATER

IQNET CERTIFIED MANAGEMENT SYSTEM
qualityaustria SYSTEM CERTIFIED
ISO 9001:2015 No.07728/0
ISO 14001:2015 No.00997/0
ISO 45001:2018 No.01121/0

DIMENSIONI

ECL21

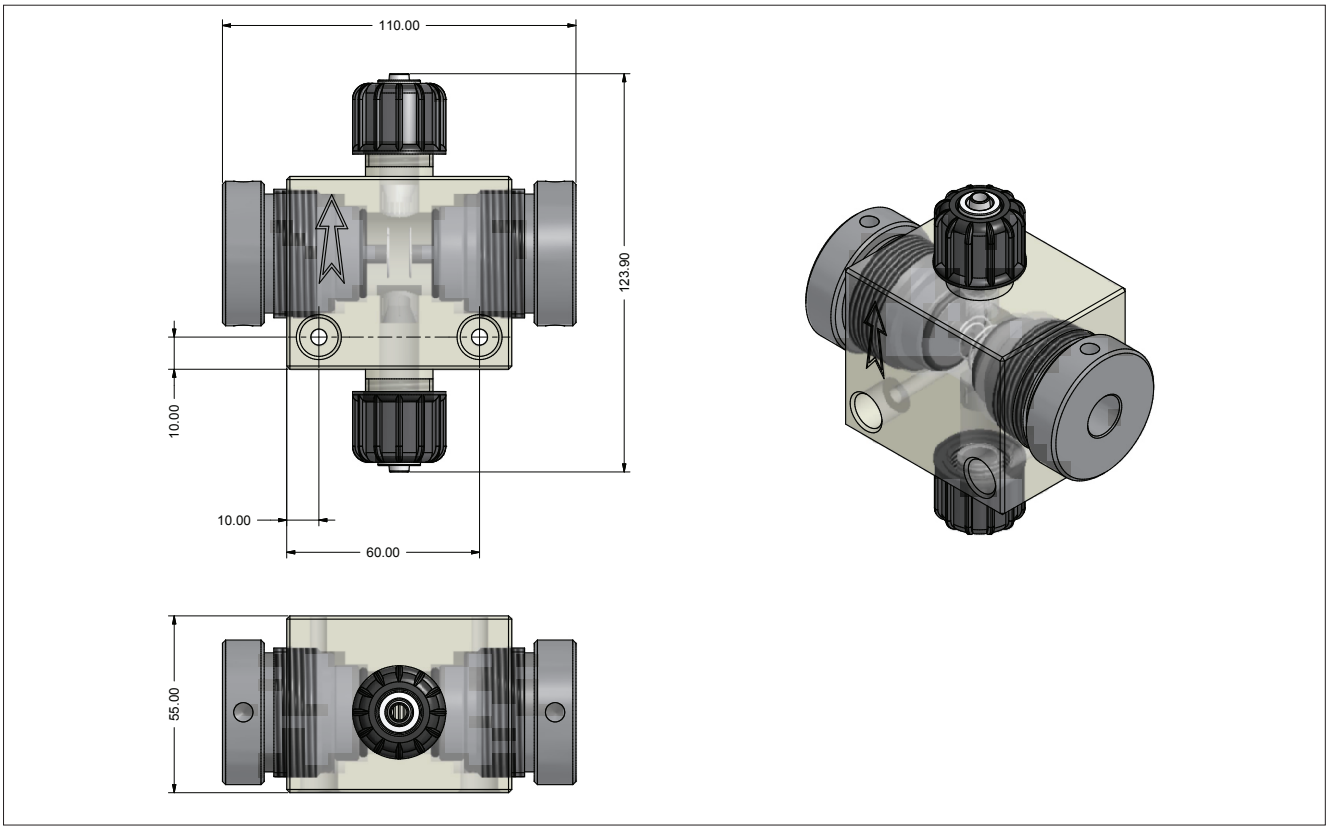
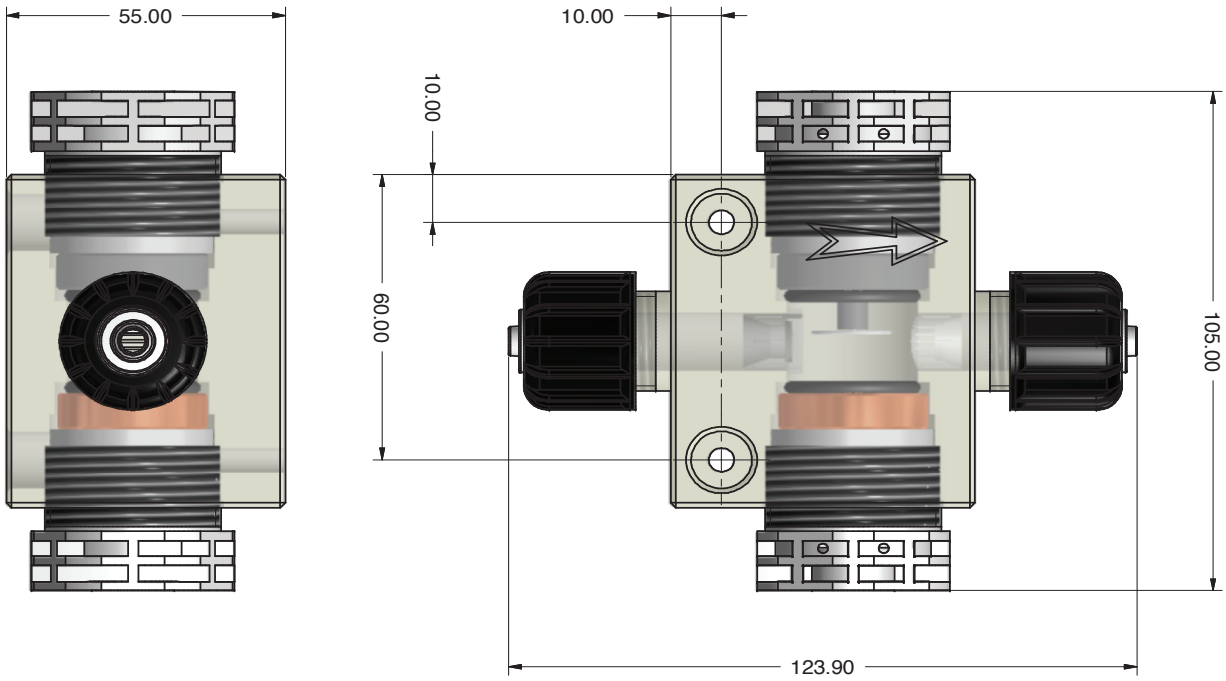
ECL20