ECDIND PT - ECDSIND PT

Data Sheet

Inductive conductivity probe

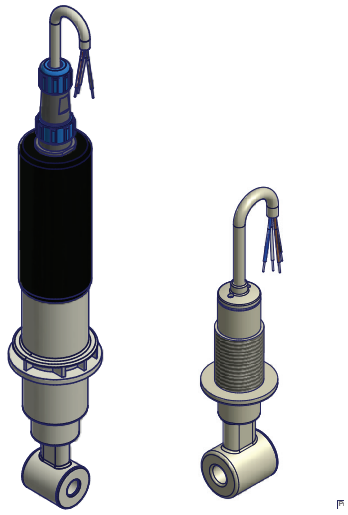

FEATURES

- Conductivity measure throughout inductive sensor.
- The inductive sensor design eliminates polarization errors and electrode coating problems that commonly affect conventional conductivity contacting-electrode models.
- PT100 (or NTC or any) temperature compensation.
- High pressure (8 bar) and temperature (up to 85°C) specifications.
- Wide conductivity range (up to 300 mS).

Inductive conductivity measurement technique: operating principle

Inductive conductivity sensor induces a low current in a closed loop of solution, then measures the magnitude of this current to determine the solution's conductivity.

The conductivity probe drives Toroid A, inducing an alternating current in the solution. This current signal flows in a closed loop through the sensor bore and surrounding solution.
Toroid B senses the magnitude of the induced current which is proportional to the conductance of the solution.

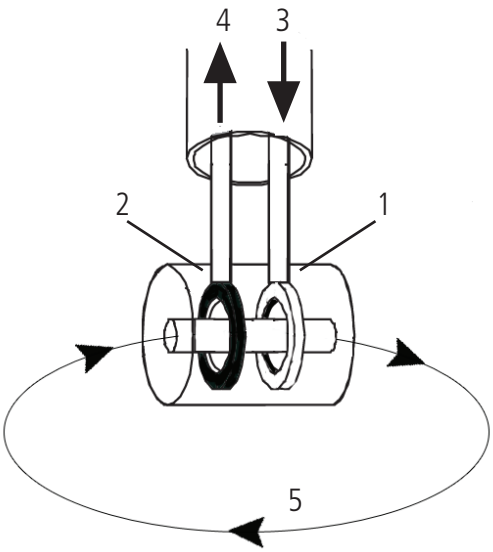

1 - Toroid A
2 - Toroid B
3 - Alternate current generator
4 - Receiver
5 - Induced current in the solution

ECDIND PT - ECDSIND PT

Inductive conductivity probe

Data Sheet

ECDIND PT

Analysys system:	inductive
Temperature:	85° C (185°F); 100°C (212°F) in spot measurements
Pressure max:	8 bar (116 PSI)
Cable/connector:	G1 and NPT ¾"
Cable length:	4 mt
Material:	PEEK
Temperature sensor:	PT100
Probe holder:	PEL-IND; PEL INDC; PEL IND SS; NPED-IND; PEC IND

Model	Range	Pressure (Bar)	Temperature (°C)	Cable (m)	Body	Compensation
ECDINDPT	0,1-3 mS; 0,3-30 mS; 0,3-300 mS	0 - 8	0 - 85	4	peek	PT100

DIMENSIONS

expressed in mm

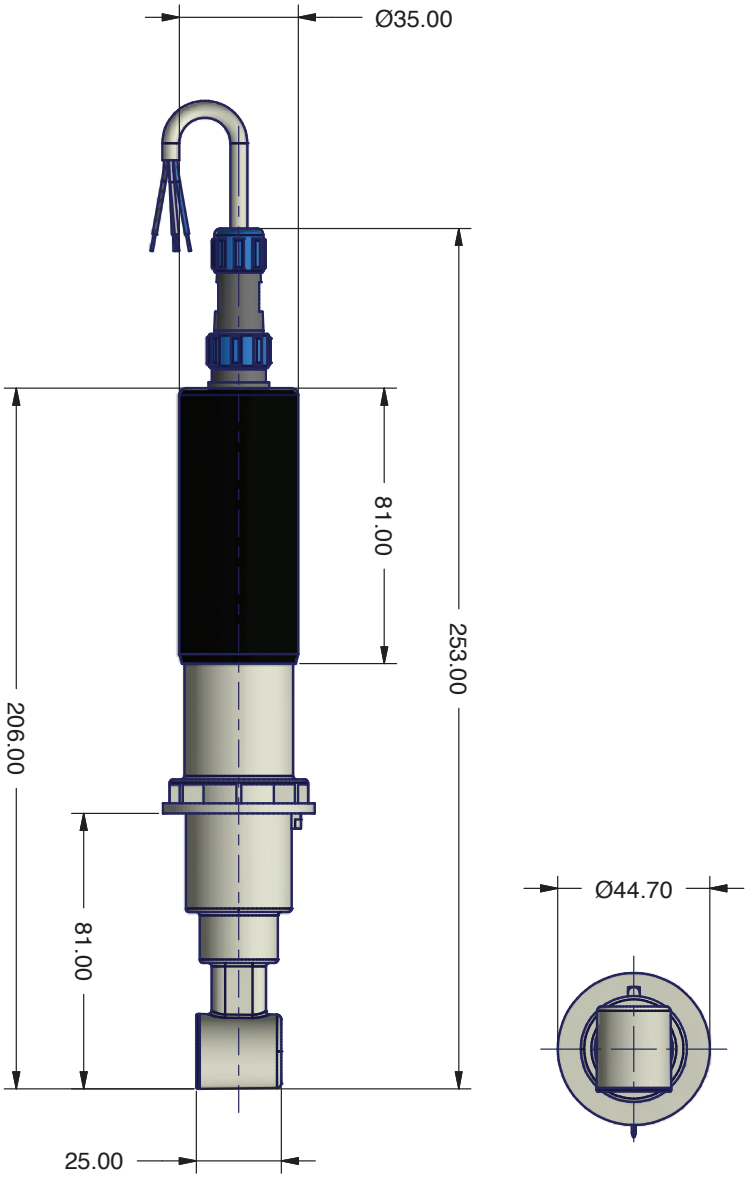

Via Donatori di Sangue, 1 - 02100 Rieti (Italy)
+39 074622841 | emecpumps.com

Specifications subject to change without notice | R2025

emec SIMPLE AS WATER

IQNET CERTIFIED MANAGEMENT SYSTEM
qualityaustria SYSTEM CERTIFIED
ISO 9001:2015 No.07728/0
ISO 14001:2015 No.00997/0
ISO 45001:2018 No.01121/0

ECDIND PT - ECDSIND PT

Data Sheet

Inductive conductivity probe

ECDSIND PT

Analysys system:	inductive
Temperature:	85° C (185°F); 100°C (212°F) in spot measurements
Pressure max:	8 bar (116 PSI)
Cable/connector:	G1 and NPT ¾"
Cable length:	4 mt
Material:	PEEK
Temperature sensor:	PT100
Probe holder:	NPED-INDS; NPED4-INDS

Model	Range	Pressure (Bar)	Temperature (°C)	Cable (m)	Body	Compensation
ECDSINDPT	0,3-10 mS	0 - 8	0 - 85	4	peek	PT100

DIMENSIONS

expressed in mm

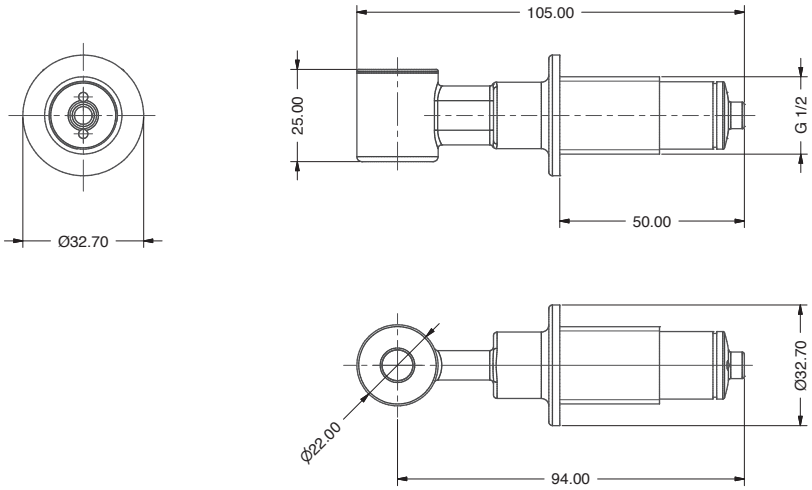

Via Donatori di Sangue, 1 - 02100 Rieti (Italy)
+39 074622841 | emecpumps.com

Specifications subject to change without notice | R2025

emec SIMPLE AS WATER

IQNET CERTIFIED MANAGEMENT SYSTEM
qualityaustria SYSTEM CERTIFIED
ISO 9001:2015 No.07728/0
ISO 14001:2015 No.00997/0
ISO 45001:2018 No.01121/0

PROPER INSTALLATION

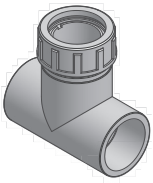

The process flow must be directed through the hole.
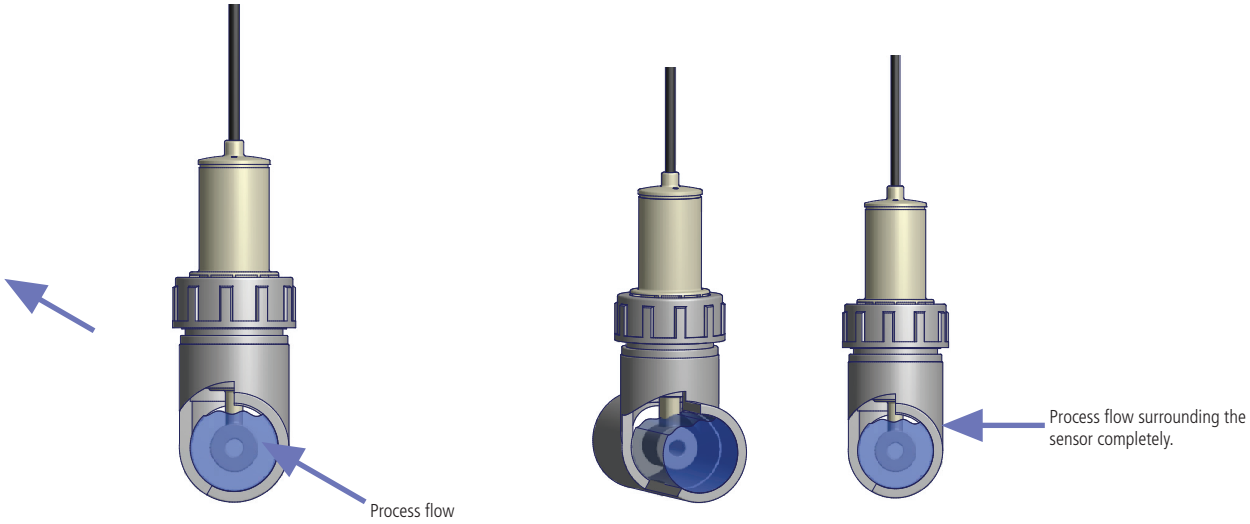
The inductive conductivity measurement technique requires a process fluid surrounding the sensor.