Technical Data Sheet

# CENTURIO POOL

## MULTIPARAMETERS CONTROL SYSTEM FOR POOL

**CENTURIO POOL** is the ideal solutions for -no compromise- multiparameters control system with the ease and safety you need and with the stylish box designed by Giugiaro Design. It has exclusive functions and controls for pools management.

**CENTURIO POOL** is equipped with a Linux operating system, a high-performance Arm® Cortex® A55 (ARMv8) 64 bit @ 1.8 GHz microprocessor, a large, touchscreen, color display, in order to give you total and simultaneous control.

Modbus | WiFi | NIMBUS by emec | RS-485 | USB PORT

- Parameters: conductivity, chlorine, pH, ORP, tracers, inductive conductivity, turbidity, potentiostatic, dissolved oxygen, level laser and mA Input.
- 10 modules available
- Real-time graphs
- Permanent data storage with system log
- USB Download
- Data import/export (backup & restore) via USB port to other CENTURIO.
- Internet connections (WIFI, 3G/4G, LAN), configuration and control by NIMBUS web app using PC, smartphone or tablet with any browser.
- MODBUS serial communication to be connected to other devices on RS485 networks and TCP/IP MODBUS, laser sensor.
- Remote software updating preserving settings and data.
- Simultaneous multiple view for probes reading
- N.O./N.C. Levels selection
- Working mode auto/manual/stop
- Permanent data storage with system log
- Stand-by input
- Different working modes (on/off, impulsive proportional, proportional pwm and fixed pwm)
- Timeout
- Programmable delay at dosing start-up (up to 99 minutes)
- PT 100 temperature compensation / built in probe
- Alarms and log report (hourly, daily, weekly, monthly).
- PEF LIGHT ALARM input

### EXCLUSIVE FUNCTIONS FOR POOL CONTROL AND MANAGEMENT

- Flocculant, for the removal of all non-filterable colloidal material
- Filtration, for dechloration, filter pressure control, timer for filtration (daily/weeky)
- Chlorine, for programming shock chlorination
- Dissociation control, for the management of the dissociation value of hypochlorous acid
- Combined Chlorine
- Timer for water games and light effects

### HARWARE

- Large 4.3" LCD Full Color Touchscreen Display
- High-performance ARM A55 microprocessor
- Large capacity storage for logging

### SOFTWARE

- NIMBUS Remote Control
- Multi-language
- Cross platform software
- Communication WIFI - 3G/4G ETHERNET - MODBUS
- High performance with LINUX operating system

### PARAMETERS

- 10 modules available
- MODBUS TCP/IP and RTU module included
- ETHERNET module included
- USB module included
- WIFI / GSM module sold as option
- 0/4-20 mA input module as option to control different parameters remotely

### BOX

- Box design by GIUGIARO DESIGN
- New "EASY-MOUNT" system
- Designed for mounting on pipes
- Opening with side zipper and captive screws

Via Donatori di Sangue, 1 - 02100 Rieti (Italy)
+39 074622841 | emecpumps.com

Specifications subject to change without notice | R2025

emec SIMPLE AS WATER

IQNET CERTIFIED MANAGEMENT SYSTEM
quality austria SYSTEM CERTIFIED
ISO 9001:2015 No.07728/0
ISO 14001:2015 No.00997/0
ISO 45001:2018 No.01121/0

Technical Data Sheet

# CENTURIO POOL

## MULTIPARAMETERS CONTROL SYSTEM FOR POOL

10 MODULES AVAILABLE

+ pH
0 - 14 pH

+ ORP
-999 +999 mV

+ CHLORINE
FREE
TOTAL
COMBINED

+ TEMPERATURE
0 - 100°C

+ mA INPUT
0/4-20 mA
analog input on board

+ TURBIDITY
40 NTU
400 NTU
4000 NTU

+ POTENTIOSTATIC
5 PPM

+ DISSOLVED OXYGEN
9.999 - 9999
PPM

+ LASER LEVEL
DIFFERENT
TANKS

+ CDIND
0.1 - 3 MS/CM
0.1 - 30 MS/CM

CONDUCTIVITY
0 - 300.0 µS
0 - 3000 µS
0 - 30 mS
0 - 300 mS

| TECHNICAL DATA | |
|---|---|
| POWER SUPPLY | 100-240 VAC; 50/60 Hz - 2 fuses protection (main power & controller) |
| AVERAGE CONSUMPTION | 25 W |
| SETPOINT OUTPUTS | 2 relays free contact, 6 powered (on/off), 8 for pulses dosing pump (NPN) |
| ANALOG OUTPUTS | 6 0/4 - 20mA |
| INPUTS | 2 for pulse sender water-mter, 1 flow sensor, 8 alarms channel, 1 standby |
| ENVIRONMENT TEMPERATURE | -10°C / 50°C (14°F / 122°F) |
| PROTECTION GRADE | IP65 - % working RH: 85% with ≤40 °C; 70% at 50 °C (non condensing) |
| POLLUTION LEVEL | 2 |
| CASE | ABS |
| TEST / CERTIFICATION | CE |
| DIMENSIONS | see draw |
| INSTALLATION | wall mounting (4 fixing points) |
| COMMUNICATION | ETHERNET / USB / MODBUS |
| OPTIONS [1] | • WIFI [2]<br>• GSM/GPRS [2] |

[1] On request
[2] For configuration features refer to the table at the end of the document.

Via Donatori di Sangue, 1 - 02100 Rieti (Italy)
+39 074622841 | emecpumps.com

Specifications subject to change without notice | R2025

emec SIMPLE AS WATER

IQNET CERTIFIED MANAGEMENT SYSTEM
qualityaustria SYSTEM CERTIFIED
ISO 9001:2015 No.07728/0
ISO 14001:2015 No.00997/0
ISO 45001:2018 No.01121/0

Technical Data Sheet

# CENTURIO POOL

## MULTIPARAMETERS CONTROL SYSTEM FOR POOL

## DIMENSIONS

mm

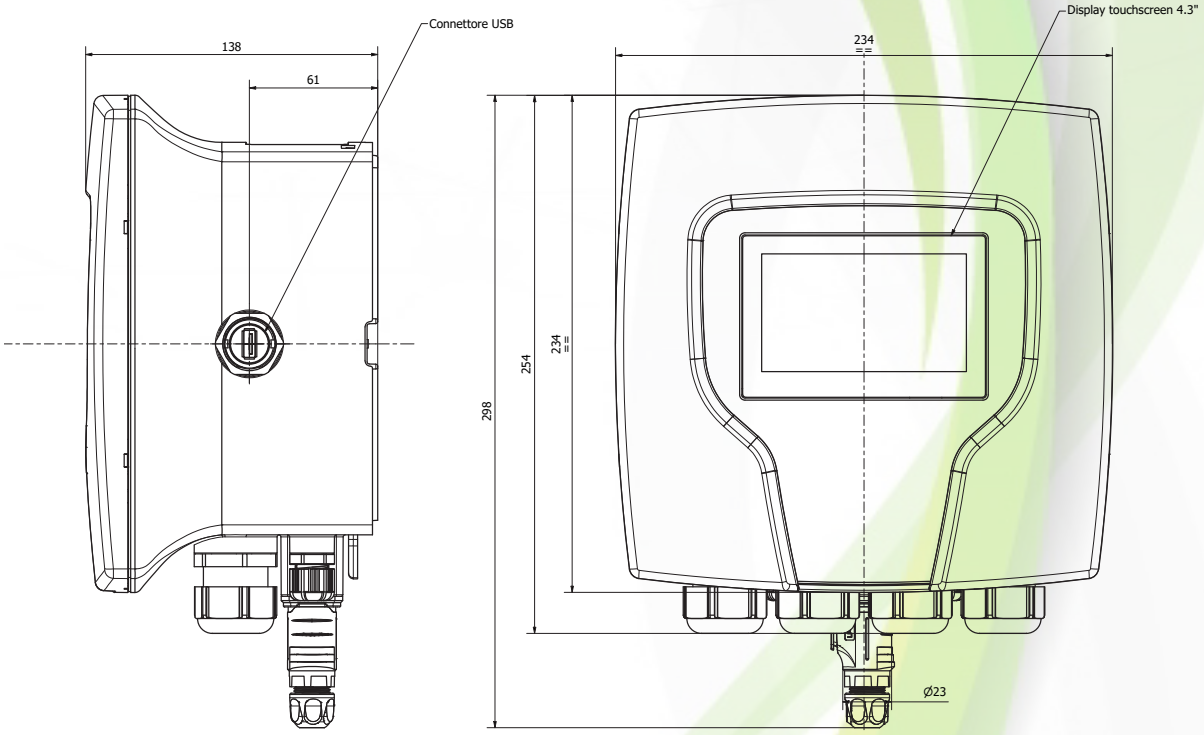


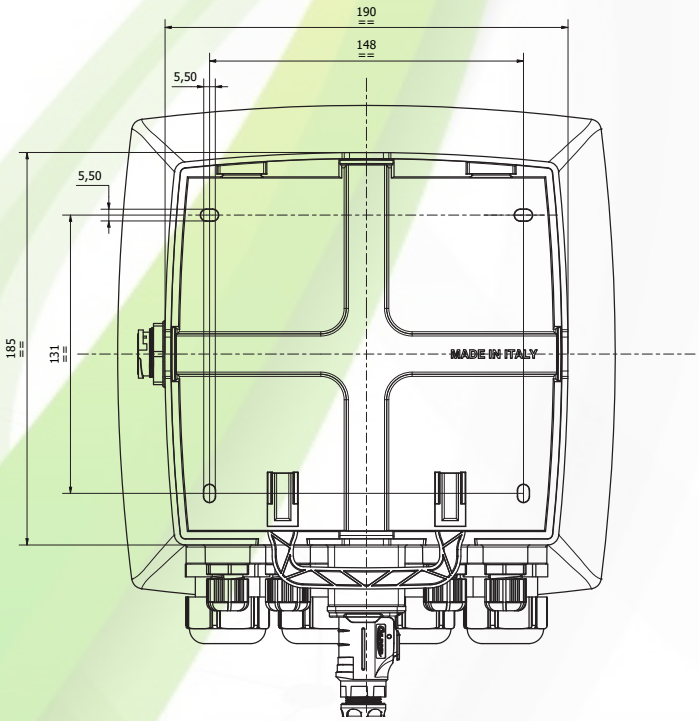


R4-11-24
Specs subject to change without advise

Via Donatori di Sangue, 1 - 02100 Rieti (Italy)
+39 074622841 | emecpumps.com

Specifications subject to change without notice | R2025

emec SIMPLE AS WATER

IQNET CERTIFIED MANAGEMENT SYSTEM
quality austria SYSTEM CERTIFIED
ISO 9001:2015 No.07728/0
ISO 14001:2015 No.00997/0
ISO 45001:2018 No.01121/0

# CENTURIO POOL

## MULTIPARAMETERS CONTROL SYSTEM FOR POOL

## CONFIGURATIONS

| INSTRUMENT CONFIGURATION | PLUS | WHEN | REQUIREMENTS | FUNCTION |
|---|---|---|---|---|
| **USB** | USB output | You do not need a PC on your plant: you can download data log on a USB device | / | RS485 output to link other EMEC instruments<br>Data Log on USB device |
| **ETHERNET** | LAN network between instrument and web | Remote control via WEB NIMBUS | LAN wiring (RJ-45) | RS485 output to link other EMEC instruments<br>Web NIMBUS remote control (PC, smartphone or tablet)<br>Alarm messages via email |
| **MODBUS** | Connection to other devices (PLC) via RS485 | PLC plant management | / | PLC connection output for reading and modifying parameters |
| **GSM/GPRS** [1] | 3G/4G modem between instrument and web | Remote control via WEB NIMBUS | Network coverage | RS485 output to link other EMEC instruments<br>Web NIMBUS remote control (PC, smartphone or tablet)<br>Alarm messages via email<br>Alarm messages via SMS |
| **WIFI** [1] | WIFI network between instrument and web | Remote control via WEB NIMBUS | Network coverage | RS485 output to link other EMEC instruments<br>Web NIMBUS remote control (PC, smartphone or tablet)<br>Alarm messages via email |

[1] **Option**