JA

Data Sheet

RACK MOUNTING (96X96) SINGLE READING SYSTEMS

JA / JA PRO control instruments are a series of **rack mounting (96x96)** single reading systems.

It can set and monitor: pH, ORP, chlorine (depending on the probe: total chlorine, free chlorine, chlorine dioxide, hydrogen peroxide, ozone, bromine or paracetic acid) and conductivity with **automatic range and probe / product selection (uS/S - Ohm - TDS / PPM - Concentration H3PO4 - H2SO4 - HNO3 - HCl - NaOH - NaCl)**

JA models have: 2 setpoints (on/off, proportional), 0-20 mA or 4-20 mA output proportional to read value and programmable in the reading range and flow input.

JA PRO models version have: 2 setpoints (on/off, proportional), standby input, flow input, alarm output, 0-20 mA or 4-20 mA output proportional to read value and programmable in the reading range, opto coupled output, MODBUS communication.

Avalilable also low voltage 9-18VDC or 18-36VDC power supply.

Controller accuracy: 0,3% based on full scale reading.

Available IP54 protection cover.

R30925

JA PRO Modbus

MODELS

JA	JA PRO	MEASURE
JAPH	**JAPH PRO**	pH
JARH	**JARH PRO**	ORP
JACL	**JACL PRO**	Chlorine
JACD	**JACD PRO**	Conductivity
JACDIND	**JACDIND PRO**	Inductive Conductivity

INPUT SIGNAL
pH / ORP: BNC; impedance > 10^{12} Ω
Chlorine / Conductivity: connection board

FLOW INPUT

2 ON/OFF / PROPORTIONAL / PID (JAPRO only) OUTPUT
free voltage contact

OPTO COUPLED OUTPUT (JA PRO only)
To use with "IS" , "MF" , "PLUS" series pumps

ALARM OUTPUT (JA PRO only)
free voltage contact

CURRENT OUTPUT
Programmable 0/4-20mA (max 350 Ohm) galvanic isolated

TEMPERATURE COMPENSATION
PT100 sensor (0-200°C)

DELAY
Programmable delay at startup for probe polarization.

DISPLAY
Backlight LCD display.

POWER SUPPLY
85-264VAC; 18-36VAC; 9-18VDC or 18-36VDC; 50/60 Hz

STAND-BY INPUT (JAPRO only)

MODBUS RTU PROTOCOL (JAPRO only)

EASY USER INTERFACE WITH NAVI-KEYS SYSTEM

PASSWORD PROTECTED SETTINGS

OPTION
IP54 PROTECTION

Via Donatori di Sangue, 1 - 02100 Rieti (Italy)
+39 074622841 | emecpumps.com

Specifications subject to change without notice | R2025

emec SIMPLE AS WATER

IQNET CERTIFIED MANAGEMENT SYSTEM
qualityaustria SYSTEM CERTIFIED
ISO 9001:2015 No.07728/0
ISO 14001:2015 No.00997/0
ISO 45001:2018 No.01121/0

JA

Data Sheet

RACK MOUNTING (96X96) SINGLE READING SYSTEMS

DIMENSIONS JA

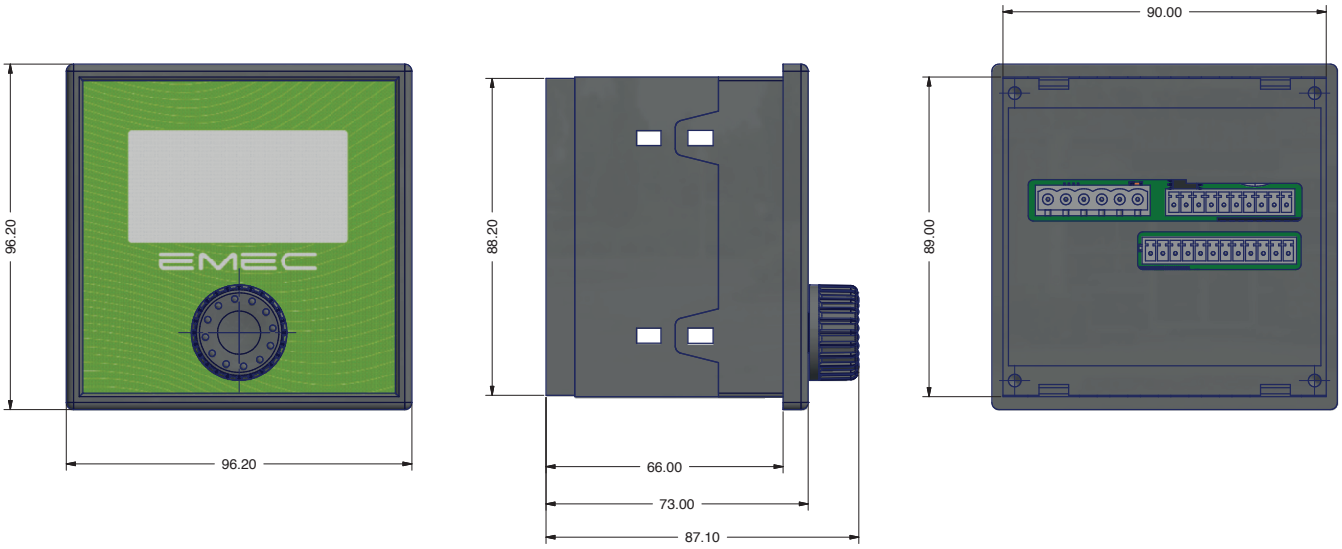

OPTIONS

IP54 PROTECTION

DIMENSIONS PROTECTION IP54

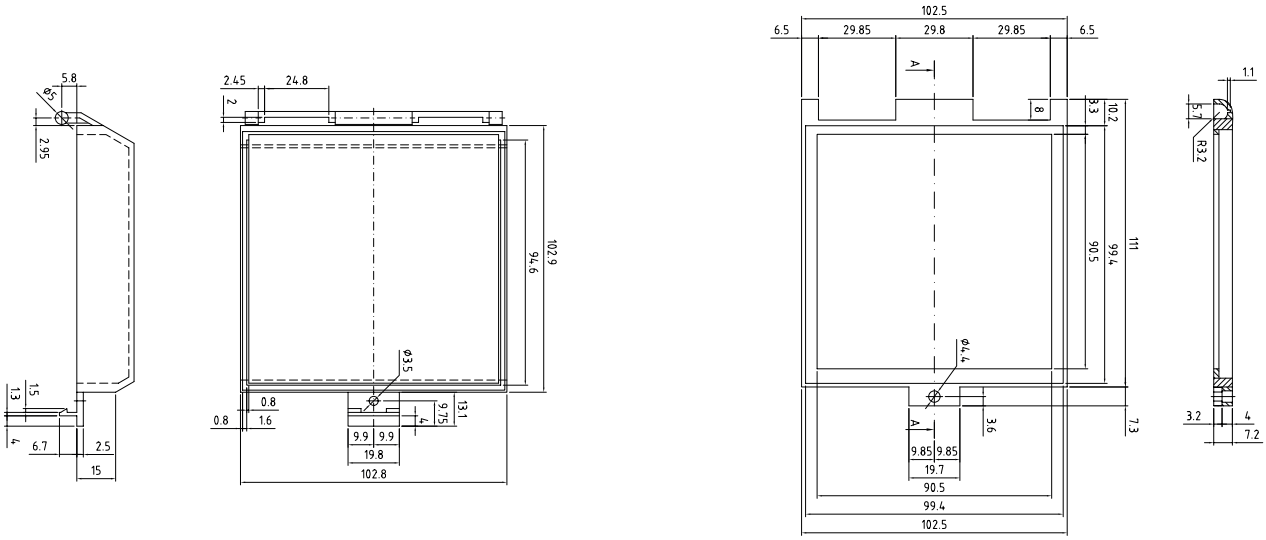

Via Donatori di Sangue, 1 - 02100 Rieti (Italy)
+39 074622841 | emecpumps.com

Specifications subject to change without notice | R2025

emec SIMPLE AS WATER

IQNET CERTIFIED MANAGEMENT SYSTEM

qualityaustria SYSTEM CERTIFIED

ISO 9001:2015 No.07728/0
ISO 14001:2015 No.00997/0
ISO 45001:2018 No.01121/0

JAPH

	JAPH	JAPH PRO
MEASURE	pH	
RANGE	0-14 pH; resolution: 0,01	
TEMPERATURE COMPENSATION	PT100	
INPUT SIGNAL	BNC; impedance > 10^{12} Ω	
POWER SUPPLY	24, 115, 230 VAC; 50/60 Hz	
FUSE	0,5 A	
AVERAGE CONSUMPTION	4 W	
FUNCTIONS	2 Setpoints (Volt-Free Relay Contact) Flow input pH probe Temperature probe Programmable 0/4-20mA (max 500 Ohm) galvanic isolated	2 Setpoints (Volt-Free Relay Contact) Flow input pH probe Temperature probe Programmable 0/4-20mA (max 500 Ohm) galvanic isolated Alarm Output (Volt-Free Relay Contact) Stand-by Input MODBUS RTU Opto Coupled Pulse Output
ENVIRONMENT TEMPERATURE	0°C ... 50°C (32°F ... 122°F) / 0-95% (non condensing) relative humidity	
PROTECTION	IP40 - on request IP54	
POLLUTION LEVEL	2	
ENCLOSURE MATERIAL	PP	
TEST/CERTIFICATION	CE	
DIMENSIONS	refer to the drawing	
INSTALLATION	rack mounting	

JARH

	JARH	JARH PRO
MEASURE	ORP	
RANGE	-999/+1999 mV; resolution: 1	
TEMPERATURE COMPENSATION	PT100	
INPUT SIGNAL	BNC; impedance > 10^{12} Ω	
POWER SUPPLY	24, 115, 230 VAC [1]; 50/60 Hz	
FUSE	0,5 A	
AVERAGE CONSUMPTION	4 W	
CURRENT OUTPUT	Programmable 0/4-20mA (max 500 Ohm) galvanic isolated	
FUNCTIONS	2 Setpoints (Volt-Free Relay Contact) Flow input ORP probe Temperature probe Programmable 0/4-20mA (max 500 Ohm) galvanic isolated	2 Setpoints (Volt-Free Relay Contact) Flow input ORP probe Temperature probe Programmable 0/4-20mA (max 500 Ohm) galvanic isolated Alarm Output (Volt-Free Relay Contact) Stand-by Input MODBUS RTU Opto Coupled Pulse Output
ENVIRONMENT TEMPERATURE	0°C ... 50°C (32°F ... 122°F) / 0-95% (non condensing) relative humidity	
PROTECTION	IP40 - on request IP54	
POLLUTION LEVEL	2	
ENCLOSURE MATERIAL	PP	
TEST/CERTIFICATION	CE	
DIMENSIONS	refer to the drawing	
INSTALLATION	rack mounting	

RACK MOUNTING (96X96) SINGLE READING SYSTEMS

JACL

	JACL	JACL PRO
MEASURE	Total chlorine Free Chlorine Chlorine Dioxide Hydrogen Peroxyde Ozone Bromine Peracetic Acid	
RANGE	autorange scale from 0 to 9999 (nS/uS/mS/S)	
TEMPERATURE COMPENSATION	PT100	
INPUT SIGNAL	Board	
POWER SUPPLY	24, 115, 230 VAC [1]; 50/60 Hz	
FUSE	0,5 A	
AVERAGE CONSUMPTION	4 W	
CURRENT OUTPUT	Programmable 0/4-20mA (max 500 Ohm) galvanic isolated	
FUNCTIONS	2 Setpoints (Volt-Free Relay Contact) Flow input Chlorine probe Temperature probe Programmable 0/4-20mA (max 500 Ohm) galvanic isolated	2 Setpoints (Volt-Free Relay Contact) Flow input Chlorine probe Temperature probe Programmable 0/4-20mA (max 500 Ohm) galvanic isolated Alarm Output (Volt-Free Relay Contact) Stand-by Input MODBUS RTU Opto Coupled Pulse Output
ENVIRONMENT TEMPERATURE	0°C ... 50°C (32°F ... 122°F) / 0-95% (non condensing) relative humidity	
PROTECTION	IP40 - on request IP54	
POLLUTION LEVEL	2	
ENCLOSURE MATERIAL	PP	
TEST/CERTIFICATION	CE	
DIMENSIONS	refer to the drawing	
INSTALLATION	rack mounting	

JACD

	JACD	JACD PRO
MEASURE	Conductivity (µS-S) - default setting	Conductivity (µS-S) - default setting
	Resistance (Ohm)	Resistance (Ohm)
	TDS (total dissolved solids) / ppm	TDS (total dissolved solids) / ppm
	/	Concentration (H3PO4 - H2SO4 - HNO3 - HCl - NaOH - NaCl)
RANGE	0.1µS-100mS (K=1) 0.01µS-10mS (K=0.1) 0.001uS-1mS (K=0.01) 1uS-1S (K=10)	
TEMPERATURE COMPENSATION	PT100	
INPUT SIGNAL	Board	
POWER SUPPLY	24, 115, 230 VAC [1]; 50/60 Hz	
FUSE	0,5 A	
AVERAGE CONSUMPTION	4 W	
CURRENT OUTPUT	Programmable 0/4-20mA (max 500 Ohm) galvanic isolated	
FUNCTIONS	2 Setpoints (Volt-Free Relay Contact) Flow input Conductivity probe Temperature probe Programmable 0/4-20mA (max 500 Ohm) galvanic isolated	2 Setpoints (Volt-Free Relay Contact) Flow input Conductivity probe Temperature probe Programmable 0/4-20mA (max 500 Ohm) galvanic isolated Alarm Output (Volt-Free Relay Contact) Stand-by Input MODBUS RTU Opto Coupled Pulse Output
ENVIRONMENT TEMPERATURE	0°C ... 50°C (32°F ... 122°F) / 0-95% (non condensing) relative humidity	
PROTECTION	IP40 - on request IP54	
POLLUTION LEVEL	2	
ENCLOSURE MATERIAL	PP	
TEST/CERTIFICATION	CE	
DIMENSIONS	refer to the drawing	
INSTALLATION	rack mounting	

JACD IND

	JACD IND	JACD IND PRO
MEASURE	Inductive Conductivity (mS-S) - default setting	Inductive Conductivity (µS-S) - default setting
	Resistance (Ohm)	Resistance (Ohm)
	TDS (total dissolved solids) / ppm	TDS (total dissolved solids) / ppm
	/	Concentration (H3PO4 - H2SO4 - HNO3 - HCl - NaOH - NaCl)
RANGE	0-3.000 mS 0-300.0 mS	
TEMPERATURE COMPENSATION	PT100	
INPUT SIGNAL	Board	
POWER SUPPLY	24, 115, 230 VAC [1]; 50/60 Hz	
FUSE	0,5 A	
AVERAGE CONSUMPTION	4 W	
CURRENT OUTPUT	Programmable 0/4-20mA (max 500 Ohm) galvanic isolated	
FUNCTIONS	2 Setpoints (Volt-Free Relay Contact) Flow input Conductivity I. probe Temperature probe Programmable 0/4-20mA (max 500 Ohm) galvanic isolated	2 Setpoints (Volt-Free Relay Contact) Flow input Conductivity I. probe Temperature probe Programmable 0/4-20mA (max 500 Ohm) galvanic isolated Alarm Output (Volt-Free Relay Contact) Stand-by Input MODBUS RTU Opto Coupled Pulse Output
ENVIRONMENT TEMPERATURE	0°C ... 50°C (32°F ... 122°F) / 0-95% (non condensing) relative humidity	
PROTECTION	IP40 - on request IP54	
POLLUTION LEVEL	2	
ENCLOSURE MATERIAL	PP	
TEST/CERTIFICATION	CE	
DIMENSIONS	refer to the drawing	
INSTALLATION	rack mounting	