"LD LOG"

Data Sheet

DESCRIPTION

LDLOG is a data log system.
LDLOG permanently collects data by a maximum of four pulse emitter water meters and four flow sensors connected to the dosing pumps to record the chemical consumption and the amount of water treated.

In Advanced USB configuration collected data are stored in a USB-pen and secured against unauthorized access.

LDLOG shows daily, monthly and annual data.

DATA LOG showed on display

Remote control via ERMES in Ethernet and GSM/GPRS configurations.

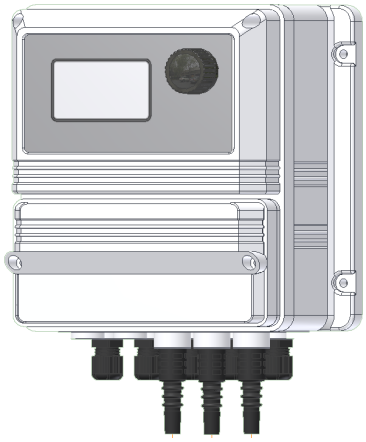

FEATURES

INPUT
4 flow sensors input
4 pulse sender water meter input

LOG FORMAT FILE
CSV / EMC

PROTECTION
IP 64

INPUT SIGNAL
BNC

POWER SUPPLY
90-265 VAC; 50/60 Hz

AVERAGE CONSUMPTION
25 W

ENVIRONMENT
-10 - 50°C (14 - 122°F)
0-95% (non condensing) relative humidity

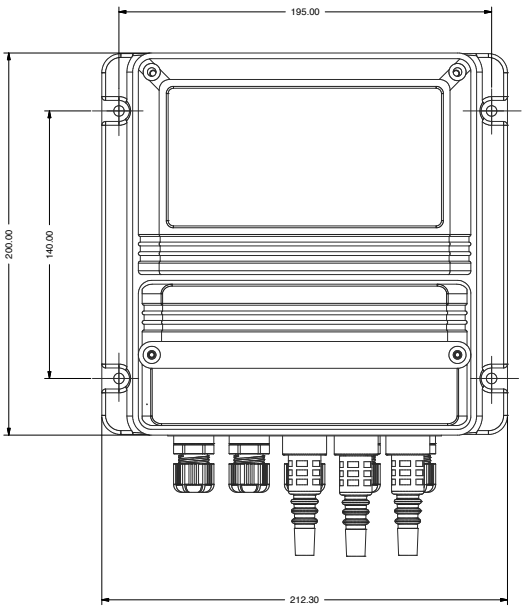

FRONT

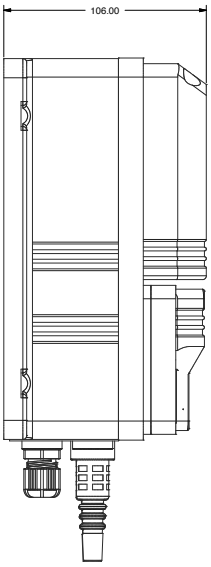

SIDE

Via Donatori di Sangue, 1 - 02100 Rieti (Italy)
+39 074622841 | emecpumps.com

Specifications subject to change without notice | R2025

emec SIMPLE AS WATER

IQNET CERTIFIED MANAGEMENT SYSTEM
qualityaustria SYSTEM CERTIFIED
ISO 9001:2015 No.07728/0
ISO 14001:2015 No.00997/0
ISO 45001:2018 No.01121/0

"LD LOG mA"

Data Sheet

DESCRIPTION

LDLOG mA is a data log system.
LDLOG mA controller records on a USB device (i.e.: pendrive) the chemical consumption and the quantity remaining into the tank, up to four.

Collected data are stored in a USB-pen and secured against unauthorized access.

Display shows daily, monthly and annual dosed quantity and quantity remaining into tanks.

DATA LOG showed on display

End product alarm.

Remote control via ERMES.

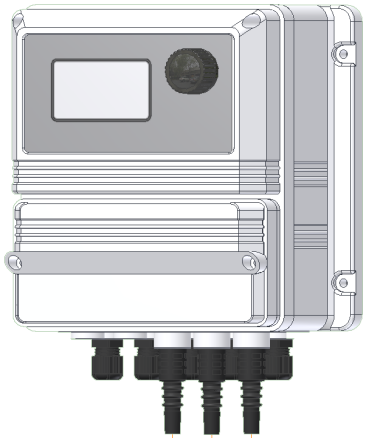

FEATURES

INPUT
4 mA input (0-20 mA) for ultrasonic level sensor (mod. ELU)

LOG FORMAT FILE
CSV / EMC

PROTECTION
IP 64

INPUT SIGNAL
BNC

POWER SUPPLY
90-265 VAC; 50/60 Hz

AVERAGE CONSUMPTION
25 W

ENVIRONMENT
-10°C ÷ 50°C (14°F ÷ 122°F)
0÷95% (non condensing) relative humidity

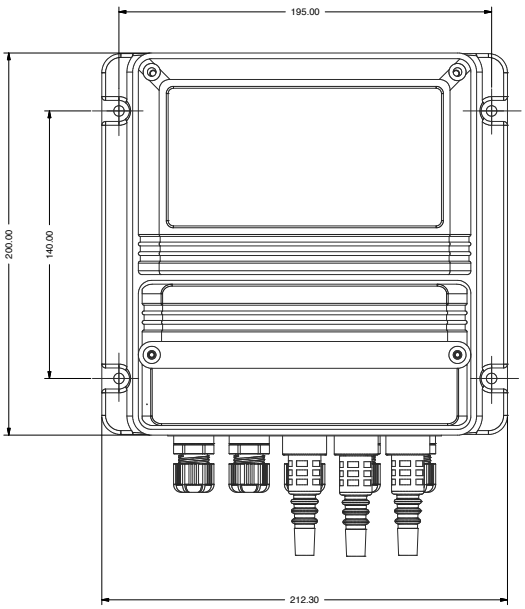

FRONT

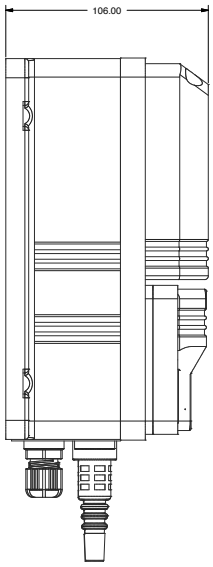

SIDE

Via Donatori di Sangue, 1 - 02100 Rieti (Italy)
+39 074622841 | emecpumps.com

Specifications subject to change without notice | R2025

emec SIMPLE AS WATER

IQNET CERTIFIED MANAGEMENT SYSTEM
qualityaustria SYSTEM CERTIFIED
ISO 9001:2015 No.07728/0
ISO 14001:2015 No.00997/0
ISO 45001:2018 No.01121/0