"VMS" series Metering Pumps

Data Sheet

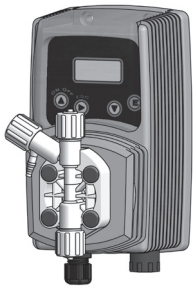

CE

c UL us LISTED (on request)

- Wall mounted, with dispaly
- Microprocessor technology
- Manual venting PVDF pump head
- All liquid ends (pump head, injection valve, foot filter) are in PVDF

Power supply:.....230 VAC (190-265 VAC) - 50/60 Hz
.....115 VAC (90-135 VAC) - 50/60 Hz
.....24 VAC (20-32 VAC) - 50/60 Hz
.....24 VDC (20-32 VDC)
.....12 VDC (10-16 VDC)

Pump Strokes.....0-180
Environment Temperature:.....0-45°C (32-113°F)
Chemical Temperature:.....0-50°C (32-122°F)
Packaging and Transporting Temperature: .....-10-50°C
Installation Class:.....II
Pollution Level:.....2
Audible Noise:.....70,4 db(A)
Protection Degree Rating:.....IP65 (% working RU: 85% T<=40°C; 70% T=50°C -
..... without condensing water)
Max altitude:.....2000 m

VMS all models 12VDC equipped with 1Ω magnet then fuse is 5A T, with 3.5Ω magnet then fuse is 1,25A T
VMS all models 24VDC equipped with 1Ω magnet then fuse is 6.3A T, with 3.5Ω magnet then fuse is 2A

Configuration Code

MODEL		
CODE	MODEL	FUNCTION
MF	"VMS MF"	Digital multifunction pump (Constant, Divide, Multiply, PPM, Batch, Volt, mA, %, ml/q, timer), with level control. Recovery fault mode, work-pause mode and upkeep mode.
PH	"VMS PH"	Proportional pump driven by internal built-in pH meter (0-14pH) and level control, supplied without probe. Also available with mA output (0/4 - 20 mA).
PO	"VMS PO"	Proportional dosing pump with level control, driven by internal built-in pH or Redox (ORP) meter (electrode not included)..

CAPACITIES				
VMS Models			Hoses	Pump head
2001	1 l/h at 20 bar	0.26 GPH at 290 PSI	4 x 8	J
1802	2 l/h at 18 bar	0.52 GPH at 261 PSI	4 x 8	K
1804	4 l/h at 18 bar	1.05 GPH at 261 PSI	4 x 8	K
1502	2 l/h at 15 bar	0.52 GPH at 217 PSI	4 x 6	K
1504	4 l/h at 15 bar	1.05 GPH at 217 PSI	4 x 6	K
1505	5 l/h at 15 bar	1.32 GPH at 217 PSI	4 x 6	K
1004	4 l/h at 10 bar	1.05 GPH at 145 PSI	4 x 6	K
1005	5 l/h at 10 bar	1.32 GPH at 145 PSI	4 x 6	K
1010	10 l/h at 10 bar	2.64 GPH at 145 PSI	4 x 6	K
0706	6 l/h at 7 bar	1.58 GPH at 101 PSI	4 x 6	K
0510	10 l/h at 5 bar	2.64 GPH at 72 PSI	4 x 6	K
0512	12 l/h at 5 bar	3.17 GPH at 72 PSI	4 x 6	K
0501	1 l/h at 5 bar	0.26 GPH at 72 PSI	4 x 6	J
0408	8 l/h at 4 bar	2.11 GPH at 58 PSI	4 x 6	K
0310	10l/h at 3 bar	2.64 GPH at 43 PSI	4 x 6	K
0215	15/h at 2 bar	3.96 GPH at 29 PSI	6 x 8	K
0116	16l/h at 1 bar	4.22 GPH at 14 PSI	6 x 8	K

Model V MF 2001 4 00 00

LIQUID ENDS								
	HEAD	ORINGS	VALVES		DIAPHRAGM	HOSES		VISCOSITY
			Body	Balls		Delivery	Suction	Max CPS
1	PVDF	FKM B	PVDF	Ceramic	PTFE	PE	PVC	100
2	PVDF	EPDM	PVDF	Ceramic	PTFE	PE	PVC	100
4*	PVDF	FKM B	PVDF	Ceramic	PTFE	PE	PVC	100
5*	PVDF	EPDM	PVDF	Ceramic	PTFE	PE	PVC	100
V	PP	FKM B	PP	Ceramic	PTFE	PVDF	PVC	100
D	PP	EPDM	PP	Ceramic	PTFE	PVDF	PVC	100
W	PP	Nytrile	PP	Ceramic	PTFE	PVDF	PVC	100

* Use for capacities up to 1 l/h.

POWER SUPPLY	
00	230 VAC Schuko plug
0S	230 VAC australian plug
01	230 VAC without plug
03	115 VAC US plug
04	24 VAC without plug
05	12 VDC *
07	24 VDC

* On some models only.

Via Donatori di Sangue, 1 - 02100 Rieti (Italy)
+39 074622841 | emecpumps.com

Specifications subject to change without notice | R2025

emec SIMPLE AS WATER

IQNET CERTIFIED MANAGEMENT SYSTEM
qualityaustria SYSTEM CERTIFIED
ISO 9001:2015 No.07728/0
ISO 14001:2015 No.00997/0
ISO 45001:2018 No.01121/0

"VMS" series Metering Pumps

Data Sheet

Technical features

INFORMATION					
MODEL	Strokes speed		Power consumption at max flow (230 VAC)	Power consumption at max flow (115 VAC)	Weight
	min	max			
2001	1	180	16	13	2,2 KG (4.85 LBS)
1802	1	180	16	13	
1804	1	180	22	15	
1502	1	180	16	11	
1504	1	180	16	13	
1505	1	180	22	15	
1004	1	180	16	11	
1005	1	180	16	13	
1010	1	180	22	15	
0706	1	180	16	11	
0510	1	180	16	13	
0512	1	180	22	15	
0501	1	180	16	11	
0408	1	180	16	11	
0310	1	180	16	11	
0215	1	180	16	13	
0116	1	180	16	13	

CAPACITY						
MODEL	FLOW			cc per STROKE	Maximum pressure	
	min cc/h	max l/h	Max GPH		bar	PSI
2001	0.09	1	0.26	0.09	20	290
1802	0.19	2	0.53	0.19	18	261
1804	0.37	4	1.06	0.37	18	261
1502	0.19	2	0.53	0.19	15	217
1504	0.37	4	1.06	0.37	15	217
1505	0.46	5	1.32	0.46	15	217
1004	0.37	4	1.06	0.37	10	145
1005	0.46	5	1.32	0.46	10	145
1010	0.93	10	2.64	0.93	10	145
0706	0.56	6	1.58	0.56	7	101
0510	0.93	10	2.64	0.93	5	72
0512	1.11	12	3.17	1.11	5	72
0501	0.09	1	0.26	0.09	5	72
0408	0.74	8	2.11	0.74	4	58
0310	0.93	10	2.64	0.93	3	43
0215	1.39	15	3.96	1.39	2	29
0116	1.48	16	4.23	1.48	1	14

FUSE		
MODEL	230 VAC	115 VAC
2001	1	500
1802	1	500
1804	1.25	630
1502	800	400
1504	1	500
1505	1.25	630
1004	800	400
1005	1	500
1010	1.25	630
0706	800	400
0510	1	500
0512	1.25	630
0501	800	400
0408	800	400
0310	800	400
0215	1.25	630
0116	1	500

QUANTITY	PACKAGE CONTENT
n. 1	Assembly kit
n. 1	5 X 20 delayed fuse
n. 1	Level probe with axial foot filter (PVDF) (level probe not in CO model)
n. 1	0,3 Bar injection valve (PVDF)
m 2	Delivery hose
m 2	Suction hose
m 2	Discharge hose
m 2,5	Input signal cable
n.1	Operating manual

POWER SUPPLY
230 VAC (190-265 VAC)
115 VAC (90-135 VAC)
24 VAC (20-32 VAC)
12 VDC (10-16 VDC)

Via Donatori di Sangue, 1 - 02100 Rieti (Italy)
+39 074622841 | emecpumps.com

Specifications subject to change without notice | R2025

emec SIMPLE AS WATER

IQNET CERTIFIED MANAGEMENT SYSTEM

qualityaustria SYSTEM CERTIFIED
ISO 9001:2015 No.07728/0
ISO 14001:2015 No.00997/0
ISO 45001:2018 No.01121/0

Dimension

mm [inches]

DIMENSIONS		
	mm	*inches*
A	106.96	4.21
B	210.44	8.28
C	199.44	7.85
D	114.50	4.50
E	187.96	7.40
F	97.00	3.81
G	106.96	4.21
H	125.47	4.93
L	50.00	1.96

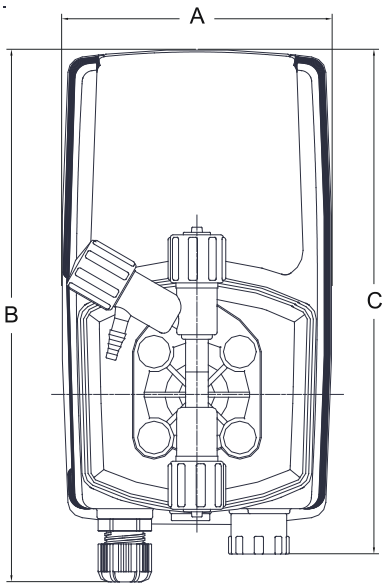

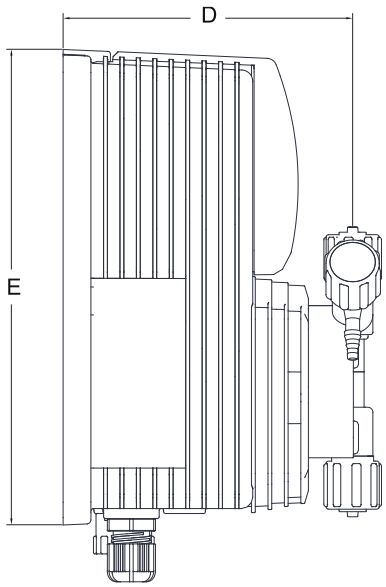

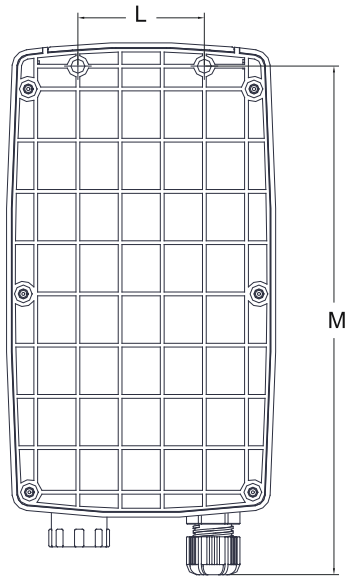

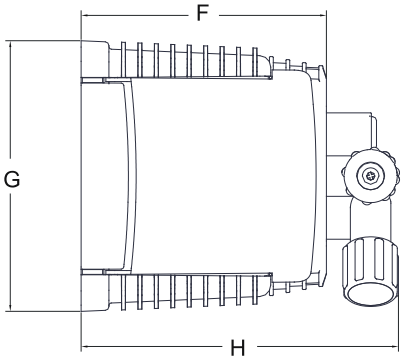

Via Donatori di Sangue, 1 - 02100 Rieti (Italy)
+39 074622841 | emecpumps.com

Specifications subject to change without notice | R2025

emec
SIMPLE AS WATER

IQNET CERTIFIED MANAGEMENT SYSTEM
qualityaustria
SYSTEM CERTIFIED
ISO 9001:2015 No.07728/0
ISO 14001:2015 No.00997/0
ISO 45001:2018 No.01121/0

"VMSA" Self Venting series Metering Pumps

Data Sheet

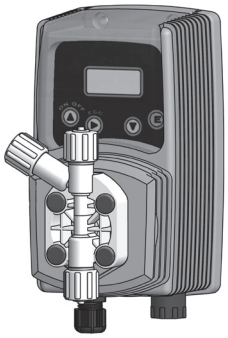

- Wall mounted, with display
- Microprocessor technology
- Self venting PVDF pump head
- All liquid ends (pump head, injection valve, foot filter) ....PVDF
- Enclosure .....PPO
- Environment temperature.....10-45°C (55-113°F)
- Chemical temperature.....0-50°C (32-122°F)
- Transportation and storage temperature.....-10-50°C (14-122°F)
- Installation class II
- Pollution level 2
- Audible noise.....70.4db(A)
- Protection degree .....IP65 (% working RU: 85% T<=40°C; 70% T=50°C - without condensing water)

CE

UL US LISTED (on request)

Configuration Code

MODEL		
CODE	MODEL	FUNCTION
AF	"VMSA MF"	Digital multifunction pump (Constant, Divide, Multiply, PPM, Batch, Volt, mA, %, ml/q), with level control. Recovery fault mode, work-pause mode and upkeep mode.
AO	"VMSA PO"	Proportional pump driven by internal built-in pH meter (0-14pH) and level control, supplied without probe. Also available with mA output (0/4 - 20 mA).
AN	"VMSA EN"	Pump with weekly timer, microprocessor, digital controls, LCD display, level probe and electrovalve control.

CAPACITIES				
V Models			Hoses	Pump head
1802	2 l/h at 18 bar	0.52 GPH at 261 PSI	4 x 8	KA
1503	3 l/h at 15 bar	0.79 GPH at 217 PSI	4 x 6	KA
1501	1 l/h at 10 bar	0.26 GPH at 217 PSI	4 x 6	KA
103,4	3,4 l/h at 10 bar	0.89 GPH at 145 PSI	4 x 6	KA
1007	7 l/h at 10 bar	1.84 GPH at 145 PSI	4 x 6	KA
1002	2 l/h at 10 bar	0.52 GPH at 145 PSI	4 x 6	KA
0704	4 l/h at 7 bar	1.05 GPH at 101 PSI	4 x 6	KA
057,5	7,5 l/h at 5 bar	1.98 GPH at 72 PSI	4 x 6	KA
0509	9 l/h at 5 bar	2.37 GPH at 72 PSI	4 x 6	KA
045,5	5,5 l/h at 4 bar	1.45 GPH at 58 PSI	4 x 6	KA
0307	7 l/h at 3 bar	1.84 GPH at 43 PSI	4 x 6	KA
0212	12 l/h at 2 bar	3.2 GPH at 29 PSI	6 x 8	KA
0113,5	13,5 l/h at 1 bar	3.56 GPH at 14 PSI	6 x 8	KA

Model	V	AN	1802	4	00	00

LIQUID ENDS								
	HEAD	ORINGS	VALVES		DIAPHRAGM	HOSES		VISCOSITY
			Body	Balls		Delivery	Suction	Max CPS
1	PVDF	FKM B	PVDF	Ceramic	PTFE	PE	PVC	100
3	PVDF	EPDM	PVDF	Ceramic	PTFE	PE	PVC	100
4*	PVDF	FKM B	PVDF	Ceramic	PTFE	PE	PVC	100
5*	PVDF	EPDM	PVDF	Ceramic	PTFE	PE	PVC	100
V	PP	FKM B	PP	Ceramic	PTFE	PVDF	PVC	100
D	PP	EPDM	PP	Ceramic	PTFE	PVDF	PVC	100
W	PP	Nytrile	PP	Ceramic	PTFE	PVDF	PVC	100

* Use for capacities up to 1 l/h.

POWER SUPPLY	
00	230 VAC Schuko plug
0S	230 VAC australian plug
01	230 VAC without plug
03	115 VAC US plug
04	24 VAC without plug
05	12 VDC *
07	24 VDC

* On some models only.

Via Donatori di Sangue, 1 - 02100 Rieti (Italy)
+39 074622841 | emecpumps.com

Specifications subject to change without notice | R2025

emec SIMPLE AS WATER

IQNET CERTIFIED MANAGEMENT SYSTEM

qualityaustria SYSTEM CERTIFIED
ISO 9001:2015 No.07728/0
ISO 14001:2015 No.00997/0
ISO 45001:2018 No.01121/0

"VMSA" Self Venting series Metering Pumps

Data Sheet

Technical features

INFORMATION					
Models	**Strokes speed**		**Power consumption at max flow (230 VAC)**	**Power consumption at max flow (115 VAC)**	**Weight**
	min	max			
	Strokes hour	Strokes minute			
1802	1	180	22 Watt	15 Watt	2,2 KG (4.85 LBS)
1503	1	180	22 Watt	15 Watt	
1501	1	180	16 Watt	11 Watt	
103,4	1	180	16 Watt	13 Watt	
1007	1	180	22 Watt	15 Watt	
1002	1	180	16 Watt	11 Watt	
0704	1	180	16 Watt	11 Watt	
057,5	1	180	16 Watt	13 Watt	
0509	1	180	22 Watt	15 Watt	
045,5	1	180	16 Watt	11 Watt	
0307	1	180	16 Watt	11 Watt	
0212	1	180	16 Watt	13 Watt	
0113,5	1	180	16 Watt	13 Watt	

MORE INFORMATION ABOUT VMSA MODELS						
Model	FLOW			cc per STROKE	Maximum pressure	
	min cc/h	max l/h	Max GPH		bar	PSI
1802	0.19	2	0.53	0.19	18	261
1503	0.28	3	0.79	0.28	18	217
1501	0.09	1	0.26	0.09	15	217
103,4	0.31	3.4	0.9	0.31	10	145
1007	0.65	7	1.85	0.65	10	145
1002	0.19	2	0.53	0.19	10	145
0704	0.37	4	1.06	0.37	7	101
057,5	0.69	7.5	1.98	0.69	5	72
0509	0.83	9	2.38	0.83	5	72
045,5	0.51	5.5	1.45	0.51	4	58
0307	0.65	7	1.85	0.65	3	43
0212	1.11	12	3.17	1.11	2	29
0113,5	1.25	13.5	3.57	1.25	1	14

QUANTITY	PACKAGE CONTENT
n. 1	Assembly kit
n. 1	5 X 20 delayed fuse
n. 1	Level probe with axial foot filter (PVDF)
n. 1	0,3 Bar injection valve (PVDF)
m 2	Delivery hose
m 2	Suction hose
m 2	Discharge hose
m 2,5	Input signal cable
n.1	Operating manual

POWER SUPPLY
230 VAC (190÷265 VAC)
115 VAC (90÷135 VAC)
24 VAC (20÷32 VAC)
12 VDC (10÷16 VDC)

FUSE		
MODEL	**230 VAC**	**115 VAC**
1802	1.25 A	1.25 A
1503	1.25 A	1.25 A
1501	800 mA	800 mA
103,4	1 A	1 A
1007	1.25 A	1.25 A
1002	800 mA	800 mA
0704	800 mA	800 mA
057,5	1 A	1 A
0509	1.25 A	1.25 A
045,5	800 mA	800 mA
0307	800 mA	800 mA
0212	1.25 A	1.25 A
0113,5	1 A	1 A

Via Donatori di Sangue, 1 - 02100 Rieti (Italy)
+39 074622841 | emecpumps.com

Specifications subject to change without notice | R2025

emec SIMPLE AS WATER

IQNET CERTIFIED MANAGEMENT SYSTEM
qualityaustria SYSTEM CERTIFIED
ISO 9001:2015 No.07728/0
ISO 14001:2015 No.00997/0
ISO 45001:2018 No.01121/0

Dimension

mm [inches]
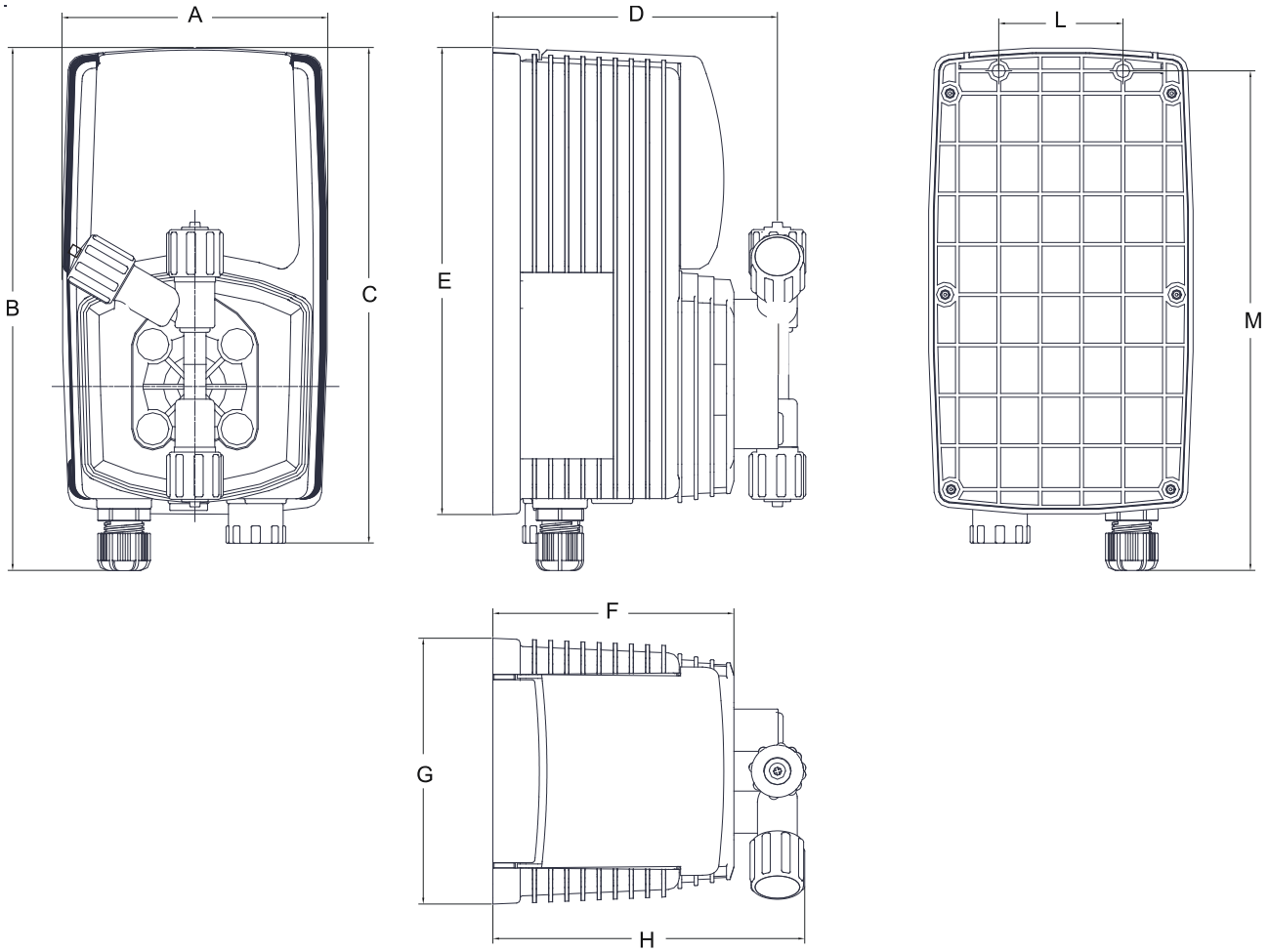
DIMENSIONS		
	mm	*inches*
A	106.96	4.21
B	210.44	8.28
C	199.44	7.85
D	114.50	4.50
E	187.96	7.40
F	97.00	3.81
G	106.96	4.21
H	125.47	4.93
L	50.00	1.96
M	201.00	7.91