"AMS DIGITAL" series Metering Pumps

Data Sheet

"AMSA DIGITAL Self Venting"

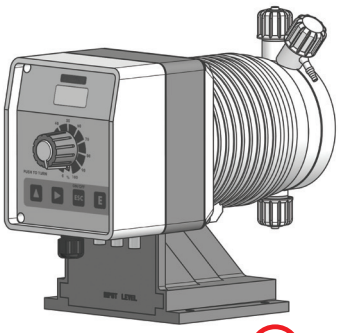

- Foot mounted, with display
- Microprocessor technology
- Manual stroke length adjustment
- Manual venting (AMS) or self venting (AMSA) pump head
- Enclosure .....PP
- Environment temperature.....10–45°C (55–113°F)
- Chemical temperature.....0–50°C (32–122°F)
- Transportation and storage temperature.....10–50°C (55–122°F)
- Altitude .....2000 m AMSL
- Installation class II
- Pollution level.....2
- Audible noise.....57.4db(A)
- Protection degree .....IP65 (% working RU: 85% T<=40°C; 70% T=50°C - without condensing water)

CE

c UL us LISTED upon request

Configuration code

MODELS			
AMS Digital	AMSA Digital	MOD.	DESCRIPTION
DC	-	"DC"	Digital constant pump, stand-by input and alarm output and level control.
MF	AF	"MF"	Digital multifunction pump (Constant, Divide, Multiply, PPM, Batch, Volt, mA, %, ml/q) , stand-by and flow sensor input, alarm output and level control. Recovery fault mode, work-pause mode and upkeep mode.
PH	AA	"PH"	Proportional pump driven by internal built-in pH meter (0-14 pH) and level control, supplied without pH probe. Stand-by input.
RH	AH	"RH"	Proportional pump driven by internal built-in ORP meter (0-1000 mV) and level control, supplied without ORP probe. Stand-by input.

CAPACITY					
AMS			Delivey hose (PVDF)	Suction hose	Pump head mod.
2505	5 l/h at 25 bar	1.32 GPH at 362 PSI	4 x 6	4 x 6	L
1510	10 l/h at 15 bar	2.64 GPH at 217 PSI	4 x 6	4 x 6	M
1015	15 l/h at 10 bar	3.96 GPH at 145 PSI	6 x 8	6 x 8	M
0720	20 l/h at 7 bar	5.28 GPH at 101 PSI	6 x 8	6 x 8	N
0340	40 l/h at 3 bar	10.56 GPH at 43 PSI	8 x 10	8 x 12	S
0260	60 l/h at 2 bar	15.85 GPH at 29 PSI	8 x 10	8 x 12	T
AMSA			Delivey hose (PVDF)	Suction hose	Pump head mod.
253.2	3.2 l/h at 25 bar	0.85 GPH at 362 PSI	4 x 6	4 x 6	LA
1506	6 l/h at 15 bar	1.59 GPH at 217 PSI	4 x 6	4 x 6	MA
1010	10 l/h at 10 bar	2.64 GPH at 145 PSI	6 x 8	6 x 8	MA
0713	13 l/h at 7 bar	3.43 GPH at 101 PSI	6 x 8	6 x 8	NA
0330	30 l/h at 3 bar	7.9 GPH at 43 PSI	8 x 10	8 x 12	SA
0238,5	38,5 l/h at 2 bar	10.17 GPH at 29 PSI	8 x 10	8 x 12	TA

Model A MF 2505 K 00 00

LIQUID ENDS								
	HEAD	ORINGS	VALVE		DIAPHRAGM	HOSES [1]		VISCOSITY
			Body	Balls		Delivery	Suction	Max CPS
K	PVDF	FKM B	PVDF	Ceramic	PTFE	PVDF	PVC	100
P	PVDF	EPDM	PVDF	Ceramic	PTFE	PVDF	PVC	100
Y	PVDF	Nytrile	PVDF	Ceramic	PTFE	PVDF	PVC	100
V	PP	FKM B	PP	Ceramic	PTFE	PVDF	PVC	100
D	PP	EPDM	PP	Ceramic	PTFE	PE	PVC	100
W	PP	Nytrile	PP	Ceramic	PTFE	PE	PVC	100
J	PVDF	FKM B + PTFE	PVDF	Ceramic	PTFE	PVDF	PVC	100
S	PVDF	Silicone	PVDF	Ceramic	PTFE	PVDF	PVC	100
A	Acrylic	FKM B	PVDF	Ceramic	PTFE	PVDF	PVC	100
Z	SS [3]	FKM B	SS	SS	PTFE	N/A	N/A	100
$	Acrylic	FKM B	Polypropylene	SS + Hastelloy spring	PTFE	Polyethylen	PVC	8000 [2]

[1] Size may be different from standard.
[2] Using high viscosity pump head mod. $, pump output may results lower in some applications.
[3] Specify on order, the external thread of the valves: conical, cylindrical or NPT. Stainless Steel pump does not fit installation kit (accessories and hoses). Refer to "SS Accessories" table for fittings.

POWER SUPPLY	
00	230 VAC Schuko plug
0S	230 VAC australian plug
01	230 VAC without plug
03	115 VAC US plug
04	24 VAC without plug
05	12 VDC *
07	24 VDC

* On some models only.

SS ACCESSORIES [3]	
Pump head	Fittings
Li	3/8"
Mi	1/2"
Ni	1/2"
Si	3/4"

Via Donatori di Sangue, 1 - 02100 Rieti (Italy)
+39 074622841 | emecpumps.com

emec SIMPLE AS WATER

Specifications subject to change without notice | R2025

IQNET CERTIFIED MANAGEMENT SYSTEM
qualityaustria SYSTEM CERTIFIED
ISO 9001:2015 No.07728/0
ISO 14001:2015 No.00997/0
ISO 45001:2018 No.01121/0

"AMS DIGITAL" series Metering Pumps

"AMSA DIGITAL Self Venting"

Data Sheet

Technical features

INFORMATION								
AMS DIGITAL	Strokes speed		Stroke length range reliability	Power consumption at max flow (230 VAC)	Power consumption at max flow (115 VAC)	Power consumption at max flow (24 VDC)	Power consumption at max flow (12 VDC)	Weight
	min	max						
	strokes hour	strokes minute						
2505	1	120	from 30% to 100%	42 Watt	24 Watt	34 Watt	20 Watt	9 Kg (19.8 Lbs)
1510	1	120						
1015	1	120						
0720	1	120						
0340	1	120						
0260	1	120						
AMSA DIGITAL	Strokes speed		Stroke length range reliability	Power consumption at max flow (230 VAC)	Power consumption at max flow (115 VAC)	Power consumption at max flow (24 VDC)	Power consumption at max flow (12 VDC)	Weight
	min	max						
	strokes hour	strokes minute						
253.2	1	120	from 30% to 100%	42 Watt	24 Watt	34 Watt	20 Watt	9 Kg 19.8 Lbs)
1506	1	120						
1010	1	120						
0713	1	120						
0330	1	120						
0238,5	1	120						

MORE INFORMATION								
AMS DIGITAL	Flow				cc per Stroke		Max injection pressure	
	min cc/h	max l/h	Min GPH	Max GPH	min	max	bar	PSI
2505	0,21	5	0,039	1.32	0,21	0.70	25	362
1510	0,42	10	0,079	2.64	0,42	1.4	15	217
1015	0.62	15	0,118	3.96	0.62	2.08	10	217
0720	0,83	20	0,158	5.28	0,83	2.8	7	101
0340	1,67	40	0,317	10.56	1,67	5.6	3	43
0260	2,31	60	0,61	15.85	2,31	7,7	2	29
AMSA DIGITAL	Flow				cc per Stroke		Max injection pressure	
	min cc/h	max l/h	Min GPH	Max GPH	min	max	bar	PSI
253.2	0.44	3.2	0,025	0.85	0.13	0.44	25	362
1506	0.83	6	0,047	1.59	0.25	0.83	15	217
1010	1.39	10	0,079	2.64	0.48	1.39	10	217
0713	1.80	13	0,103	3.43	0.54	1.80	7	101
0330	4.16	30	0.33	7.9	1.25	4.16	3	43
0238.5	5.34	38.5	0.43	10.1	1.6	5.34	2	29

QUANTITY	PACKAGE CONTENT
n. 1	Assembly kit
n. 1	5 X 20 delayed fuse
n. 1	Level probe with axial foot filter (PVDF)
n. 1	0,3 Bar injection valve (PVDF)
m 2	Delivery hose
m 2	Suction hose
m 2	Discharge hose
m 2,5	Input signal cable
m 2	Alarm/Stand-by cable
n.1	Operating manual

POWER SUPPLY	FUSE
230 VAC (190–265 VAC)	1,25 A
115 VAC (90–135 VAC)	1,6 A
24 VAC (20–32 VAC)	6,3 A
12 VDC (10–16 VDC)	5 A

Via Donatori di Sangue, 1 - 02100 Rieti (Italy)
+39 074622841 | emecpumps.com

Specifications subject to change without notice | R2025

emec SIMPLE AS WATER

IQNET CERTIFIED MANAGEMENT SYSTEM
qualityaustria SYSTEM CERTIFIED
ISO 9001:2015 No.07728/0
ISO 14001:2015 No.00997/0
ISO 45001:2018 No.01121/0

"AMS DIGITAL" series Metering Pumps

Data Sheet

"AMSA DIGITAL Self Venting"

Dimensions

mm [inch]

"N" - "P" pump head

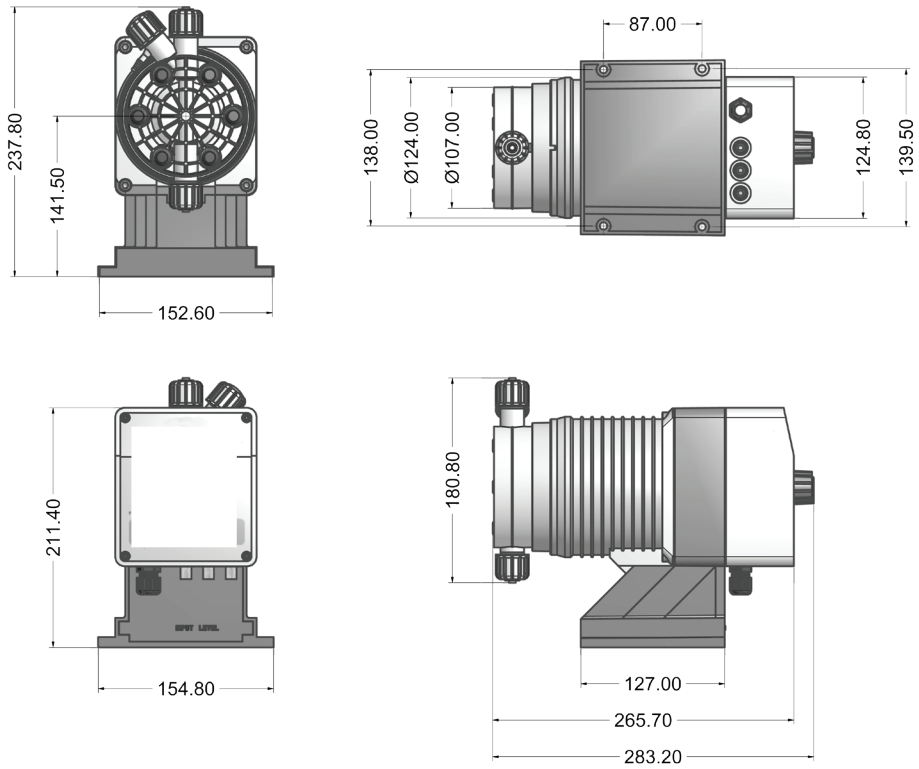

"S" - "T" pump head

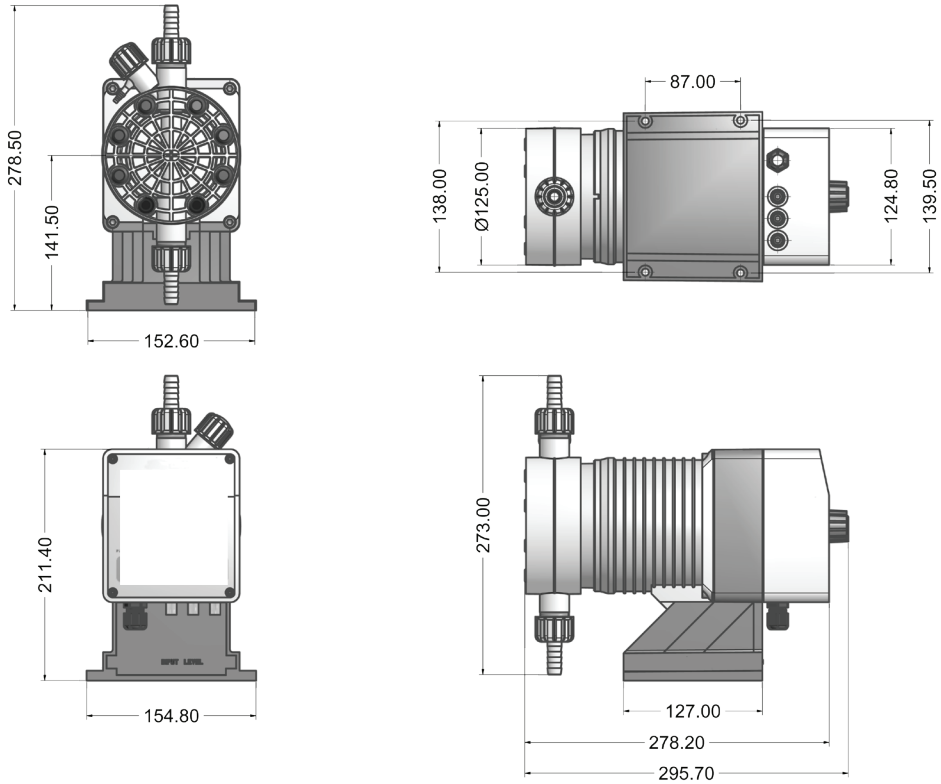

Via Donatori di Sangue, 1 - 02100 Rieti (Italy)
+39 074622841 | emecpumps.com

Specifications subject to change without notice | R2025

emec SIMPLE AS WATER

IQNET CERTIFIED MANAGEMENT SYSTEM

qualityaustria SYSTEM CERTIFIED

ISO 9001:2015 No.07728/0
ISO 14001:2015 No.00997/0
ISO 45001:2018 No.01121/0