# "SEFL" - FLOW SENSOR

Data Sheet

SEFL is a flow sensor device made for checking if the connected dosing pump is working properly by checking if a liquid is flowing through the pump's head.
It has a control knob to regulate sensibility for every kind of pump.

## FEATURES

- PVDF or PP or PMMA body
- N.C. contact
- Adjustable sensitivity
- FKM B or EPDM O-ring
- LPV version available for viscousity liquid application up 8000 cPs
- Max 45°C / 25 bar
- Activity LED on board
- Maximum electrical ratings of the SEFL
  Max current = 0.010 A
  Max Voltage = 24 VAC-DC
  Resistive load
- On request PMMA bracket for KMS MF or AMS MF mounting
- Max operating flow 150 l/h - Minimum: 1 l/h

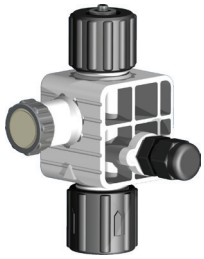

SEFL

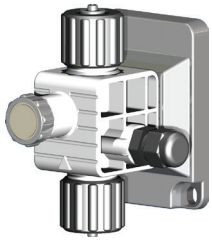

SEFLS (with bracket)

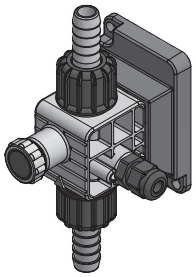

SEFLS 12x18/13x16

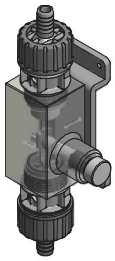

SEFLS PRIUS
(PRIUS >240l/h)

R2-09-20

## INSTALLATION

SEFL
(fittings for installation on the pump)

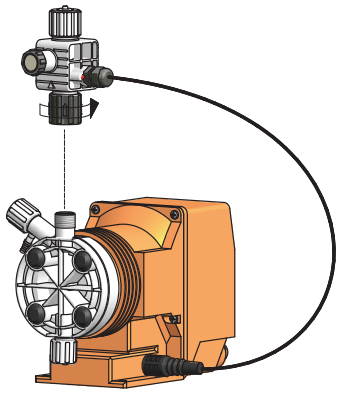

1. Install SEFL connecting it to the pump head discharge connection. Take out the discharge connection tube nut and screw the SEFL connection onto the discharge.

2. Install the discharge hose on the discharge point of SEFL (top) locking it tight.

3. Carry out the electrical wiring connecting the SEFL to the MF pump or any other pump with sefl input. Working mode is a continuous ON/OFF contact.

SEFLS
(bracket version. Hose fitting kit)

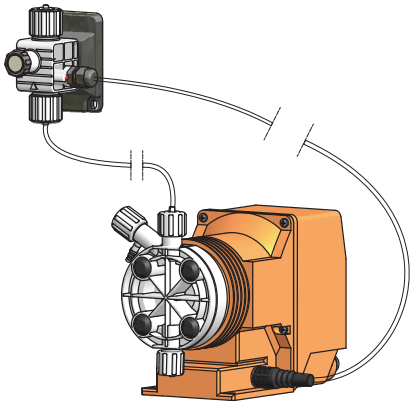

Via Donatori di Sangue, 1 - 02100 Rieti (Italy)
+39 074622841 | emecpumps.com

Specifications subject to change without notice | R2025

emec
SIMPLE AS WATER

IQNET CERTIFIED MANAGEMENT SYSTEM
qualityaustria
SYSTEM CERTIFIED
ISO 9001:2015 No.07728/0
ISO 14001:2015 No.00997/0
ISO 45001:2018 No.01121/0

## DIMENSIONS

**SEFL**

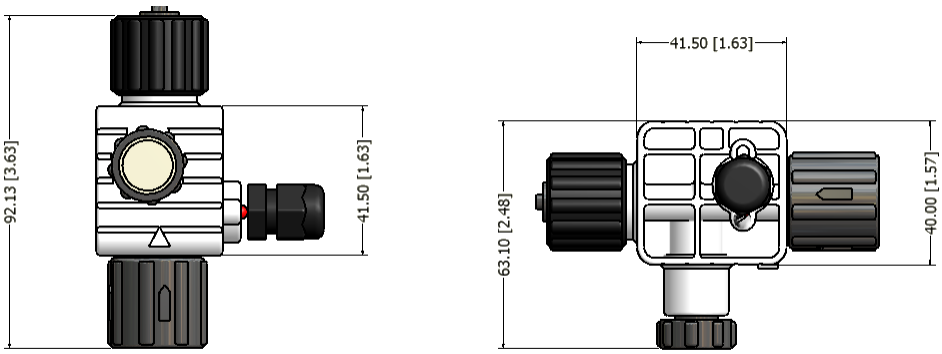


**SEFLS**

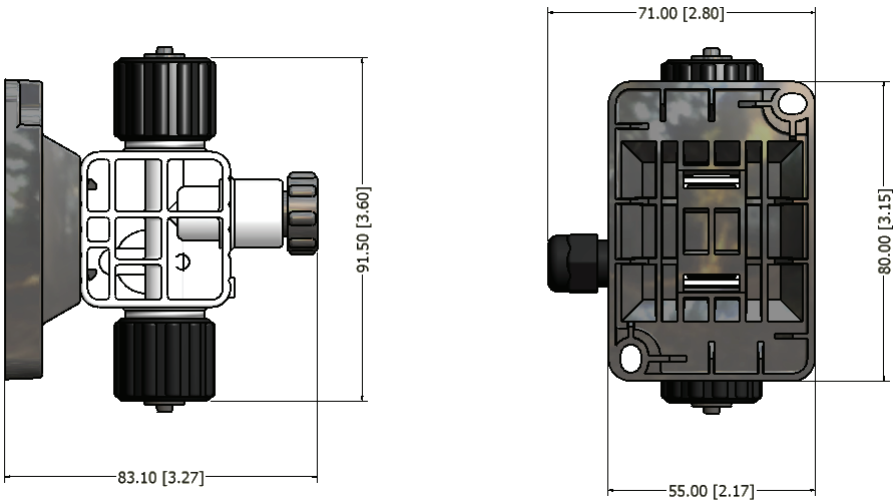


**SEFLS PMMA**

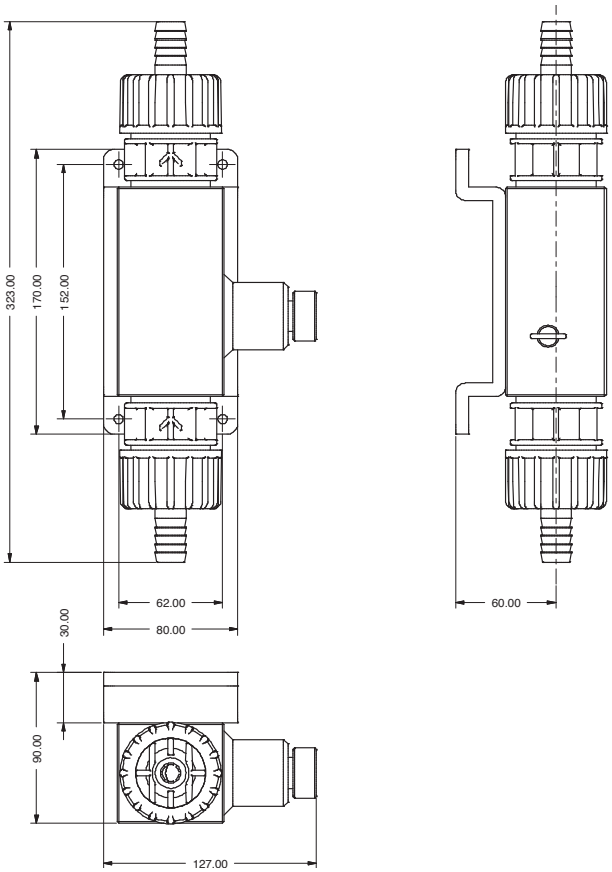


Via Donatori di Sangue, 1 - 02100 Rieti (Italy)
+39 074622841 | emecpumps.com

Specifications subject to change without notice | R2025

emec SIMPLE AS WATER

IQNET CERTIFIED MANAGEMENT SYSTEM
qualityaustria SYSTEM CERTIFIED
ISO 9001:2015 No.07728/0
ISO 14001:2015 No.00997/0
ISO 45001:2018 No.01121/0

# SEFL
## Flow sensors

> With activity LED

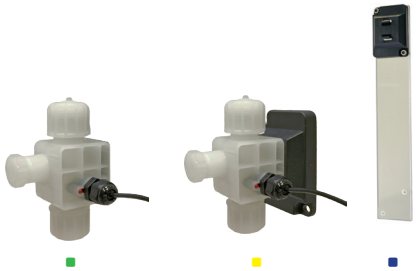

| model | material | o-ring | fitting | temperature (°C) | pressure (bar) | bracket and hose fixing kit |
|---|---|---|---|---|---|---|
| ■ **SEFL/D** | PP | EPDM | 1/2″- 3/8″ | 45 | 25 | - |
| ■ **SEFL/V** | PVDF | Fkm b | 1/2″- 3/8″ | 45 | 25 | - |
| ■ **SEFL/V/LPV** | PVDF | Fkm b | 1/2″- 3/8″ | 45 | 25 | - |
| ■ **SEFLS/D** | PP | EPDM | 1/2″- 3/8″ | 45 | 25 | ■ |
| ■ **SEFLS/V** | PVDF | Fkm b | 1/2″- 3/8″ | 45 | 25 | ■ |

### PMMA BRACKETS

| description |
|---|
| ■ Bracket for mounting on KMS MF |
| ■ Bracket for mounting on AMS MF |

### FLOW SENSOR

| model | materials |
|---|---|
| **SEFLMS/PRIUS 160/1000L** | Flow sensor for PRIUS MF |
| **SEFLMS/PRIUS 160/1000L** | Flow sensor for PRIUS MF |

### FLOW SENSOR

| code | model | description |
|---|---|---|
| SEFL V530020NX000 | **SEFL/V** | Flow sensor for Lotus: PVDF body, FKM B oring. |

Via Donatori di Sangue, 1 - 02100 Rieti (Italy)
+39 074622841 | emecpumps.com

Specifications subject to change without notice | R2025

emec SIMPLE AS WATER

IQNET CERTIFIED MANAGEMENT SYSTEM
qualityaustria SYSTEM CERTIFIED
ISO 9001:2015 No.07728/0
ISO 14001:2015 No.00997/0
ISO 45001:2018 No.01121/0

# "SEFL" - FLOW SENSOR

Data Sheet

## MODELS

| | BODY | FITTINGS | VALVES | O-RING | FLOATER | FLOW KNOB | CABLE |
|---|---|---|---|---|---|---|---|
| *SEFL/D* | PVDF | 1/2" - 3/8" | PVDF | EPDM | PTFE | PVDF | PE |
| *SEFL/V* | PVDF | 1/2" - 3/8" | PVDF | FKM B | PTFE | PVDF | PE |
| *SEFLS/D* | PVDF | 1/2" | PVDF | EPDM | PTFE | PVDF | PE |
| *SEFLS/V* | PVDF | 1/2" | PVDF | FKM B | PTFE | PVDF | PE |
| *SEFLP/D* | PP | 1/2" - 3/8" | PP | EPDM | PTFE | PP | PE |
| *SEFLP/V* | PP | 1/2" - 3/8" | PP | FKM B | PTFE | PP | PE |
| *SEFLPS/D* | PP | 1/2" | PP | EPDM | PTFE | PP | PE |
| *SEFLPS/V* | PP | 1/2" | PP | FKM B | PTFE | PP | PE |
| *SEFLS/D/PRIUS* [2] | PMMA | 1 1/2" - 18 | PVDF | EPDM | PTFE | PVDF | PE |
| *SEFLS/V/PRIUS* [2] | PMMA | 1 1/2" - 18 | PVDF | FKM B | PTFE | PVDF | PE |

[2] For PRIUS with TM pump head (capacity over 240 l/h) and UM pump head.

## CODE

| S | E | F | L | 5 | 6 | 7 | 8 | 9 | 10 | 11 | 12 | 13 | 14 | 15 | 16 | 17 | 18 |
|---|---|---|---|---|---|---|---|---|---|---|---|---|---|---|---|---|---|

**MODELS**

| | |
|---|---|
| SEFL | Flow sensor (PVDF) |
| SEFLS | Flow sensor (PVDF) + bracket |
| SEFLP | Flow sensor (PP) |
| SEFLPS | Flow sensor (PP) + bracket |

**O-RING**

| | |
|---|---|
| V | FKM B |
| D | EP |
| W | WAX |

**CABLE LENGTH (m)**

**LED**

| | |
|---|---|
| S | YES |
| N | NO |

**CUSTOMIZATION**

**CONNECTION**

| | |
|---|---|
| 0 | Without |
| 1 | 3/8" x PP |
| 2 | 3/8" x PVDF |
| 3 | 1/2" x PP |
| 4 | 1/2" x PVDF |

**FITTINGS**

| | |
|---|---|
| 1 | 1/2" 4X8 |
| 2 | 1/2 3/8" |
| 3 | 1/2" 4X6 |
| 4 | 1/2" 6X8 |
| 5 | 1/2" 8X12 |
| 6 | 1/2" 1/4" |
| 7 | 1/2" 1/2" |
| 9 | 1/2" 12X18 |
| E | 1/2" 13X16 |

**CONNECTOR**

| | |
|---|---|
| 0 | Without |
| 1 | BNC |
| 2 | 4-poles connector |

**PUMP FLOW**

| | |
|---|---|
| X | all capacities |
| C | For viscosity pumps (max 8000 cPs) |

## CODES FOR SEFLS/PRIUS

10882511 - SEFLS/PRIUS 1-1/2" FP
10882651 - SEFLS/PRIUS 1-1/2" EP