"SEFL" - FLOW SENSOR

Data Sheet

SEFL is a flow sensor device made for checking if the connected dosing pump is working properly by checking if a liquid is flowing through the pump's head.
It has a control knob to regulate sensibility for every kind of pump.

FEATURES

- PVDF or PP or PMMA body
- N.C. contact
- Adjustable sensitivity
- FKM B or EPDM O-ring
- LPV version available for viscousity liquid application up 8000 cPs
- Max 45°C / 25 bar
- Activity LED on board
- Maximum electrical ratings of the SEFL
  Max current = 0.010 A
  Max Voltage = 24 VAC-DC
  Resistive load
- On request PMMA bracket for KMS MF or AMS MF mounting
- Max operating flow 150 l/h - Minimum: 1 l/h

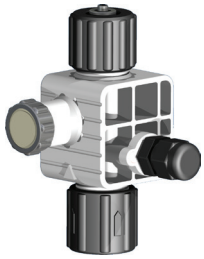

SEFL

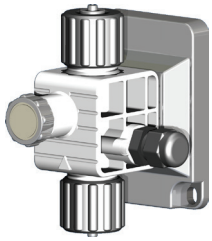

SEFLS (with bracket)

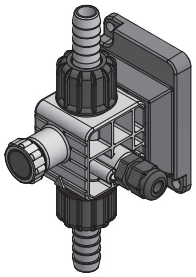

SEFLS 12x18/13x16

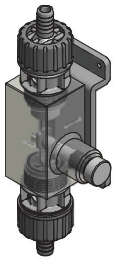

SEFLS PRIUS
(PRIUS >240l/h)

R2-09-20

INSTALLATION

SEFL
(fittings for installation on the pump)

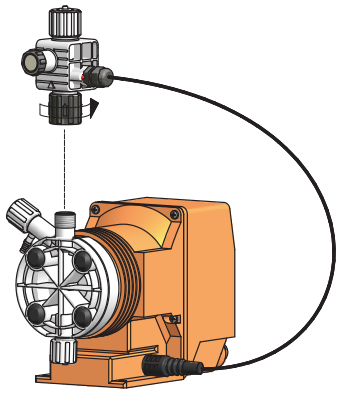

1. Install SEFL connecting it to the pump head discharge connection. Take out the discharge connection tube nut and screw the SEFL connection onto the discharge.

2. Install the discharge hose on the discharge point of SEFL (top) locking it tight.

3. Carry out the electrical wiring connecting the SEFL to the MF pump or any other pump with sefl input. Working mode is a continuous ON/OFF contact.

SEFLS
(bracket version. Hose fitting kit)

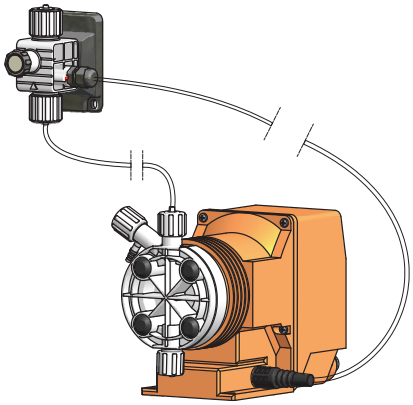

Via Donatori di Sangue, 1 - 02100 Rieti (Italy)
+39 074622841 | emecpumps.com

Specifications subject to change without notice | R2025

emec
SIMPLE AS WATER

IQNET CERTIFIED MANAGEMENT SYSTEM
qualityaustria
SYSTEM CERTIFIED
ISO 9001:2015 No.07728/0
ISO 14001:2015 No.00997/0
ISO 45001:2018 No.01121/0

DIMENSIONS

SEFL

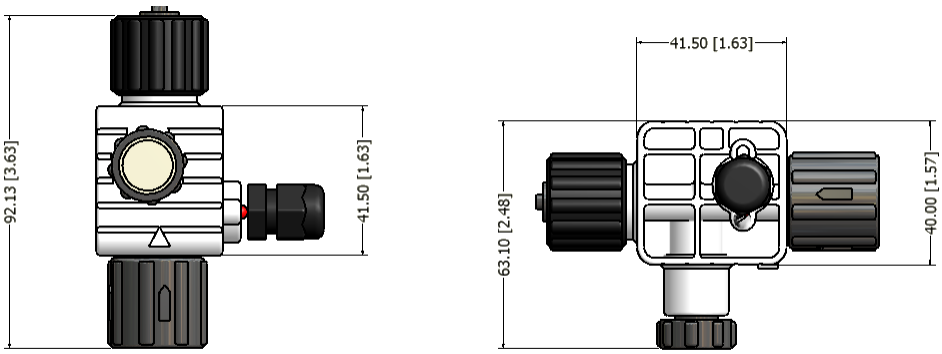

SEFLS

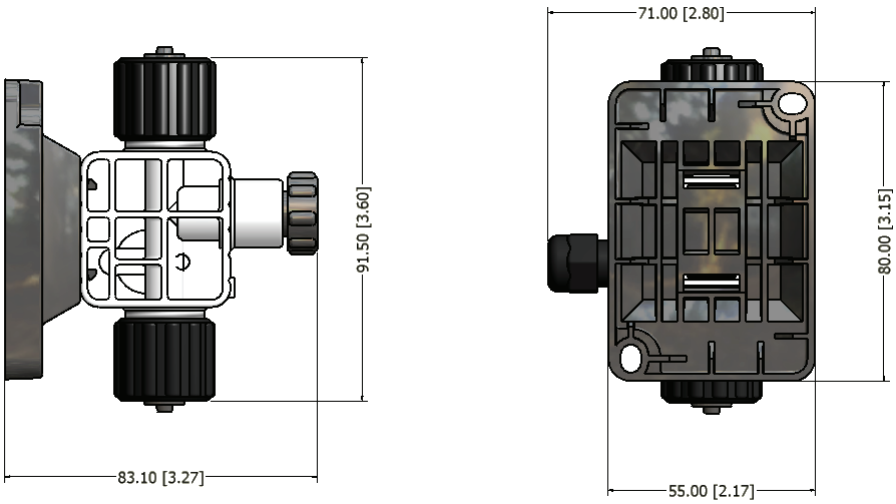

SEFLS PMMA

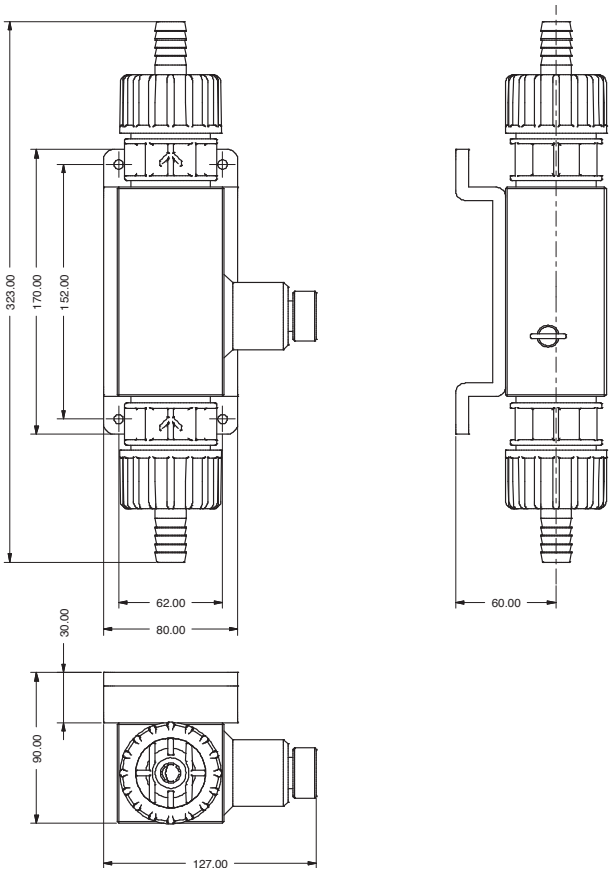

Via Donatori di Sangue, 1 - 02100 Rieti (Italy)
+39 074622841 | emecpumps.com

Specifications subject to change without notice | R2025

emec SIMPLE AS WATER

IQNET CERTIFIED MANAGEMENT SYSTEM
qualityaustria SYSTEM CERTIFIED
ISO 9001:2015 No.07728/0
ISO 14001:2015 No.00997/0
ISO 45001:2018 No.01121/0

SEFL
Flow sensors

> With activity LED

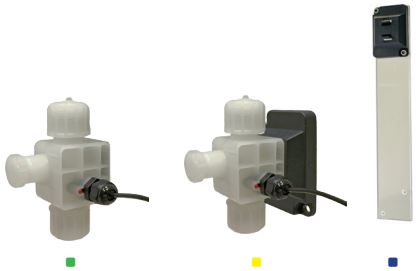

model	material	o-ring	fitting	temperature (°C)	pressure (bar)	bracket and hose fixing kit
■ **SEFL/D**	PP	EPDM	1/2″- 3/8″	45	25	-
■ **SEFL/V**	PVDF	Fkm b	1/2″- 3/8″	45	25	-
■ **SEFL/V/LPV**	PVDF	Fkm b	1/2″- 3/8″	45	25	-
■ **SEFLS/D**	PP	EPDM	1/2″- 3/8″	45	25	■
■ **SEFLS/V**	PVDF	Fkm b	1/2″- 3/8″	45	25	■

PMMA BRACKETS

description
■ Bracket for mounting on KMS MF
■ Bracket for mounting on AMS MF

FLOW SENSOR

model	materials
SEFLMS/PRIUS 160/1000L	Flow sensor for PRIUS MF
SEFLMS/PRIUS 160/1000L	Flow sensor for PRIUS MF

FLOW SENSOR

code	model	description
SEFL V530020NX000	**SEFL/V**	Flow sensor for Lotus: PVDF body, FKM B oring.

Via Donatori di Sangue, 1 - 02100 Rieti (Italy)
+39 074622841 | emecpumps.com

Specifications subject to change without notice | R2025

emec SIMPLE AS WATER

IQNET CERTIFIED MANAGEMENT SYSTEM
qualityaustria SYSTEM CERTIFIED
ISO 9001:2015 No.07728/0
ISO 14001:2015 No.00997/0
ISO 45001:2018 No.01121/0

"SEFL" - FLOW SENSOR

Data Sheet

MODELS

	BODY	FITTINGS	VALVES	O-RING	FLOATER	FLOW KNOB	CABLE
SEFL/D	PVDF	1/2" - 3/8"	PVDF	EPDM	PTFE	PVDF	PE
SEFL/V	PVDF	1/2" - 3/8"	PVDF	FKM B	PTFE	PVDF	PE
SEFLS/D	PVDF	1/2"	PVDF	EPDM	PTFE	PVDF	PE
SEFLS/V	PVDF	1/2"	PVDF	FKM B	PTFE	PVDF	PE
SEFLP/D	PP	1/2" - 3/8"	PP	EPDM	PTFE	PP	PE
SEFLP/V	PP	1/2" - 3/8"	PP	FKM B	PTFE	PP	PE
SEFLPS/D	PP	1/2"	PP	EPDM	PTFE	PP	PE
SEFLPS/V	PP	1/2"	PP	FKM B	PTFE	PP	PE
SEFLS/D/PRIUS [2]	PMMA	1 1/2" - 18	PVDF	EPDM	PTFE	PVDF	PE
SEFLS/V/PRIUS [2]	PMMA	1 1/2" - 18	PVDF	FKM B	PTFE	PVDF	PE

[2] For PRIUS with TM pump head (capacity over 240 l/h) and UM pump head.

CODE

S	E	F	L	5	6	7	8	9	10	11	12	13	14	15	16	17	18

MODELS

SEFL	Flow sensor (PVDF)
SEFLS	Flow sensor (PVDF) + bracket
SEFLP	Flow sensor (PP)
SEFLPS	Flow sensor (PP) + bracket

O-RING

V	FKM B
D	EP
W	WAX

CABLE LENGTH (m)

LED

S	YES
N	NO

CUSTOMIZATION

CONNECTION

0	Without
1	3/8" x PP
2	3/8" x PVDF
3	1/2" x PP
4	1/2" x PVDF

FITTINGS

1	1/2" 4X8
2	1/2 3/8"
3	1/2" 4X6
4	1/2" 6X8
5	1/2" 8X12
6	1/2" 1/4"
7	1/2" 1/2"
9	1/2" 12X18
E	1/2" 13X16

CONNECTOR

0	Without
1	BNC
2	4-poles connector

PUMP FLOW

X	all capacities
C	For viscosity pumps (max 8000 cPs)

CODES FOR SEFLS/PRIUS

10882511 - SEFLS/PRIUS 1-1/2" FP
10882651 - SEFLS/PRIUS 1-1/2" EP