PIPELINE MANIFOLD

PIPELINE MANIFOLD WITH FLOW SENSOR AND MOTORIZED EV

The pipeline manifold is a hydraulic circuit placed on a panel that standardizes the installation in order to reduce learning, execution and related errors. Therefore, it simplifies and improves the quality of the system to be implemented with a clear reduction in installation costs, due to the individual on-site design with the consequent search for the materials to be used.

Furthermore, the standardized installation homogenises the various systems, facilitating the learning and execution of maintenance.

- Motorized valve
- Ball valve water inlet
- Ball valve water outlet
- No-return valve
- Flow sensor
- 3 injection points
- Cross connection for conductivity and pH probe (Redox on request)

Model	Description	Hose
MANIFOLD/TUBI/EV 1"	Pipeline Manifold 2 points 230vac ecdc	1
MANIFOLD/TUBI/EV 1"	Pipeline Manifold 2 points 230vac ecdind	1
MANIFOLD/TUBI/EV 1-1/2"	Pipeline Manifold 2 points 230vac ecdind	1 1/2"
MANIFOLD/TUBI/EV 1-1/4"	Pipeline Manifold 2 points 230vac ecdind	1 1/4"
MANIFOLD/TUBI/EV 1-1/4"	Pipeline Manifold 2 points 230vac ecdcc	1 1/4"
MANIFOLD/TUBI/EV 2"	Pipeline Manifold 2 points 230vac ecdind	2
MANIFOLD/TUBI/EV 3/4"	Pipeline Manifold 2 points 230vac ecdind	3/4"
MANIFOLD/TUBI/EV 3/4"	Pipeline Manifold 2 points 230vac ecdc	3/4"

ACCESSORIES

Model	Description
SF/2F	Sf/2f flow sensor 2m x manifold controller
SF/2F	Sf/2f flow sensor 1m x manifold controller
SF/BNC	Sf/bnc flow sensor 2m x manifold
SF/BNC	Sf/bnc flow sensor 1m x manifold
MOTORIZED Electrovalve 1"	MOTORIZED Electrovalve 1" 230vac ip54
MOTORIZED Electrovalve 1" 24VAC	MOTORIZED Electrovalve 1" 24vac ip54
MOTORIZED Electrovalve 1-1/2"	MOTORIZED Electrovalve 1-1/2" 230vac ip54
MOTORIZED Electrovalve 1-1/4"	MOTORIZED Electrovalve 1-1/4" 230vac
MOTORIZED Electrovalve 2"	MOTORIZED Electrovalve 2" 230vac
MOTORIZED Electrovalve 3/4"	MOTORIZED Electrovalve 3/4" 230vac ip54
MOTORIZED Electrovalve 3/4" 24VAC	MOTORIZED Electrovalve 3/4" 24vac ip54

Via Donatori di Sangue, 1 - 02100 Rieti (Italy)
+39 074622841 | emecpumps.com

Specifications subject to change without notice | R2025

emec SIMPLE AS WATER

IQNET CERTIFIED MANAGEMENT SYSTEM
qualityaustria SYSTEM CERTIFIED
ISO 9001:2015 No.07728/0
ISO 14001:2015 No.00997/0
ISO 45001:2018 No.01121/0

DIMENSIONS OF MOTORIZED ELECTROVALVE (MM)

DIMENSIONS

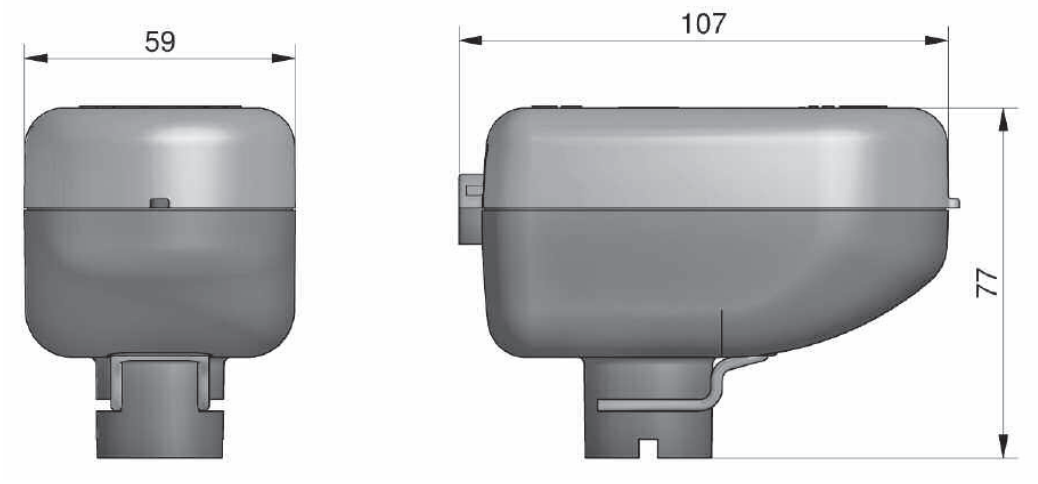

DIMENSIONS / HOSES

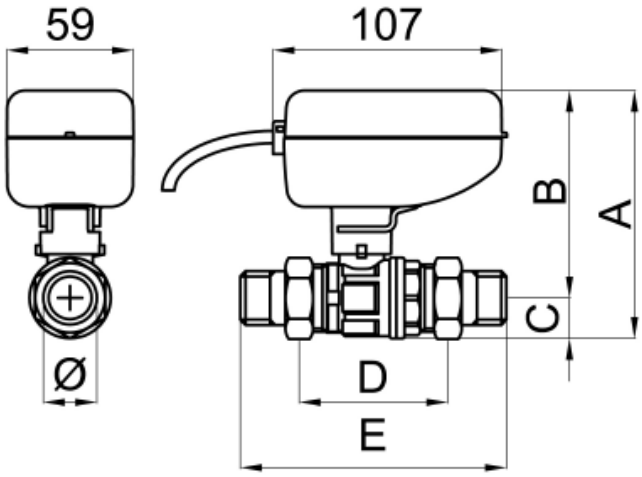

DN	ø TANG	ø VALVE BODY	A	B	C	D	E
15	1/2″	3/4″	111	94	17	63	118
20	3/4″	1″	120	100	20	67	128
25	1″	1″1/4	126	103	23	77	147

Via Donatori di Sangue, 1 - 02100 Rieti (Italy)
+39 074622841 | emecpumps.com

Specifications subject to change without notice | R2025

emec SIMPLE AS WATER

IQNET CERTIFIED MANAGEMENT SYSTEM
qualityaustria SYSTEM CERTIFIED
ISO 9001:2015 No.07728/0
ISO 14001:2015 No.00997/0
ISO 45001:2018 No.01121/0

DIMENSIONS WITH CONTROLLER (MM)

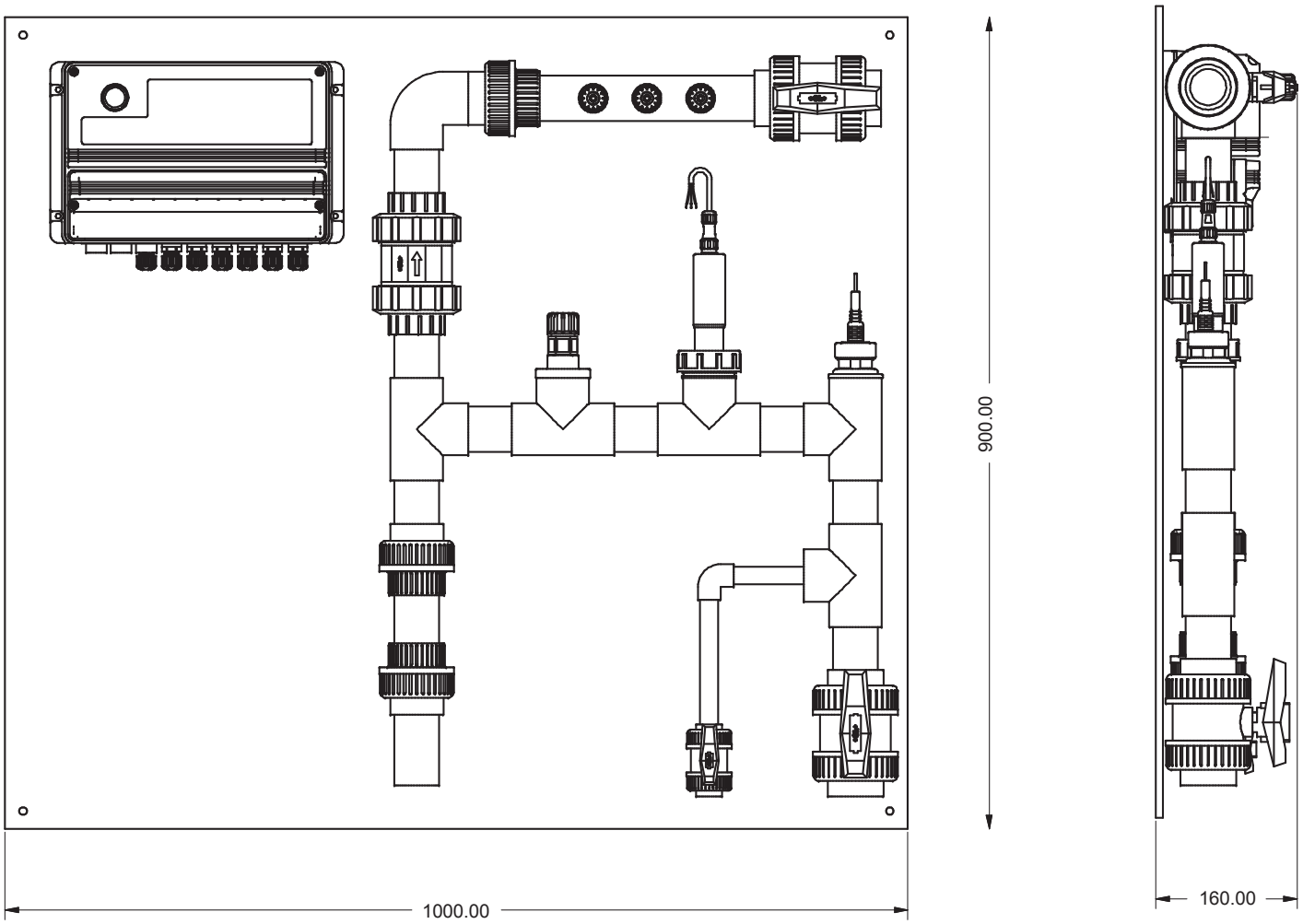

Via Donatori di Sangue, 1 - 02100 Rieti (Italy)
+39 074622841 | emecpumps.com

Specifications subject to change without notice | R2025

emec
SIMPLE AS WATER

IQNET CERTIFIED MANAGEMENT SYSTEM
qualityaustria
SYSTEM CERTIFIED
ISO 9001:2015 No.07728/0
ISO 14001:2015 No.00997/0
ISO 45001:2018 No.01121/0