R990525

AMS - AMSA - AMS AC

PRODUCT LABEL

AMS

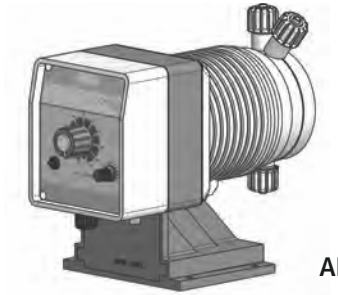

AMSA

AMS AC

SOLENOID DRIVEN METERING PUMPS
WITH DIAPHRAGM

EN

OPERATING MANUAL

This operating instructions contains safety information that if ignored can endanger life or result in serious injury.

Read these instructions **carefully** before use and keep them for future reference. Original instruction.

Information and specifications on this manual could be uncorrect or could have printing errors. Specifications are subject to change without notice.

Version: R1-01-14

Product Description *Descrizione Prodotto*	Electromagnetic dosing pump, AMS series *Pompa dosatrice elettromagnetiche, serie AMS*		
Product Identification Codes (the "_" symbols complete the product code based on the configuration of the variants) *Codici Identificativi Prodotto* *(i simboli "_" completano il codice del prodotto in base alla configurazione delle varianti)*	AMF _____ APH _____ ARH _____ AMU _____ ACP _____ AUO _____	AAF _____ AAA _____ AAR _____ AAU _____ AAL _____ AAC _____	AMC _____ ALA _____ AOA _____

GENERAL SAFETY GUIDELINES

Operating, installing, or maintaining the unit in any way that is not covered in this manual could cause death, serious personal injury, or damage to the equipment.

ICON

This manual use the following safety message icon:

Danger!
Indicates a hazardous situation which, if not avoided, will result in death or serious injury.

Warning!
Indicates a hazardous situation which, if not avoided, could result in death or serious injury.

Important - A practice not related to personal injury or additional information.

Cross reference - An instance which refers to related information elsewhere in the same document

PURPOSE OF USE AND SAFETY

METERING PUMP IS INTENDED FOR CHEMICAL DOSING AND DRINKING WATER TREATMENT.

Do not use in explosive area (EX).
Do not use with flammable chemicals.
Do not use with radioactive chemicals.

Use after a proper installation.

Use the pump in accordance with the data and specifications printed on the label.

Do not modify or use in a manner inconsistent with the provisions of the operating manual.

Keep the pump protected from sun and water. Avoid water splashes.

In emergencies the pump should be switched off immediately. Disconnect the power cable from the power supply.

When using pump with aggressive chemicals observe the regulations concerning the transport and storage of aggressive fluids.

When installing always observe national regulations.

Manufacturer is not liable for any unauthorized use or misuse of this product that may cause injury, damage to persons or materials.

Pump must be accessible at all times for both operating and servicing. Access must not be obstructed in any way.

Feeder should be interlocked with a no-flow protection device.

Pump and accessories must be serviced and repaired by qualified and authorized personnel only.

Before any operation:
- **always read chemical Material Safety Data Sheet (MSDS);**
- **always wear protective clothing;**
- **always discharge the liquid end before servicing the pump.**
- **empty and rinse the liquid end before work on a pump which has been used with hazardous or unknown chemicals.**

This equipment requires regular maintenance to ensure potability requirements of the water and maintenance of improvements as declared by the manufaturer.

ENVIRONMENTAL SAFETY

Work area
Always keep the pump area clean to avoid and/or discover emissions.

Recycling guidelines

EWC code: 16 02 14

Always recycle according to these guidelines:
1. If the unit or parts are accepted by an authorized recycling company, then follow local recycling laws and regulations.
2. If the unit or parts are not accepted by an authorized recycling company, then return them to the nearest representative.

Waste and emissions regulations
Observe these safety regulations regarding waste and emissions:
- Dispose appropriately of all waste.
- Handle and dispose of the dosed chemical in compliance with applicable environmental regulations.
- Clean up all spills in accordance with safety and environmental procedures.
- Report all environmental emissions to the appropriate authorities.

LABELS

Fig. 1. Product label.

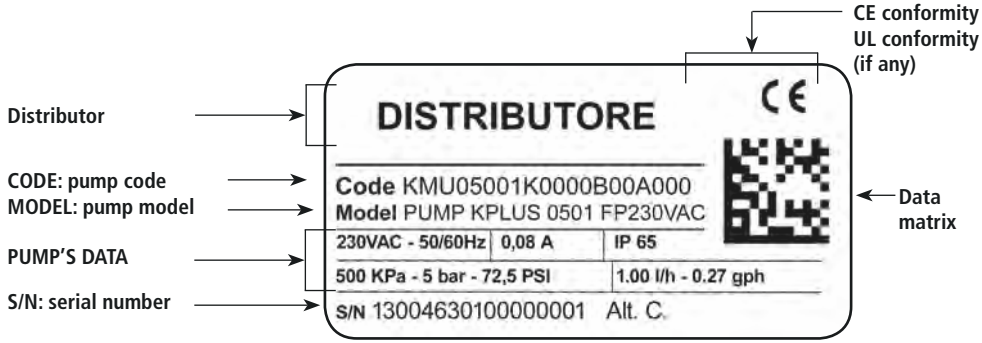

Spare parts

For spare parts orders or any other communication, refer to product label.
Code (CODE) and serial number (S / N) uniquely identify the pump.

Transportation and storage

A not suitable transportation or storage can cause damages.

Use origianal box to pack the pump.

Observe storage conditions also for transportation.

Although packed, always protect the unit against humidity and the action of chemicals.

Before return the dosing pump to the manufacturer Repair service, drain the chemical from pump head and rinse it. Refer to **Shutdown procedure.**

Fill the PRODUCT SERVICE REPAIR FORM and send it with the dosing pump.
Repair service is not accepted if PRODUCT SERVICE REPAIR FORM is missing.

DO NOT TRASH PACKAGING. USE IT TO RETURN THE PUMP.

Transportation and storage temperature ..... 10 - 50°C (32 - 122°F)
Umidity ..... 95% relative humidity (not condensed)

1. Introduction

1.1 AMS Series

AMS metering pumps are the ideal solution for low / middle dosing of chemicals.
Flow rate is determined by the stroke length and by the stroke speed. The stroke length is adjustable from 0 to 100% using the stroke length adjustment knob. However dosing accuracy is guarantee within an adjustment range from 30% to 100%.

1.2 AMSA Series

AMSA is the AMS version with **self-venting pump head**.
Self-venting pump head must be used when using chemicals that produce gas (i.e. hydrogen peroxide, ammonium, sodium hypoclorite at particular conditions).
For connections **"Self-Venting pump head installation".**

1.3 AMS AC Series

AMS AC is the AMS version with **double supply: compressed air and power supply.** Compressed air without lubrifiant and/or condensed water. Air supply pressure range must be from 6 to 10 bar.
For connections p. 9.

1.4 Models

Each series is available in different models:

SERIES			MODEL	HOW DOES IT WORK
AMS	AMSA	AMS AC	**CO**	Constant pump with stroke speed (frequency) adjustment
AMS	AMSA	AMS AC	**CL**	Constant pump with level control, stroke speed (frequency) adjustment
AMS	AMSA	-	**IS**	Constant-proportional pump driven by external digital signal with level control: to each external pulse correspond one pump stroke
AMS	AMSA	-	**PV**	Constant-proportional pump driven by external digital signal with pulse divider mode (ratio 1 to 1000) and level control
AMS	AMSA	-	**PVM**	Constant-proportional pump driven by external digital signal, level control , with pulse divider mode (ratio 1 to 100) and multiplier mode (ratio 1 to 10)
AMS	AMSA	-	**IC**	Constant-proportional pump driven by current signal (0/4mA = 0 pulses; 20mA = max pulses) and level control

1.5 Capacity

AMS	
Pressure (bar)	Flow (l/h)
25	5
15	10
10	15
7	20
3	40
2	60

AMSA	
Pressure (bar)	Flow (l/h)
25	3,2
15	6
10	10
7	13

AMS AC	
Pressure (bar)	Flow (l/h)
10	50
5	140
0	220

2. Unpacking

Included into package:

n.4	Dibbles ø6
n.4	Self tapping screws 4,5 x 40
n.1	Delayed fuse 5 X 20
n.1	Level probe with axial foot filter (PVDF) - not present in "CO" models
n.1	Injection valve
m 2	Delivery pipe (PVDF)
m 2	Suction pipe (transparent PVC)
m 2	Venting pipe (transparent PVC)
n.1	This installation manual

* If hose is 6x8 there is only a 4 meters long hose.
Cut to obtain suction and delivery hoses.

Remove the contents from the box.

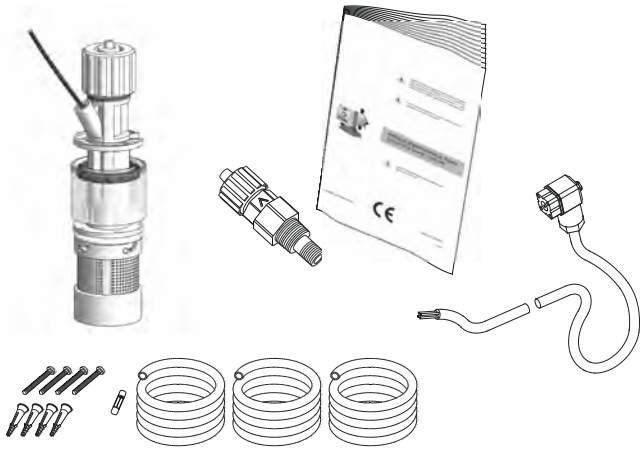

PLEASE DO NOT TRASH PACKAGING.
IT CAN BE USED TO RETURN THE PUMP.

Fig. 3. AMS - AMSA dosing pumps

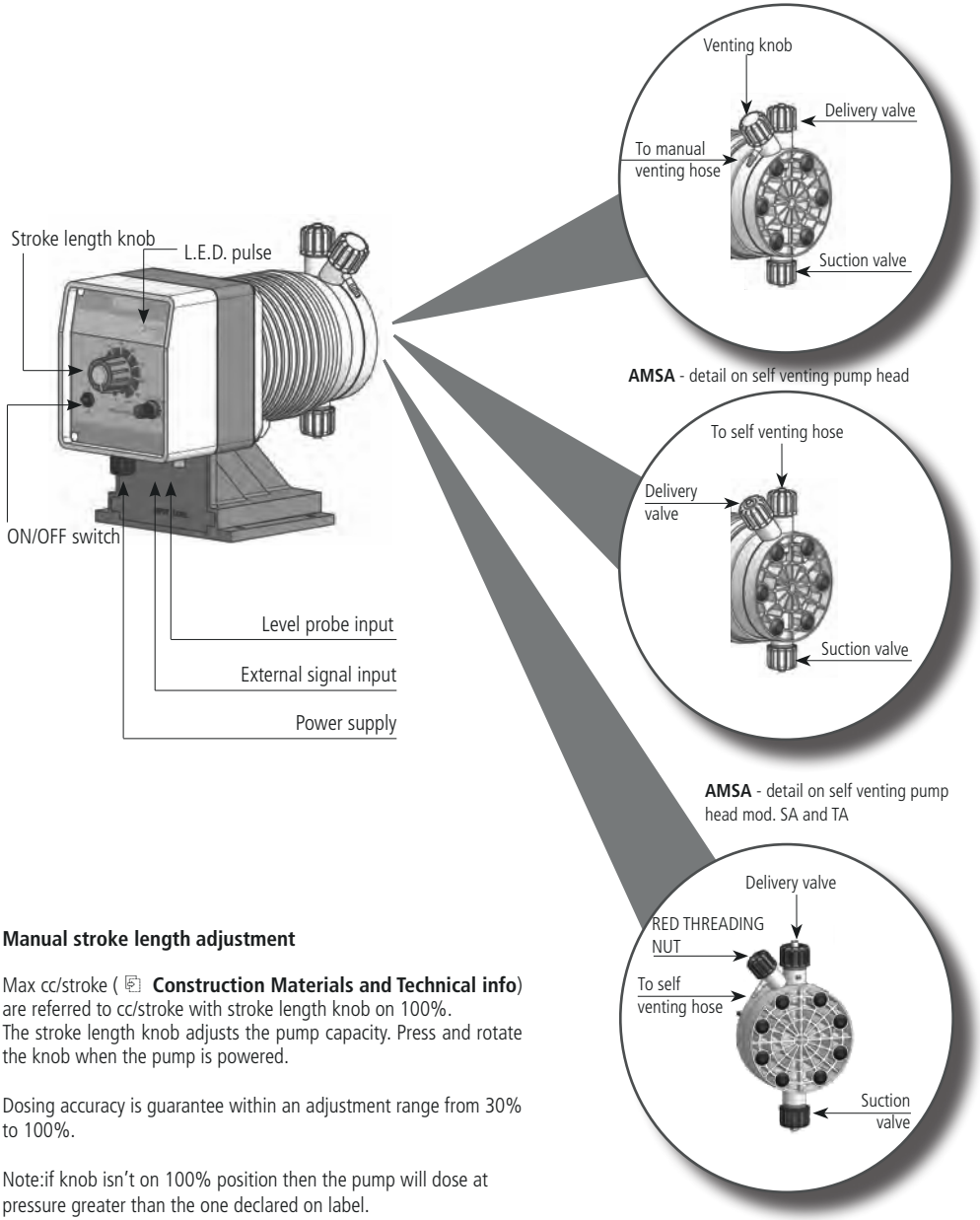

Manual stroke length adjustment

Max cc/stroke (**Construction Materials and Technical info**) are referred to cc/stroke with stroke length knob on 100%.
The stroke length knob adjusts the pump capacity. Press and rotate the knob when the pump is powered.

Dosing accuracy is guarantee within an adjustment range from 30% to 100%.

Note:if knob isn't on 100% position then the pump will dose at pressure greater than the one declared on label.

Compressed air supply

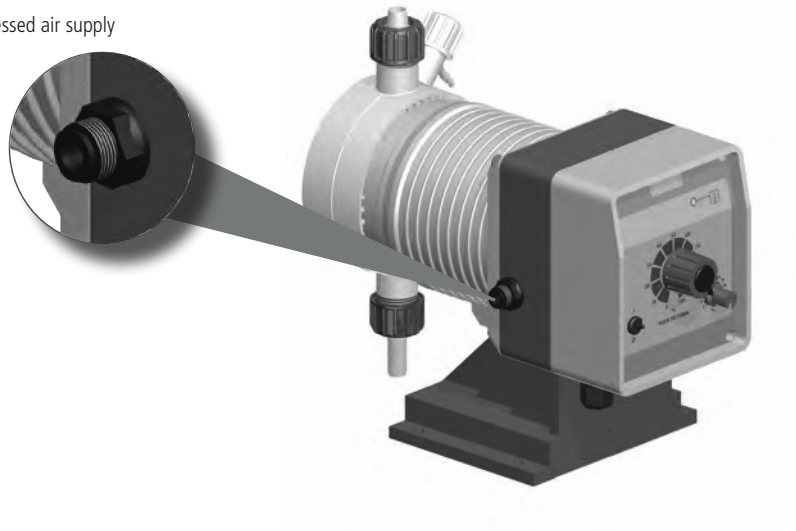

Compressed air valve silencer

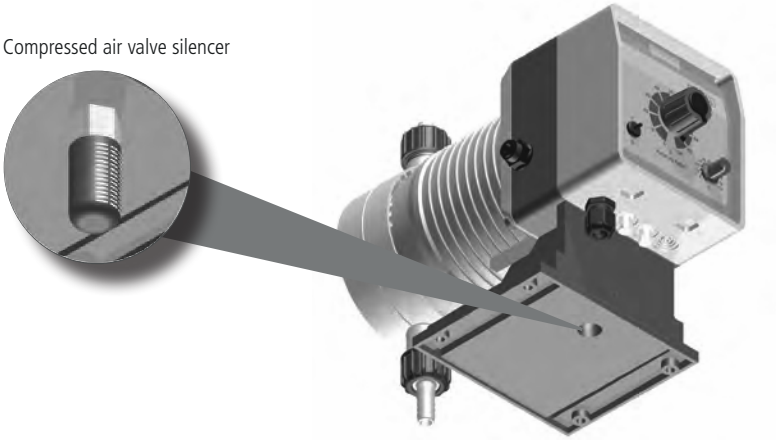

Compressed air without lubrifiant and/or condensed water.
Air supply pressure range must be from 6 to 10 bar.

4. Before to Install warnings

Pump's installation and operativity is made in 4 main steps:

Pump's installation
Hydraulic Installation (hoses, level probe, injection valve)
Electrical Installation (main power connection, priming)
Programming the pump.

Before to start, please read carefully the following safety information.

PROTECTIVE CLOTHES

Wear always protective clothes as masks, gloves, safety glasses, ear plugs or ear muffs, and further security devices during ALL installation procedure and while handling chemicals.

INSTALLATION LOCATION

Pump must be installed in a safety place and fixed to the table / wall to avoid vibration problems!

Pump must be installed in a easy accessible place!

Pump must be installed in horizontal position!

Avoid water splashes and direct sun!

HOSES AND VALVES

Suction and delivery hoses must be installed in vertical position!
All hoses connections must be performed using only hands' force!
No tongs required!

Delivery hose must be firmly fixed to avoid suddenly movements that could damage near objects!

Suction hose must be shorter as possible and installed in vertical position to avoid air bubbles suction!

Use only hoses compatibles with product to dose! See chemical compatibility table. If dosing product is not listed please consult full compatibility table or contact chemical's manufacturer!

Feeder should be interlocked with a NO-FLOW PROTECTION device to automatically shut-off the pumps when there is no flow!

Adequate measures shall be taken to PREVENT CROSS CONNECTION OF CHEMICALS!

Chemical feeding must be STOPPED during backwash cycles and periods of noflow as these conditions may introduce the potential for chemical overdosing. Not doing so may result in elevated chemical concentrations and hazerdous gas introduction into the pool or spa.

5. Installation draw

Pump must be installed in a stable support (for example a table) at a maximum height (**from tank's bottom**) of **1,5 meters**.

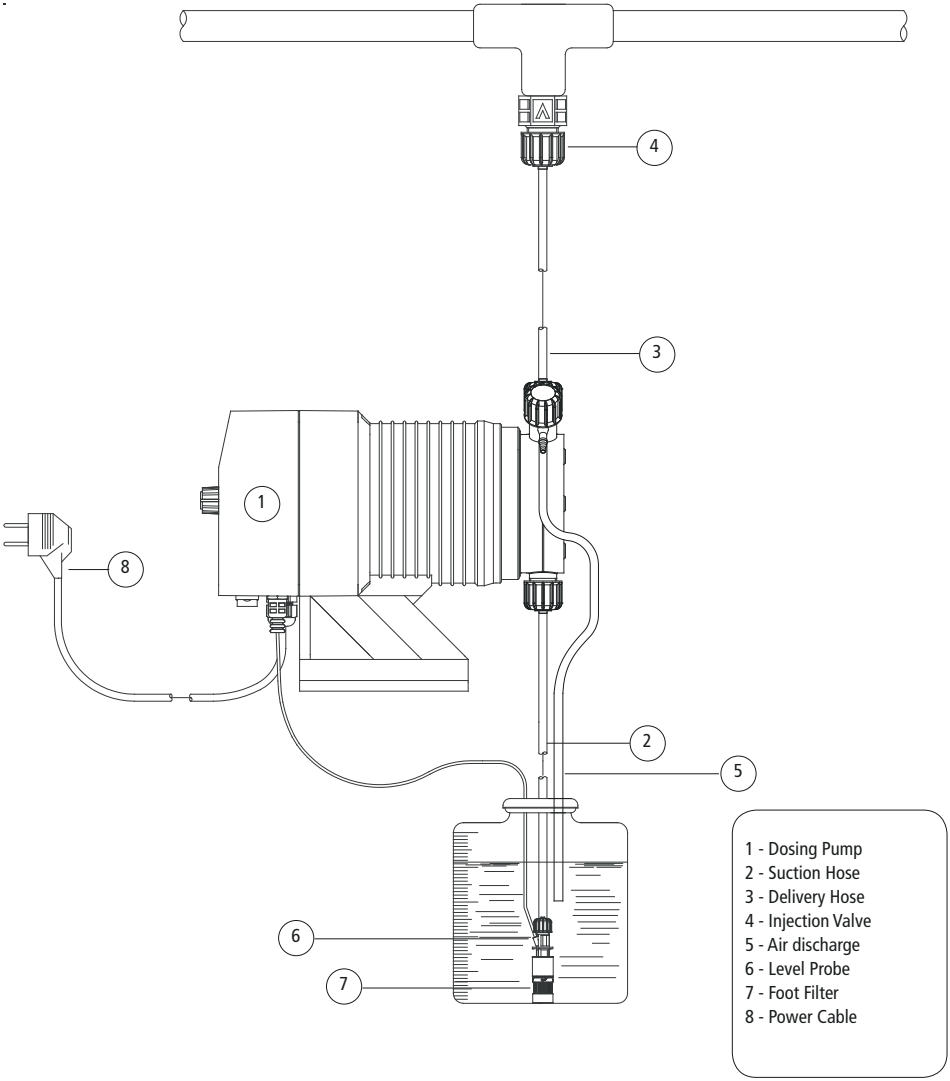

6. Hydraulic installation

Hydraulic connections are:

Suction Hose with level probe and foot filter
Delivery Hose with injection valve
Venting hose

Suction Hose.

Completely unscrew tightening nut from pump's head and remove assembling components: tightening nut, holding ring and pipe holder.

Assembly as shown in fig. (A). Insert hose into pipe holder until it reaches the bottom.

Lock hose on pump's head by screwing down the tightening nut.
Use only hands to do it!

Connect other side of the hose to the foot filter using the same procedure.

fig. (A)

Assembling foot filter with level probe (not present in CO models).

Level probe must be assembled with foot filter using the provided kit.
Foot valve is made to be installed into tank's bottom without sediments priming problem.

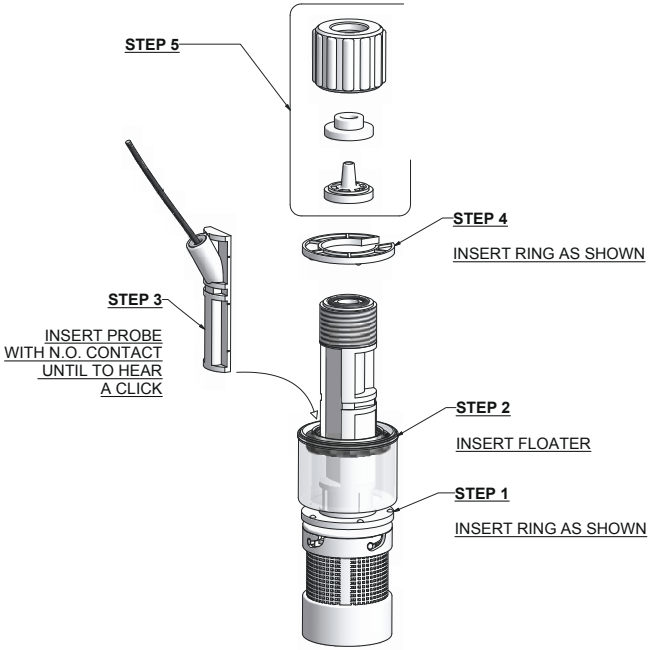

Connect BNC from level probe into pump's level input (front side of the pump).
Put level probe assembled with foot filter into tank's bottom.

Warning: If there is a mixer installed into tank, install a suction lance instead of level probe / foot filter.

Delivery Hose.

Completely unscrew tightening nut from pump's head and remove assembling components: tightening nut, holding ring and pipe holder.

Assembly as shown in fig. (A). Insert hose into pipe holder until it reaches the bottom.

Lock hose on pump's head by screwing down the tightening nut.
Use only hands to do it!

Connect other side of the hose to the injection valve using the same procedure.

Injection Valve.

Injection valve must be installed on plant from water's input.
Injection valve will open at pressure greater than 0,3 bar.

Venting hose.

Insert one side of venting hose into venting connector as shown in fig (C).

Insert other side of venting hose into product's tank.
During priming procedure product exceeding will flow into tank.

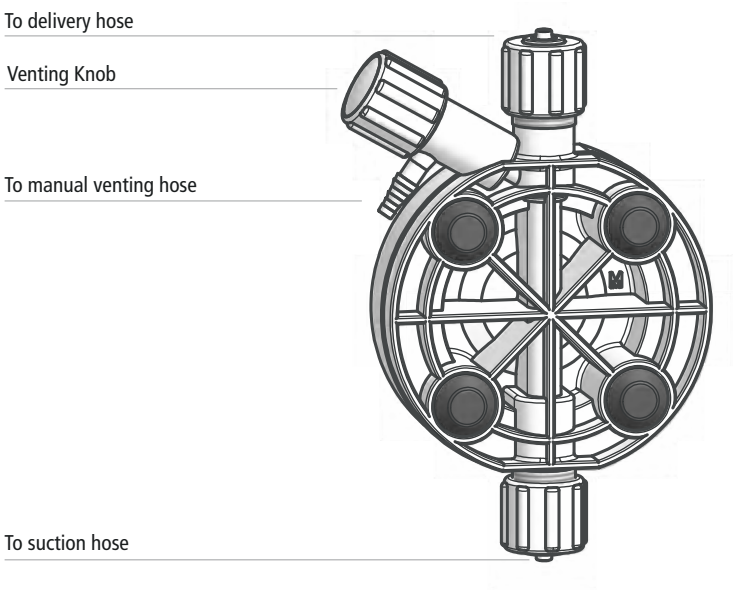

fig. (C)

For priming procedure see **PRIMING**.

it's allowed to lightly bend venting hose.

During calibration procedure ("TEST") insert venting hose into BECKER test-tube.

7. Self-Venting pump head installation

Self-venting pump head must be used when using chemicals that produce gas (i.e. hydrogen peroxide, ammonium, sodium hypoclorite at particular conditions).
Refer to fig. 4-5 for delivery and venting hose.
Hoses assembling procedures are the same described before.

Fig. 4. Self-venting models pump head: LA, MA, NA (AMSA).

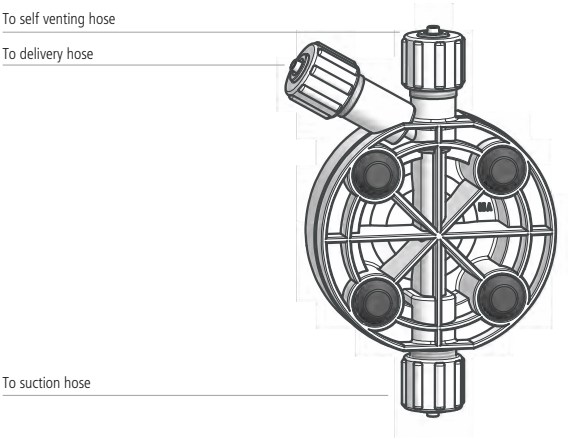

Fig. 5. Self-venting models pump head: SA, TA (AMSA).

ON "SA" AND "TA" MODELS THERE IS A RED THREADING NUT

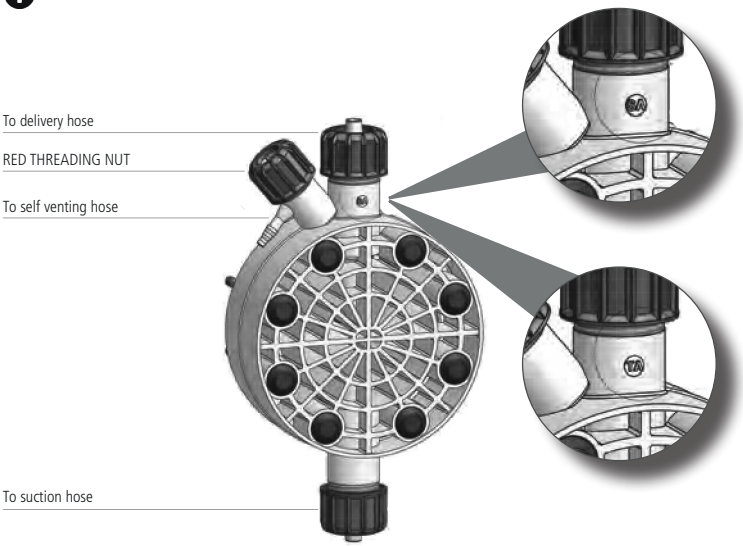

8. Electrical Installation

All electrical connections must be performed by **AUTHORIZED AND QUALIFIED** personnel only.
Before to proceed, please, verify the following steps:

- verify that pump's label values are compatible with main power supply.

- pump must be connected to a plant with a differential switch (0,03A sensitivity) if there isn't a good ground.

- to avoid damages to the pump do not install it in parallel with heavy inductance load (for example: engines). A relay switch must be used. See below picture.

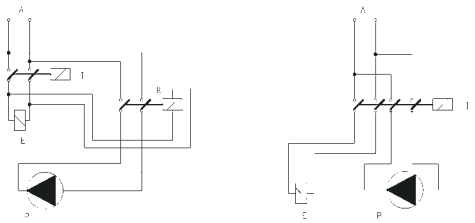

P - Dosing Pump
R - Relay
I - Switch or safety device
E - Electrovalve or inductance load
A - Main Power

- On pump's mother board there is a further protection against over voltages (275V - 150V) and distribution line noises (4KV for max 50µsec) as shown:

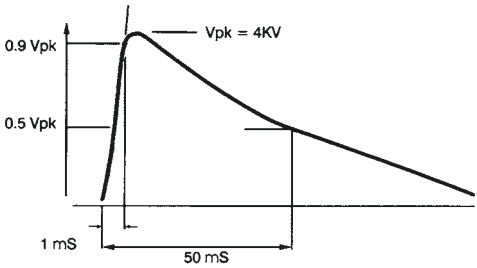

Once verified previous steps proceed as follows:

- check that "BNC" of level probe has been connected as described in "Hydraulic Installation" chapter.

- connect "BNC" and external signal to pump's "INPUT" connectors.

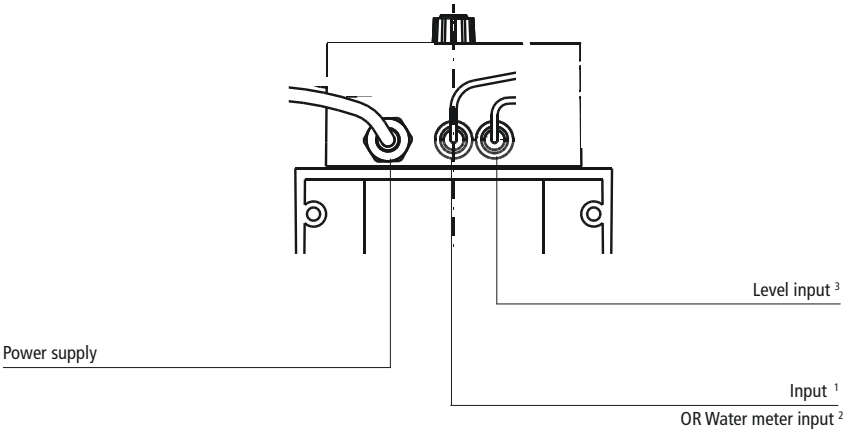

[1] Only for AMS IC; AMS IS model.
[2] Only for AMS PV; AMS PVM model.
[3] Not available for AMS CO model.

WARNING
IF EQUIPMENT IS SUPPLIED WITH A PLUG:

If an appliance coupler or separable plug is used as the disconnecting device, it shall be readily identifiable and easily reached by the operator. For single-phase portable equipment, a plug on a cord of length not greater than 3m is considered to be easily reached.

WARNING
IF EQUIPMENT IS NOT SUPPLIED WITH A PLUG:

a) a switch or circuit-breaker shall be included in the building installation
b) it shall be in close proximity to the equipment and within easy reach of the operator
c) it shall be marked as the disconnetting device for the equipment

9. Level alarm - Models

LEVEL ALARM

CL, IS, IC, PV and TE type pump are provided with a liquid level alarm to indicate if product tank is empty. The level probe is connected to the right BNC plug on pump's bottom panel. The level probe is made of a N.O. reed contact (10VA, 1A max, 230Vac max) closed by a floating magnet housed in a (PP) plastic box. When the product level goes below the minimum the magnet closes the reed contact. The pump stops and the red LED on pump's front panel indicates the alarm status.

PUMP TYPES

"AMS Analog" series pump capacity can be reduced 10 or 100 times operating the 1/10/100 switch in the frontal panel, the % marked knob will act on this set capacity.

AMS CO

Constant dosing pump with stroke speed adjustment between 0 and 100% of indicated capacity (see label on pump type). The % marked knob sets the pump capacity, changing linearly the magnet stroke number per minute. It is strongly suggested to not operate the pump in the range from 0 to 10%, since there is not a linear correlation with the pump stroke speed in that range. This pump is specially designed for constant dosing rates. AMS CO pump can be ON/OFF driven by a LPH or a LCD instrument. To set 2 l/h against 10 bar on a AMS CO 1004 the % marked knob should be set to 50%.

AMS CL

Constant dosing pump with level alarm, provided with a floating magnetic sensor probe. A red led indicates that the pump stops dosing because the product tank is empty. This pump has the same features and adjustments of the CO type pump.

AMS IC

Proportional/constant pump driven by current signal. Setting the switch on the constant ⎍ position, the pump has the same features and adjustments of the CL pump. Setting the switch on the proportional
⎍ position, the pump capacity is set proportionally to a given analog current signal; a given linear change of the signal will be followed by a linear change of capacity.
The current signal accepted range is 0-20 mA (it can be changed upon demand). The maximum pump capacity requested by the maximum input signal is set by the % marked knob. The IC pump can be driven by any electronic device (such as pH-meter, RH-meter, etc) that gives an analog current signal output. This signal must be applied to the bipolar cable provided with the pump, already internal connected, being care to connections: red wire: positive (+); black wire: negative (-).

AMS IS

Proportional/constant pump driven by a digital signal. Setting the switch on the constant position, the pump has the same features and adjustments of the CL pump. Setting the switch on the proportional position, to each external voltage free pulse correspond a magnet stroke. When proportional position is set, the % marked knob does NOT affect the pump capacity. The IS proportional dosing pump can be driven by any external device (PCs, PLCs, etc.) that produce a digital signal. The digital signal (N.O. contact) must be applied to the cable provided with the pump, already internal connected. If it is requested a 0-5; 0-12 Vdc input signal option, be care to connections: red wire: positive (+); black wire: negative (-).

AMS PV

Proportional/constant pump driven by a water meter digital signal. Setting the switch on the constant position, the pump has the same features and adjustments of the CL pump. It is furthermore possible to divide the maximum magnet strokes per minute by 1, 10 and 100 using the switch on the front panel. Setting the switch on the proportional position, to each external pulse correspond one pump stroke. This pump can be driven by a CTFI or CWFI series water meters. This pump can also be driven by a digital signal coming from a voltage free contact. Driving signal is applied on the BNC plug on the left bottom of the front cover. Dividing factor (N) value is obtained multiplying the value indicated on the adjustment knob by the multiplying switch (x1, x10, x100) value.

Capacity definition for "AMS PV" pump

Given the water m^3 to be treated and the product amount to dose in p.p.m., the minimum pump capacity to be used can be obtained with the following formula:

$$\frac{ppm \times m^3}{1000 \times K} = l/h$$

l/h - minimum pump capacity required
ppm - product amount to dose in p.p.m. (gr/m^3)
k - dosed product dilution factor (pure chemical k=1)
m^3 - maximum capacity of the system to be treated in m^3 /h.

Dividing factor (N) to be set on the adjustment knob is given by the following formula:

$$\left(\frac{imp/l \times cc}{ppm \times K}\right) \times 1000 = N$$

N - is the number the external pulses are divided by to be set on the adjustment knob
imp/l- pulse per liter given by the water meter
cc - pump's single stroke dosing quantity (in cc). Refer to following table
k - dosed product dilution factor (pure chemical k=1)
ppm* - product amount to dose in p.p.m. (gr/m^3)
* 10.000 ppm equals to 1%

Pump model	cc max	Piston displacement
AMS PV 2505	0,70	100%
AMS PV 1510	1,4	100%
AMS PV 1015	2,08	100%
AMS PV 0720	2,8	100%
AMS PV 0340	5,6	100%
AMS PV 0260	7,7	100%

If the dividing factor (N), obtained with the above formula, is <1, a pump with higher single stroke dosing quantity is required or the water meter needs to be changed with one that gives higher number of pulses per liter. In some application this issue can be solved reducing the dosed product dilution factor. If dosed amount is higher than the needed one, the set dividing factor (N) can be increased.

AMS PVM

Proportional/*constant* pump driven by a water meter digital signal.
Setting the switch on the *constant* position, the pump has stroke speed adjustment between 0 and 100% of indicated capacity (see label on pump type). The % marked knob sets the pump capacity, changing linearly the magnet stroke number per minute. It is strongly suggested to not operate the pump in the range from 0 to 10%, since there is not a linear correlation with the pump stroke speed in that range. It is furthermore possible to divide the maximum magnet strokes per minute by 1 (-1), 10 (-10) and 100 (-100) using the switch on the front panel. The electronic capacity adjustment sets the injection per minute.

If the pump is set to Proportional mode, you only use the settings labelled in the colour of the water meter symbol on the face of the pump.

Set the selector switch to x1, /1 or /10.

In Proportional mode, the Stroke Frequency adjustment knob becomes a Factor Setting, eg 1, 2, 3 etc.

This factor is used to multiply or divide the pulses.
For instance, if the selector switch is set to x1, and the Factor Setting is set to 5, the pump will stroke 5 times for every pulse received.
Conversely, if the selector switch is set to /1, and the Factor Setting is set to 4, say, the pump will only give 1 stroke very 4 pulses received.

This pump can be driven by a CTFI or CWFI series water meters. This pump can also be driven by a digital signal coming from a voltage free contact. Driving signal is applied on the BNC plug on the left of the bottom pump cover.

10. Priming

PRIMING

To prime the pump without touching chemicals please do as follow:

- connect all hoses into proper places (delivery hose, suction hose, outgassing hose).
- open outgassing valve and turn on the pump.
- set pump's single injection at 100% and pulses at 50%.

All air inside the pump head will exit through the outgassing outlet. When product will leak from it, close immediately the outgassing valve. If dosing product is particularly dense, to facilitate the priming, insert on vent pipe a syringe of 20 cc and suck inside.

11. Troubleshooting

Problem	Possible Cause
Pump doesn't turn on.	Pump isn't powered. Connect it to main supply. Pump's protection fuse is broken. Replace it. See page 19 for replacement procedure. Pump's main board is broken. Replace it. See page 19 for replacement procedure.
Pump is not dosing and solenoid is operating.	The foot filter is obstructed. Clean it. Suction hose is empty. Pump must be primed. Repeat priming procedure. Air bubbles inside hydraulic circuit. Check valves - hoses - fittings. Product to dose is generating gas. Turn venting knob and let air flow away. Use a self-venting pump head.
Pump is not dosing and solenoid isn't operating or slightly operating.	Crystals presence inside valves. Check them and try to dose 2-3 liters of normal water. Change valves. Injection valve obstructed. Change it.

12. Fuse and main board replacement

Fuse or main board replacement is allowed to qualified personnel only. Before to operate disconnect the pump from main power and all hydraulic connections.

For fuse replacement is necessary to use a 3x16 and 3x15 screwdriver and a new fuse (same model of old one).

For main board replacement is necessary to use a 3x16 and 3x15 screwdriver and a new main board (same model of old one).

- Turn pump's injection knob on 0%.

- Remove 6 screws from pump's back.

- Pull pump's back cover until it's completed separated from pump's front. Be careful of the knob's spring.

- Locate the blown fuse and replace it.

- Reassemble the pump. Be careful to put back the knob's spring.

- Reinsert screws.

- Turn pump's injection knob on 0%.

- Remove 6 screws from pump's back.

- Pull pump's back cover until it's completed separated from pump's front. Be careful of the knob's spring.

- Remove board's screws.

- Completely disconnect wires from main board and replace it. Reinsert screws.

- Reconnect wires to the main board (see enclosed picture).

- Reassemble the pump. Be careful to put back the knob's spring.

- Reinsert screws.

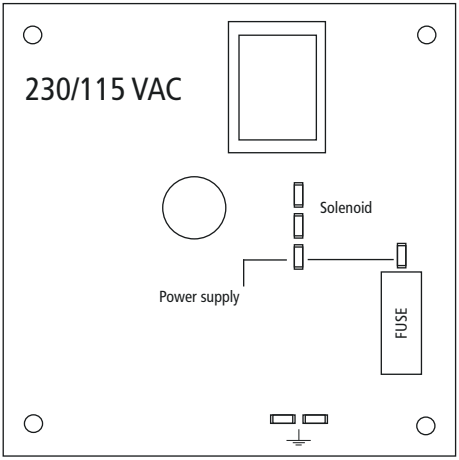

"CO" Power Circuit Board

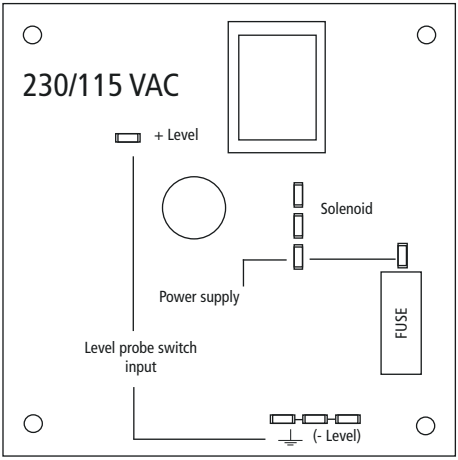

"CL" Power Circuit Board

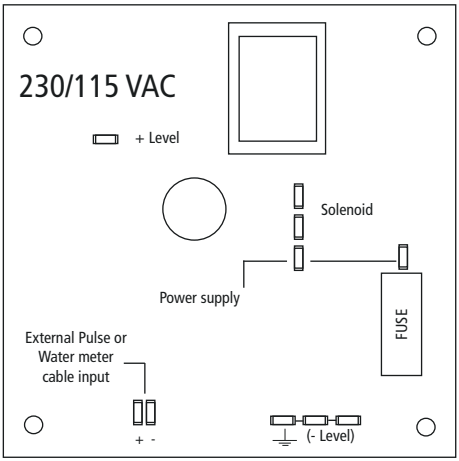

"IS/IC" Power Circuit Board

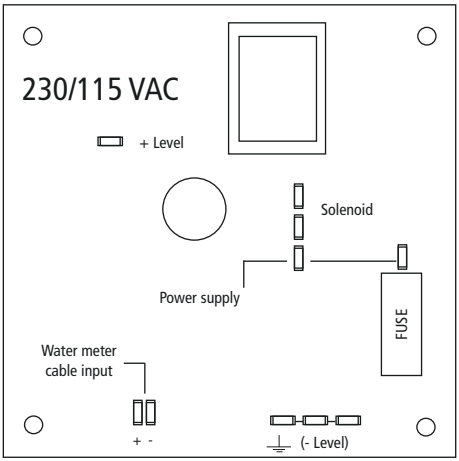

"PV" Power Circuit Board

Maintenance schedule

In order to ensure the requirements of potable drinking water treated and the maintenance of the improvements as declared by the manufacturer, this equipment must be checked at least once a month.

OPERATOR PROTECTION
Use safety equipment according to the company regulations.
Use this safety equipment within the work area during installation, service and when handling chemicals:
- **protective mask**
- **protective gloves**
- **safety goggles**
- **ear plugs or hear muffs**
- **further security device, if necessary.**

POWER SUPPLY DISCONNECTION
Always disconnect power to the motor before you perform any installation or maintenance tasks. Failure to disconnect power will result in serious physical injury.

Installation and maintenance tasks should be carried out by AUTHORIZED AND QUALIFIED PERSONNEL only in accordance with local regulations.

Use original spare parts.

Maintenance inspection

Shutdown the dosing pump before any maintenance operation **Shutdown procedure.**

A maintenance schedule includes these types of inspections:
- Routine maintenance and inspections
- Three-month inspections
- Annual inspections

Shorten the inspection intervals appropriately if the pumped chemical is abrasive or corrosive.

Routine maitenance and inspections
Perform these tasks whenever you perform routine maintenance:
- Inspect the seal. Ensure that there are no leaks from the mechanical seal.
- Check electrical wiring
- Check for unusual noise and vibration (noise allowed 71 dbA; ± 5 dB).
- Check the pump and piping for leaks.
- Check for corrosion on parts of the pump and / or on hoses.

Three-month inspections
Perform these tasks every three months:
- Check that the tightenings.
- Check the mechanical seal if the pump has been left idle.

Annual inspections
Perform these inspections one time each year:
- Check the pump capacity (as per nameplate).
- Check the pump pressure (as per nameplate).
- Check the pump power (as per nameplate).

f the pump performance does not satisfy your process requirements, and the process requirements have not changed, then perform these steps:
1. Disassemble the pump.
2. Inspect it.
3. Replace worn parts.

Shutdown procedure

This procedure SHOULD BE CARRIED OUT BY AUTHORIZED AND QUALIFIED PERSONNEL

OPERATOR PROTECTION
Use safety equipment according to the company regulations.
Use this safety equipment within the work area during installation, service and when handling chemicals:
- **protective mask**
- **protective gloves**
- **safety goggles**
- **ear plugs or hear muffs**
- **further security device, if necessary.**

Shutdown the dosing pump **before any maintenance operation** or **before long downtimes**. Disconnect power and ensure it cannot be restarted.

Depressurize the system. The liquid may leak splashing.

Drain the chemical from pump head.
Release the pressure and disconnect the disharge pipe from the discharge valve.
Rinse the pump head and clean all valves.

POWER SUPPLY	FREQ.	FUSE
230 VAC (180-270 VAC)	50/60 Hz	1,25 A
115 VAC (90-135 VAC)	50/60 Hz	1,6 A
24 VAC (20-32 VAC)	50/60 Hz	6,3 A
12 VDC (10-16 VDC)		5 A

Injection/min	0 - 120 (except for 0260:130 injection/min)
Max suction height	1,5 m
Environment temperature:	0 - 45°C (32 - 113°F)
Chemical temperature:	0 - 50°C (32 - 122°F)
Transportation and storage temperature:	-10 - 50°C (14 - 122°F)
Altitude	2000 m
Installation Class:	II
Pollution level:	2
Audible noise:	AMS/AMSA: 57.4 db(A); AMS/AMSA silenced: 54.4 db(A); AMS/AMSA ultra silenced: 53.4 db(A); AMS AC: 78.3 db(A)
Protection degree:	AMS / AMSA / AMS AC: IP 65

For AMS AC mod. (AMS AC CO e AMS AC CL):

Compressed air suction	30 l/h (suction air)
Suction air pressure	7 bar

Compressed air pumps work only with compressed air without lubrificant and/or condensed water. Air supply pressure range must be from 6 to 10 bar.

INFORMATION														
Models AMS	Flow				cc per stroke		stroke/ min	Pressure		Ampere peak (A)		PVDF Delivery hose	Suction Hose	Pump head
	min cc/h	max l/h	Min GPH	Max GPH	min	max		bar	PSI	230 VAC	115 VAC			
2505	150	5	0,039	1.32	0,21	0.70	120	25	362	2.5	2.5	4 x 6	4x 6	L
1510	300	10	0,079	2.64	0,42	1.4	120	15	217	2.5	2.5	4 x 6	4 x 6	M
1015	450	15	0,118	3.96	0.62	2.08	120	10	217	2.5	2.5	6 x 8	6 x 8	M
0720	600	20	0,158	5.28	0,83	2.8	120	7	101	2.5	2.5	6 x 8	6 x 8	N
0340	1200	40	0,317	10.56	1,67	5.6	120	3	43	2.5	2.5	8 x 10	8 x 12	S
0260	1800	60	0,475	15.85	2,31	7,7	120	2	29	2.5	2.5	8 x 10	8 x 12	T
Models AMSA	Flow				cc per stroke		stroke/ min	Pressure		Ampere peak (A)		PVDF Delivery hose	Suction Hose	Pump head
	min cc/h	max l/h	Min GPH	Max GPH	min	max		bar	PSI	230 VAC	115 VAC			
253.2	96	3.2	0,025	0.85	0.13	0.44	120	25	362	2.5	2.5	4 x 6	4x 8	LA
1506	180	6	0,047	1.59	0.25	0.83	120	15	217	2.5	2.5	4 x 6	4 x 8	MA
1010	300	10	0,079	2.64	0.48	1.39	120	10	217	2.5	2.5	6 x 8	6 x 8	MA
0713	390	13	0,103	3.43	0.54	1.80	120	7	101	2.5	2.5	6 x 8	6 x 8	NA

INFORMATION											
Models AMS AC	FLOW				cc per STROKE		Pressure		Delivery hose (PVDF)	Suction hose	Pump Head
	min cc/h	max l/h	Min GPH	Max GPH	min	max	bar	PSI			
1050	1500	50	0,3963	13,21	2,08	6,94	10	145	8 x 10	8 x 12	N
05140	4200	140	1,11	36,97	5,83	19,44	5	72,5	13 x 16	12 x 18	T
00220	6600	220	1,74	58,1	9,2	30,56	0	0	13 x 16	12 x 18	T

Materials

✓ : standard
✗: options available

	PVDF	PP	PPV0	PMMA	PVC	PE	CE	VETRO	PTFE	SS	FKM B	EPDM	WAX	SI
BOX		✓	✗											
PUMP HEAD	✓			✗										
DIAPHRAGM									✓					
BALLS							✓	✗	✗	✗				
SUCTION HOSE	✗				✓	✗								
DELIVERY HOSE	✓				✗	✗								
Venting hose	✗				✓	✗								
O RING									✗		✗	✗	✗	✗
LEVEL PROBE/ FOOT FILTER	✓													
LEVEL RPOBE CABLE						✓								

Pump head L

25 - 05

l/h 05

bar 25

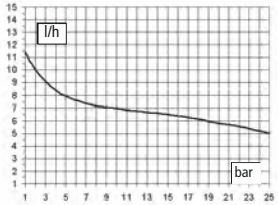

Pump head M

15 - 10

l/h 10

bar 15

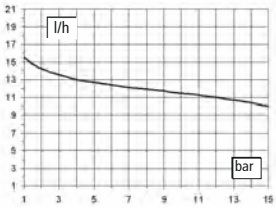

Pump head M

10 - 15

l/h 15

bar 10

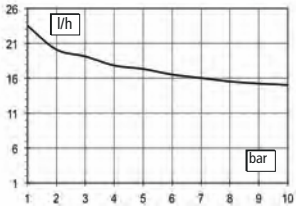

Pump head N

07 - 20

l/h 20

bar 07

Pump head S

03 - 40

l/h 40

bar 03

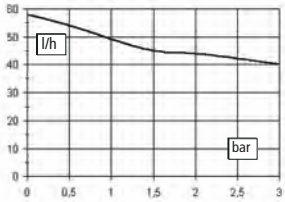

Pump head T

02 - 60

l/h 60

bar 02

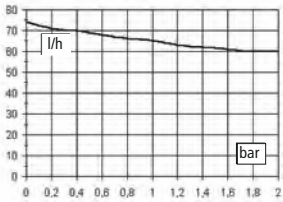

Flow rate indicated is for H_2O at 20°C at the rated pressure. Dosing accuracy ± 2% at constant pressure ± 0,5 bar.

C Appendix. Delivery Curves for self-purge pump head

Pump head LA

25 - 3,2

l/h 2,3

bar 25

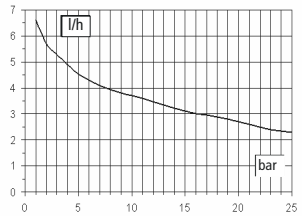

Pump head MA

15 - 06

l/h 06

bar 15

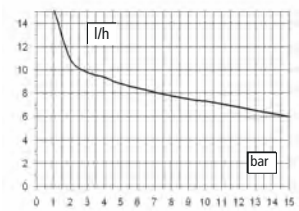

Pump head NA

07- 13

l/h 13

bar 07

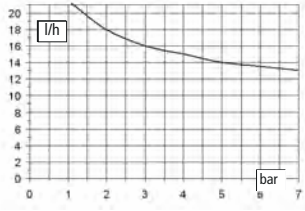

Flow rate indicated is for H_2O at 20°C at the rated pressure. Dosing accuracy ± 2% at constant pressure ± 0,5 bar.

C Appendix. Delivery Curves for compressed air models

T pump head

05 140

L/h 140

bar 5

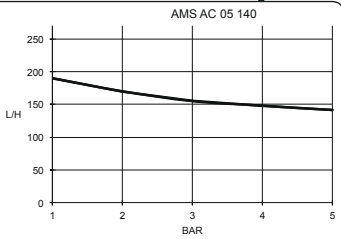

T pump head

00 220

L/h 220

bar 0

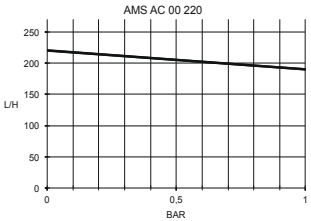

N pump head

10 50

L/h 50

bar 10

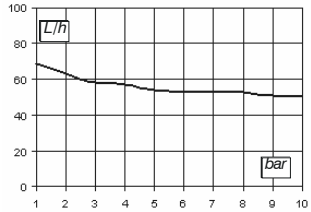

Pump head "N" - "P"

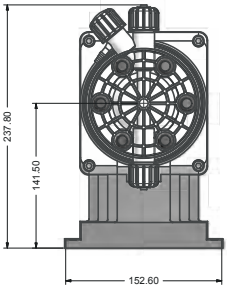

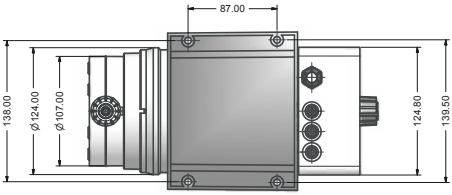

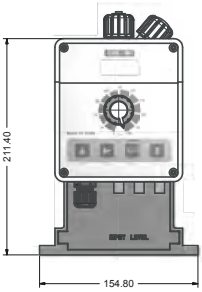

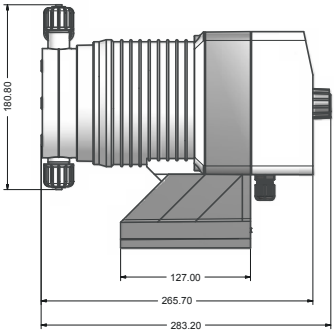

Pump head "S" - "T"

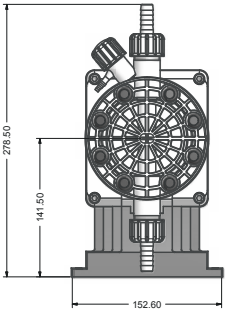

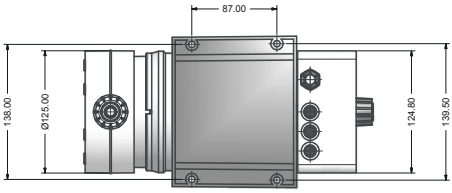

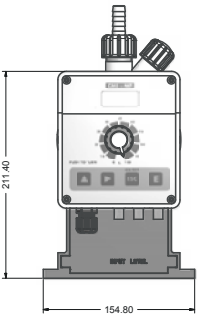

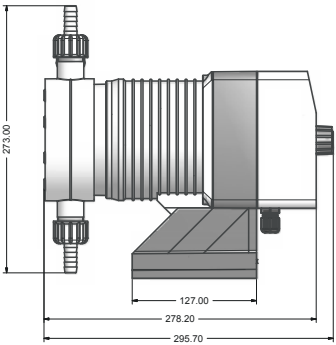

E Appendix. Chemical Compatibility Table

Solenoid driven metering pumps are widely used to dose chemical fluids and it is important that the most suitable material in contact with fluid is selected for each application. This compatibility table serves as a useful help in this respect. All the informations in this list are verified periodically and believed to be correct on the date of issuance. All the informations in this list are based on manufacturer's data and its own experience but since the resistance of any material depends by several factors this list is supplied only as an initial guide, in no way manufacturer makes warranties of any matter respect to the informations provided in this list.

Product	Formula	Ceram.	PVDF	PP	PVC	SS 316	PMMA	Hastel.	PTFE	FPM	EPDM	NBR	PE
Acetic Acid, Max 75%	CH3COOH	2	1	1	1	1	3	1	1	3	1	3	1
Hydrochloric Acid, Concentrate	HCl	1	1	1	1	3	1	1	1	1	3	3	1
Hydrofluoric Acid 40%	H2F2	3	1	3	2	3	3	2	1	1	3	3	1
Phosphoric Acid, 50%	H3PO4	1	1	1	1	2	1	1	1	1	1	3	1
Nitric Acid, 65%	HNO3	1	1	2	3	2	3	1	1	1	3	3	2
Sulphuric Acid, 85%	H2SO4	1	1	1	1	2	3	1	1	1	3	3	1
Sulphuric Acid, 98.5%	H2SO4	1	1	3	3	3	3	1	1	1	3	3	3
Amines	R-NH2	1	2	1	3	1	-	1	1	3	3	1	1
Sodium Bisulphite	NaHSO3	1	1	1	1	2	1	1	1	1	1	1	1
Sodium Carbonate (Soda)	Na2CO3	2	1	1	1	1	1	1	1	2	1	1	1
Ferric Chloride	FeCl3	1	1	1	1	3	1	1	1	1	1	1	1
Calcium Hydroxide (Slaked Lime)	Ca(OH)2	1	1	1	1	1	1	1	1	1	1	1	1
Sodium Hydroxide (Caustic Soda)	NaOH	2	3	1	1	1	1	1	1	2	1	2	1
[1] Calcium Hypochlor.(Chlor.ted Lime)	Ca(OCl)2	1	1	1	1	3	1	1	1	1	1	3	1
Sodium Hypochlorite, 12.5%	NaOCl + NaCl	1	1	2	1	3	1	1	1	1	1	2	3
Potassium Permanganate, 10%	KMnO4	1	1	1	1	1	1	1	1	1	1	3	1
Hydrogen Peroxide, 30% (Perydrol)	H2O2	1	1	1	1	1	3	1	1	1	3	3	1
Aluminium Sulphate	Al2(SO4)3	1	1	1	1	1	1	1	1	1	1	1	1
Copper-II-Sulphate (Roman Vitriol)	CuSO4	1	1	1	1	1	1	1	1	1	1	1	1

[1] Calcium Hypochlor.(Chlor.ted Lime): WQA test was based on 1% Calcium Hypochlorite solution.

Resistance rating

Resistant	1
Fairly resistant	2
Not resistant	3

MATERIALS

Polyvinyldene fluoride	PVDF	Pump Heads, valves, fitting, tubing
Polypropylene	PP	Pump Heads, valves, fitting, level floater
PVC	PVC	Pump Heads
Stainless steel	SS 316	Pump Heads, valves
Polymethyl Metacr.(Acrylic)	PMMA	Pump Heads
Hastelloy	C-276	Injection valve spring
Polytetrafluoroethylene	PTFE	Diaphragm
Fluoroelastomer B (FKM B)	FPM	Sealings
Ethylene propylene	EPDM	Sealings
Nitrile	NBR	Sealings
Polyethylene	PE	Tubing

F Appendix. Hoses resistance table

Hose features are very important for a reliable dosage. Every pump's model is made to work in the best way using selected hoses according to pump's capacity / model. Information reported here are intended for standard use only. For extended information ask to hose's manufacturer.

Suction / Delivery Hose			
4x6 mm PVC (transparent)	4x8 mm PE (opaque)	6x8 mm PE (opaque)	8x12 mm PVC (transparent)

Delivery Hose	Working Pressure				Breaking Pressure			
4x6 mm PE 230 (opaque)	20°C 12 bar	30°C 10.5 bar	40°C 8.5 bar	50°C 6.2 bar	20°C 36 bar	30°C 31.5 bar	40°C 25.5 bar	50°C 18.5 bar
4x8 mm PE 230 (opaque)	20°C 19 bar	30°C 15.7 bar	40°C 12 bar	50°C 7.5 bar	20°C 57 bar	30°C 47 bar	40°C 36 bar	50°C 22.5 bar
6x8 mm PE 230 (opaque)	20°C 8.6 bar	30°C 6.8 bar	40°C 4.8 bar	50°C 2.3 bar	20°C 26 bar	30°C 20.5 bar	40°C 14.5 bar	50°C 7 bar
8x12 mm PE 230 (opaque)	20°C 12 bar	30°C 10.5 bar	40°C 8.5 bar	50°C 6.2 bar	20°C 36 bar	30°C 31.5 bar	40°C 25.5 bar	50°C 18.5 bar

4x6 mm PVDF Flex 2800 (opaque)	20°C 40 bar	30°C 34 bar	40°C 30 bar	50°C 27 bar	60°C 24.8 bar	80°C 20 bar	90°C 10 bar
6x8 mm PVDF Flex 2800 (opaque)	20°C 29 bar	30°C 25.5 bar	40°C 22 bar	50°C 20 bar	60°C 18 bar	80°C 14.5 bar	90°C 7.3 bar
8X10 mm PVDF Flex 2800 (opaque)	20°C 18 bar	30°C 15.5 bar	40°C 13.5 bar	50°C 12.5 bar	60°C 11.2 bar	80°C 9 bar	90°C 4.5 bar

¼ PE 230 (opaque)	20°C 17.6 bar
⅜ PE 230 (opaque)	20°C 10.6 bar
½ PE 230 (opaque)	20°C 10.6 bar

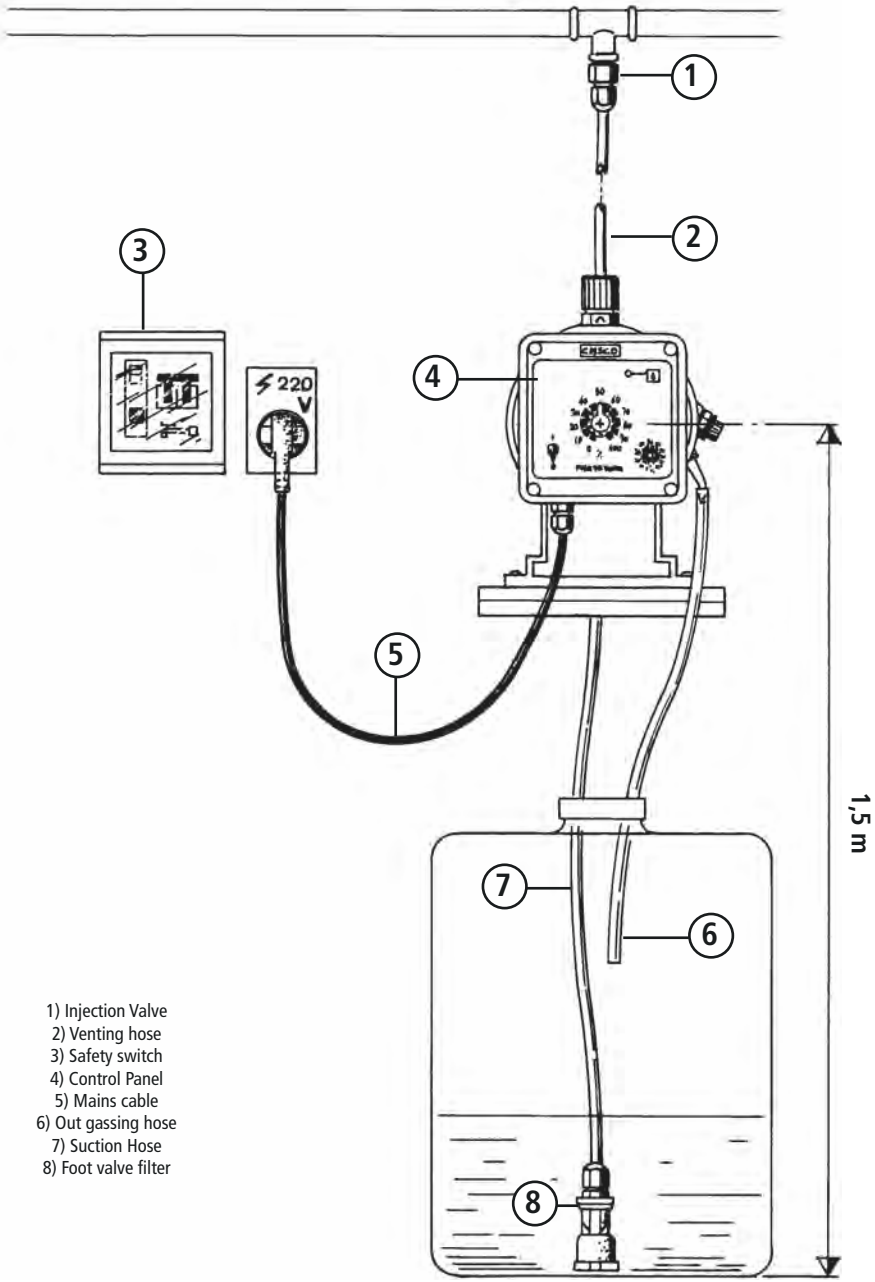

1) Injection Valve
2) Venting hose
3) Safety switch
4) Control Panel
5) Mains cable
6) Out gassing hose
7) Suction Hose
8) Foot valve filter

H Appendix. Installation draw for AMS CL

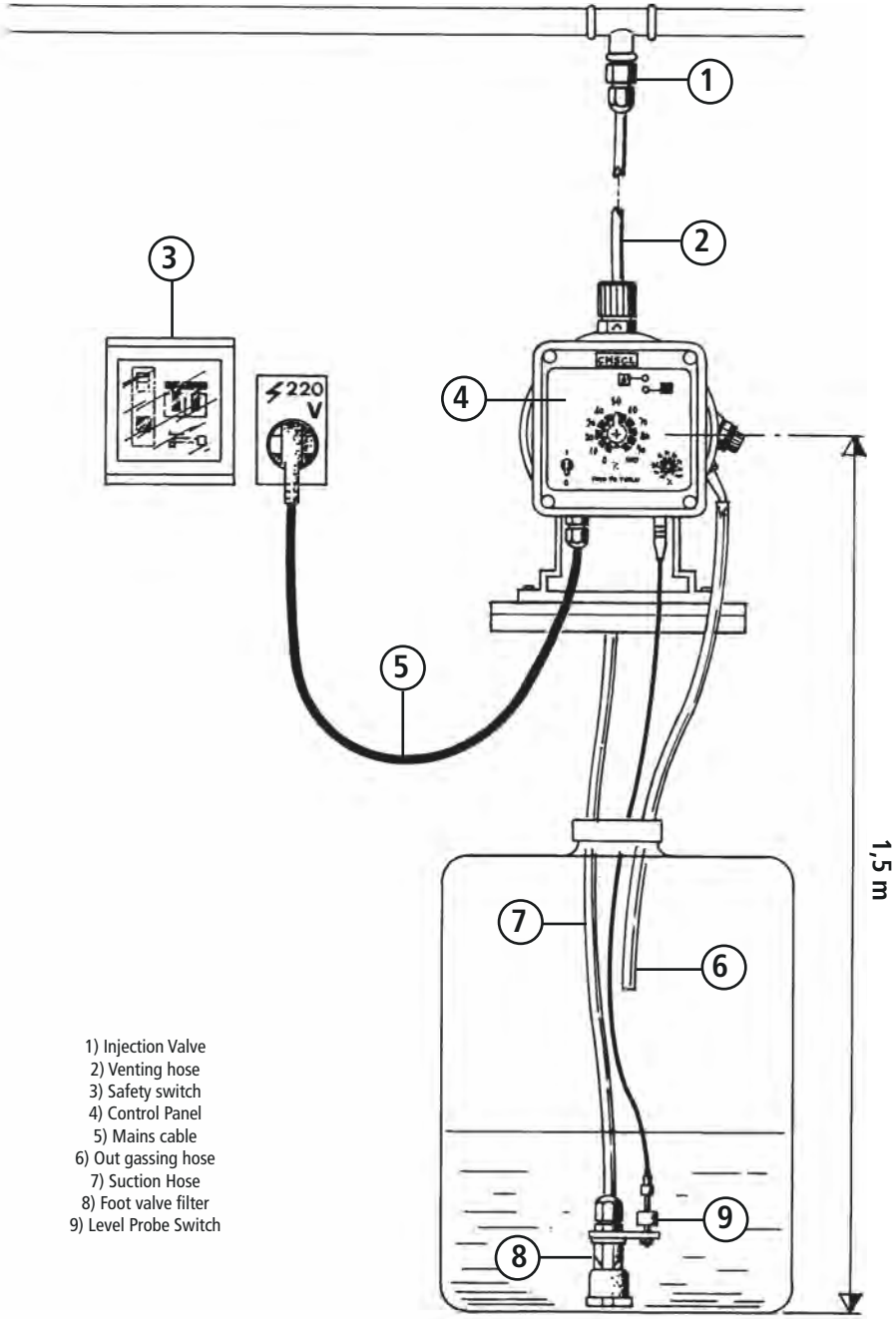

1) Injection Valve
2) Venting hose
3) Safety switch
4) Control Panel
5) Mains cable
6) Out gassing hose
7) Suction Hose
8) Foot valve filter
9) Level Probe Switch

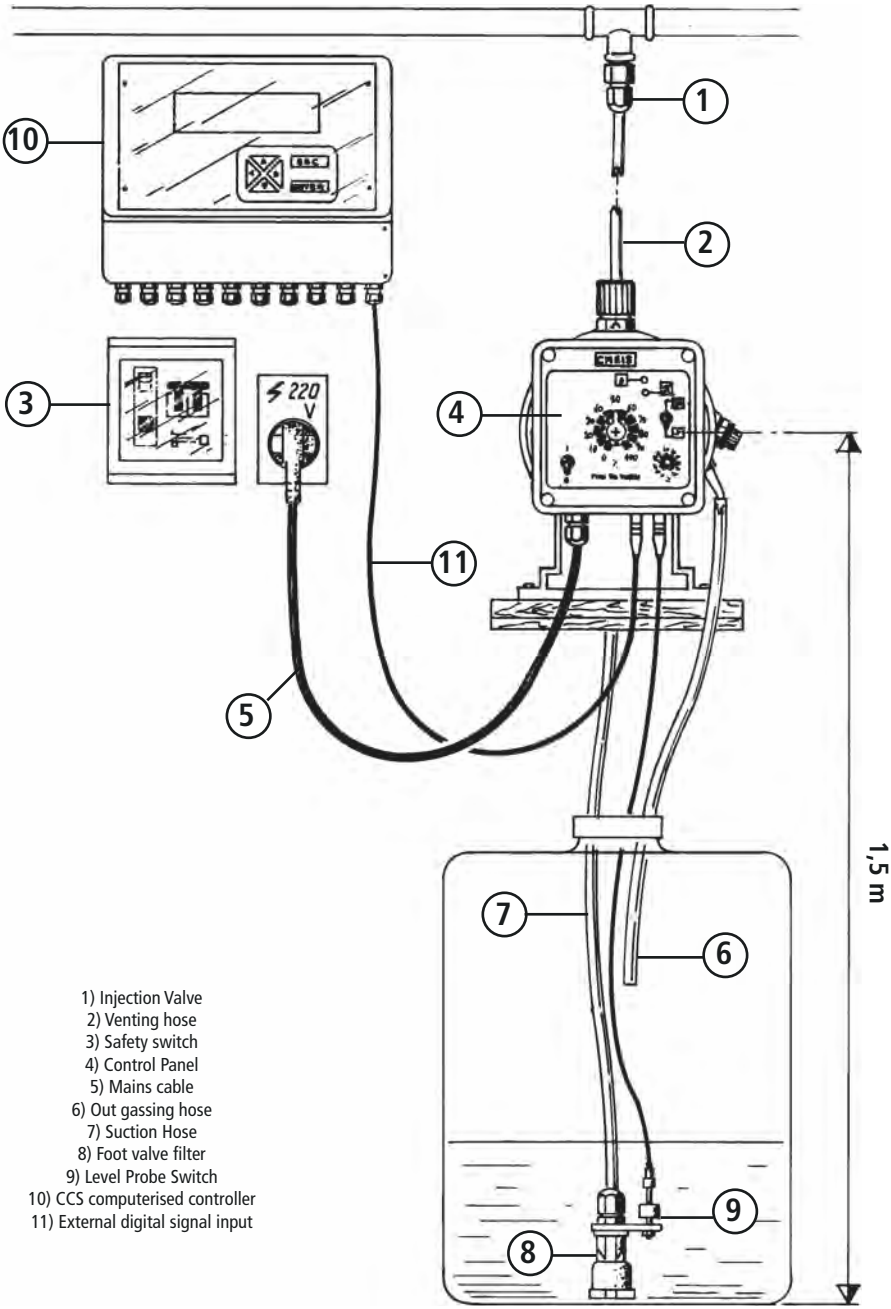

1) Injection Valve
2) Venting hose
3) Safety switch
4) Control Panel
5) Mains cable
6) Out gassing hose
7) Suction Hose
8) Foot valve filter
9) Level Probe Switch
10) CCS computerised controller
11) External digital signal input

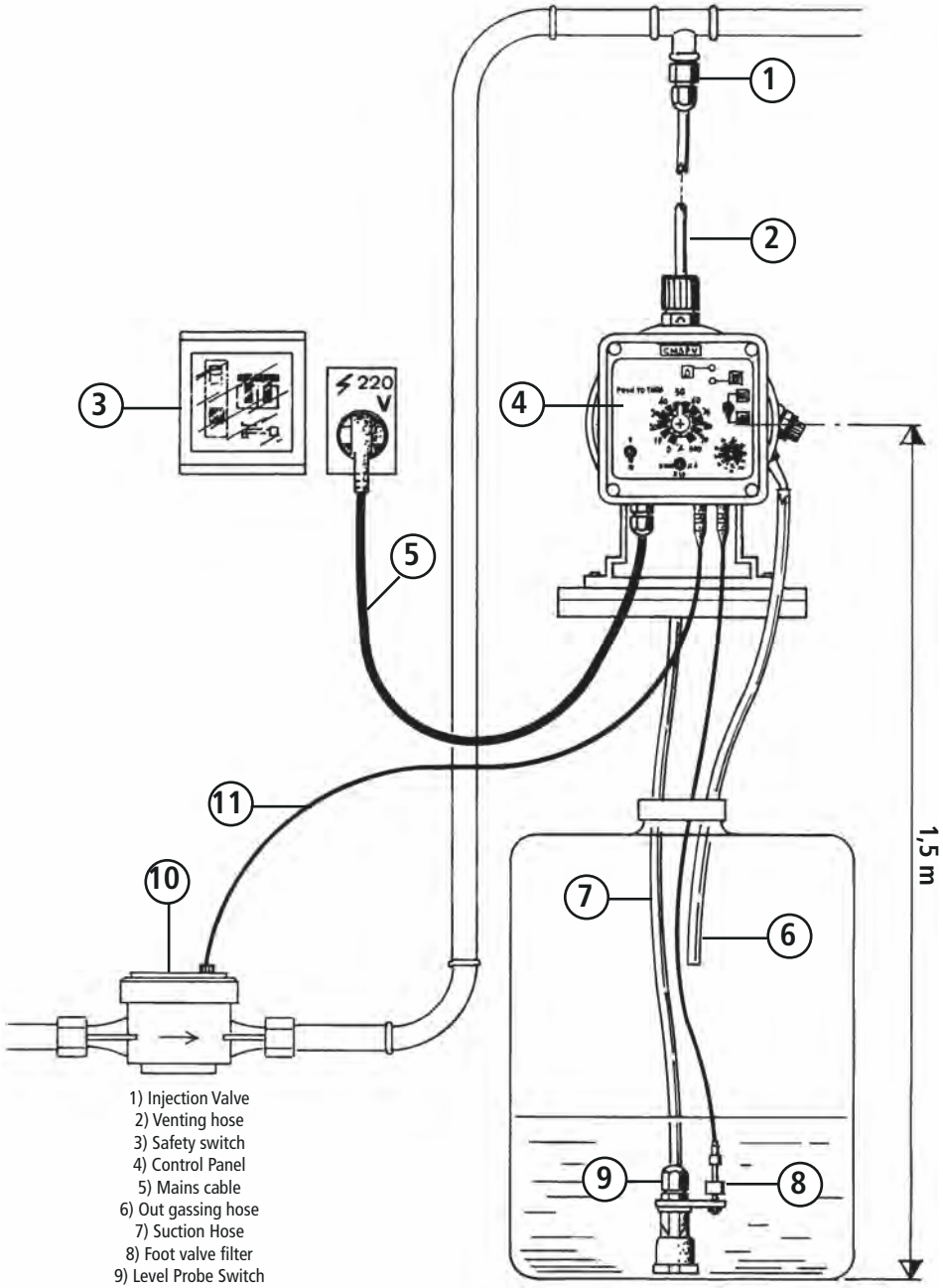

1) Injection Valve
2) Venting hose
3) Safety switch
4) Control Panel
5) Mains cable
6) Out gassing hose
7) Suction Hose
8) Foot valve filter
9) Level Probe Switch
10) Pulse emitting water meter

M. Exploded view

NOTICE: always specify the pump's label when ordering spare parts.

AMS - AMSA

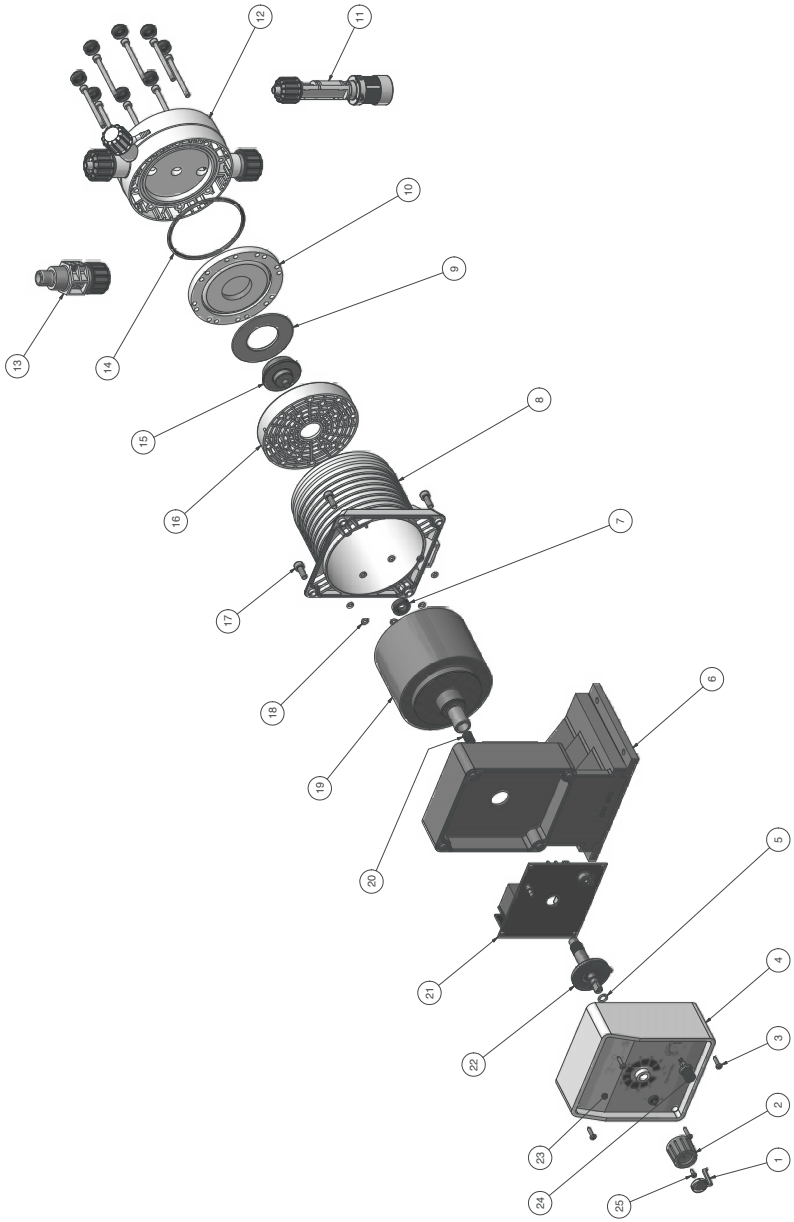

AMS AC

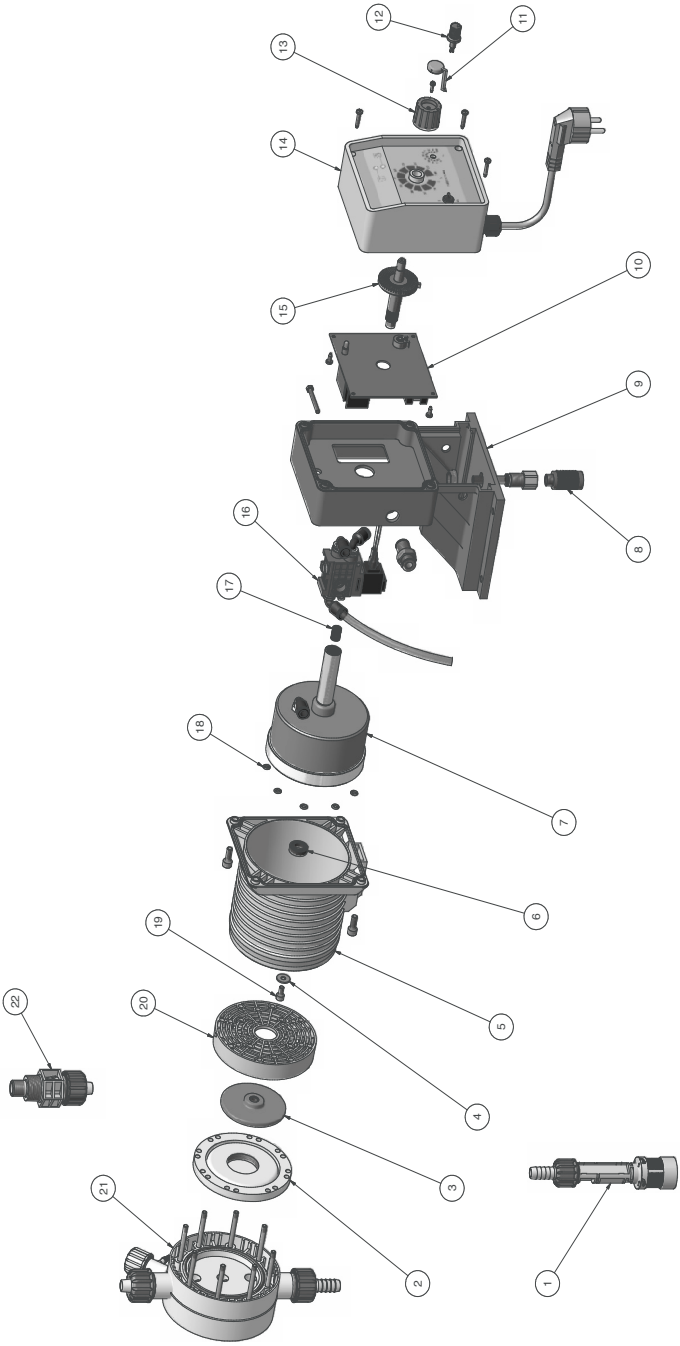

PRODUCT SERVICE REPAIR FORM

ENCLOSE THE PRESENT FORM TO THE DELIVERY NOTE

DATE .....

SENDER

Company name.....
Address .....
Phone no. .....
Contact person.....

PRODUCT TYPE (see product label)

DEVICE CODE .....
S/N (serial number).....

OPERATING CONDITIONS

Location/installation description .....
.....
Chemical .....
Start-up (date) ..... Running time (approx. hours).....

REMOVE ALL THE LIQUID INTO THE PUMP HEAD AND DRY IT BEFORE PACKAGING IN ITS ORIGINAL BOX.

DESCRIPTION OF PROBLEM

☐ MECHANICAL
- Wear parts.....
- Brekage/other damages .....
- Corrosion.....
- Other.....

☐ ELECTRICAL
- Connections, connector, cables .....
- Operating controls (keyboard, display, etc.) .....
- Elettronics.....
- Other.....

☐ LEAKS
- Connections.....
- Pump head .....

☐ NOT OR INADEQUATE FUNCTION/OTHER
.....
.....
.....

I declare that the dosing pump is free of any hazardous chemical.

Signature of the compiler

Company stamp

Index

GENERAL SAFETY GUIDELINES 2
PURPOSE OF USE AND SAFETY 3
ENVIRONMENTAL SAFETY 4
LABELS 4
SPARE PARTS 4

1. Introduction 6
2. Unpacking 7
3. Pump's description 8
4. Before to Install warnings 10
5. Installation draw 11
6. Hydraulic installation 12
7. Self-Venting pump head installation 15
8. Electrical Installation 16
9. Level alarm - Models 18
10. Priming 21
11. Troubleshooting 22
12. Fuse and main board replacement 23
13. Main Board 24
A Appendix. Maintenance 25
B Appendix. Construction Materials and Technical info 26
G Appendix. Installation draw for AMS CO 33
H Appendix. Installation draw for AMS CL 34
I Appendix. Installation draw for AMS IS 35
L Appendix. Installation draw for AMS PV 36
M. Exploded view 38

PRECAUTIONS RELATING TO DIRECTIVES, REGULATIONS AND STANDARDS

§ CE/EU and UKCA marking

We guarantee that this product meets the essential requirements of the applicable Directives and Regulations based on the following specifications. Please carefully consider the following specifications for use of the product in European Union member countries and the United Kingdom.

• CE/EU harmonized directives and standards

Directives
DIRECTIVE 2006/42/EC
DIRECTIVE 2014/35/EU
DIRECTIVE 2014/30/EU
DIRECTIVE 2011/65/EU
DELEGATED DIRECTIVE (EU) 2015/863

Harmonized standards
EN ISO 12100
EN 809
EN ISO 20361
EN IEC 61326-1
EN 61010-1
EN IEC 63000

• UKCA harmonized regulations and standards

Regulations
2008 No. 1597
2008 2016 No. 1091
2016 No. 1101
2012 No. 3032

Harmonized standards
BS EN ISO 12100
BS EN 809
BS EN ISO 20361
BS EN IEC 61326-1
BS EN 61010-1
BS EN IEC 63000

Disposal of end-of-life equipment by users

This symbol warns you not to dispose of the product with normal waste. Respect human health and the environment by giving the discarded equipment to a designated collection center for the recycling of electronic and electrical equipment. For more information visit the online site.

When dismantling a pump please separate material types and send them according to local recycling disposal requirements. We appreciate your efforts in supporting your local Recycle Environmental Program. Working together we'll form an active union to assure the world's invaluable resources are conserved.